DINGS'

Precision Motion Specialist

GENERAL CATALOG

PRODUCT CATEGORIES

- Linear Stepper Motors
- Rotary Stepper Motors
- Integrated Stepper Modules
- Electric Grippers
- Motion Controllers
- Custom Solutions
- Brushed DC Motors
- Brushed Coreless Motors
- Brushless DC Motors
- Slotless BLDC Motors
- Frameless Motors
- Voice Coil Motors

dingsmotion.com

Founded in 2008, Jiangsu DINGS' Intelligent Control Technology Co., Ltd. is guided by the philosophy, **"Quality stems from responsibility, and details determine success."**

As a global leader in precision linear motion, DINGS' delivers a comprehensive portfolio of precision stepper, DC and BLDC motors, voice coil motors, lead and ball screw linear actuators, PMSM motors for eco-mobility, and advanced motion controllers — setting new benchmarks in the global motion control market.

SCALE

300+	Advanced Machining Equipment	
40+	Automated Assembly Lines	
100+	Precision Testing & Analysis Systems	
140+	Patents & Intellectual Properties	

GROWTH

2008	Company Founded & DINGS' Brand Established
2010	DINGS' Motion USA Established
2016	DINGS' Korea Established
2019	Joined LEILI Group
2021	Changzhou Intelligent Manufacturing Plant Established Listed on China NEEQ Market
2022	Korea R&D Center Established
2023	Listed on Beijing Stock Exchange [Stock Code: 920593] DINGS' Korea Converted to Corporate Entity DINGS' Japan Established
2024	New Headquarters & Plant Established DINGS' Motion Europe Established
2025	Thailand Manufacturing Facility Established
2026	DINGS' Motion Europe Austria Branch Established

CERTIFICATIONS

ISO 9001 — Quality

ISO 14001 — Environmental

ISO 45001 — Health & Safety

ISO 13485 — Medical Device Quality

ISO/IEC 17025 — Laboratory Accreditation

IATF16949 — Automotive Quality

IPMS — Intellectual Property

CE — Safety Standards

RoHS COMPLIANT — Environmental Standards - RoHS

REACH NPS — Environmental Standards - REACH

PRODUCT WARRANTY

Warranty period: 1 year from shipment.

Free repair is provided for defects in materials or workmanship under normal use.

Warranty does not apply to:

- Warranty expiration or damaged/lost nameplates
- Improper installation or operating conditions
- Unauthorized disassembly or modification
- Repairs conducted outside of official service channels
- Force majeure, including natural disasters

DINGS' is committed to quality, reliability, and responsibility

— delivering high-performance motion solutions built on precision engineering.

dingsmotion.com

A Lead Screw Linear Actuator

Stepper Lead Screw Linear Actuator

Part number construction	A-2
Lead screw code selection	A-3
Product selection guide	A-4
Technology overview	A-5
General specifications	A-11
6 · 14 mm	A-12
8 · 20 mm	A-15
11 · 28 mm	A-19
14 · 35 mm	A-23
17 · 42 mm	A-29
23 · 57 mm	A-35
24 · 60 mm	A-41
34 · 86 mm	A-47
Accessories and options	A-49
Installation guide	A-56
Troubleshooting	A-58

Stepper Ball Screw Linear Actuator

Part number construction	A-60
Ball screw lead code selection	A-61
6 · 14 mm	A-62
8 · 20 mm	A-64
11 · 28 mm	A-66
14 · 35 mm	A-68
17 · 42 mm	A-71
23 · 57 mm	A-74
Accessories and options	A-77
Installation guide	A-80

PM Stepper Linear Actuator

Part number construction	A-82
Product overview	A-83
15 mm	A-84
20 mm	A-86
25 mm	A-90
36 mm	A-94
46 mm	A-98

B Hybrid Rotary Stepper Motor

Part number construction	B-2

2-phase Hybrid Rotary Stepper Motor

Product overview	B-4
6 · 14 mm	B-5
8 · 20 mm	B-7
14 · 35 mm	B-11
17 · 42 mm	B-13
23 · 57 mm	B-16
24 · 60 mm	B-20
34 · 86 mm	B-23

5-phase Hybrid Rotary Stepper Motor

Product overview	B-26
11 · 28 mm	B-27
17 · 42 mm	B-29
24 · 60 mm	B-32
Accessories and options	B-33

C Hollow Shaft Stepper Motor

Part number construction	C-2
Product overview	C-3
6 · 14 mm	C-4
8 · 20 mm	C-5
11 · 28 mm	C-6
14 · 35 mm	C-7
17 · 42 mm	C-8
23 · 57 mm	C-9
24 · 60 mm	C-10
34 · 86 mm	C-11

D Brushed DC Motor

Part number construction	D-2
42 mm	D-3
50 mm	D-5
63 mm	D-7
80 mm	D-9
Accessories and options	D-11

E Brushed Coreless DC Motor

Part number construction	E-2
8 mm	E-3
10 mm	E-5
16 mm	E-7
25 mm	E-9
40 mm	E-11

F Brushless DC Motor

Part number construction	F-2
16 mm	F-3
22 mm	F-5
28 mm	F-7
36 mm	F-9
42 mm	F-11
57 mm	F-15
60 mm	F-18
86 mm	F-21
110 mm	F-24
Accessories and options	F-26

G Slotless BLDC Motor

Part number construction	G-2
6 mm	G-3
8 mm	G-5
10 mm	G-7
12 mm	G-9
13 mm	G-11
14 mm	G-13
16 mm	G-15
22 mm	G-17
28 mm	G-19
30 mm	G-21
36 mm	G-23
42 mm	G-25
Accessories and options	G-27

H Frameless Motor

Part number construction	H-2
25 mm	H-3
38 mm	H-5
43 mm	H-8
50 mm	H-10
60 mm	H-13
70 mm	H-15
85 mm	H-18
115 mm	H-21

I Linear Module Series

DLM / LR-DLM Series

Part number construction : DLM	I-3
Part number construction : LR-DLM	I-4
14 mm DLM	I-5
20 mm DLM / LR-DLM	I-8
28 mm DLM / LR-DLM	I-12
35 mm DLM / LR-DLM	I-16
42 mm DLM / LR-DLM	I-22
57 mm DLM / LR-DLM	I-28

DSM Series

Part number construction	I-35
14 mm	I-36
20 mm	I-38
28 mm	I-40
35 mm	I-42
42 mm	I-44

DSLM Series

Part number construction	I-47
35 mm	I-48
42 mm	I-49
57 mm	I-50

DWM Series

Part number construction	I-52
20 mm	I-53
28 mm	I-56
35 mm	I-59
42 mm	I-63
57 mm	I-67

DMP Series

DMP 15	I-72
DMP 20	I-74
DMP 30	I-76
DMP 50	I-78
DMP 75	I-80
DMP 100	I-82

J Gripper

Part number construction	J-2
20 mm - Stroke 6mm	J-3
28 mm - Stroke 6mm / 12mm	J-5
35 mm	J-8
42 mm	J-10

K Voice Coil Motor · Actuator

Part number construction	K-2
12.7 mm Voice coil motor	K-3
13.2 mm Voice coil actuator	K-4
25.4 mm Voice coil motor	K-5
30 mm Voice coil actuator	K-7
38 mm Voice coil motor	K-11
40 mm Voice coil actuator	K-12
45 mm Voice coil motor	K-13
60 mm Voice coil motor	K-14
60 mm Voice coil actuator [Position sensor integrated]	K-15
90 mm Voice coil actuator [Position sensor integrated]	K-16
76 mm Flat voice coil motor	K-17
97 mm Flat voice coil motor	K-18

L Motion Controller

Part number construction	
Standalone stepper motor driver	L-2
Integrated stepper motor driver	L-3
Standalone stepper motor drivers	L-4
BLDC · VCM control drivers	L-22
Integrated stepper motor drivers	L-26

Customization Options

Coreless push rod actuator	L-31
DC servo motor	L-32
Outer rotor motor	L-33
IP54 rating protection solution	L-34
DLG/DRS ball screw linear actuator	L-35
Brushless DC blower motor	L-36
New energy main drive motor	L-37

A Lead Screw Linear Actuator

DINGS' offers a comprehensive range of Lead Screw Linear Actuators designed for equipment requiring high performance and long-term durability in compact form factors.

These actuators convert motor rotary motion directly into linear motion through an integrated internal mechanism, reducing the need for external components such as belts, gears, racks, or couplings. This simplifies system design, reduces cost and assembly time, and minimizes precision loss—resulting in improved space efficiency and positioning accuracy.

Compact, quiet, and efficient, DINGS' Lead Screw Linear Actuators are ideal for applications requiring precise positioning, fast response, and high durability. They support strokes up to 500 mm, a minimum step resolution of 0.0015 mm, and maximum load capacities exceeding 200 kgf.

Typical applications include X-Y positioning tables, medical devices, semiconductor equipment, and industrial automation systems. Customization options such as IP-rated protection, brakes, encoders, ball screw configurations, and hollow shaft designs are available to meet diverse application requirements.

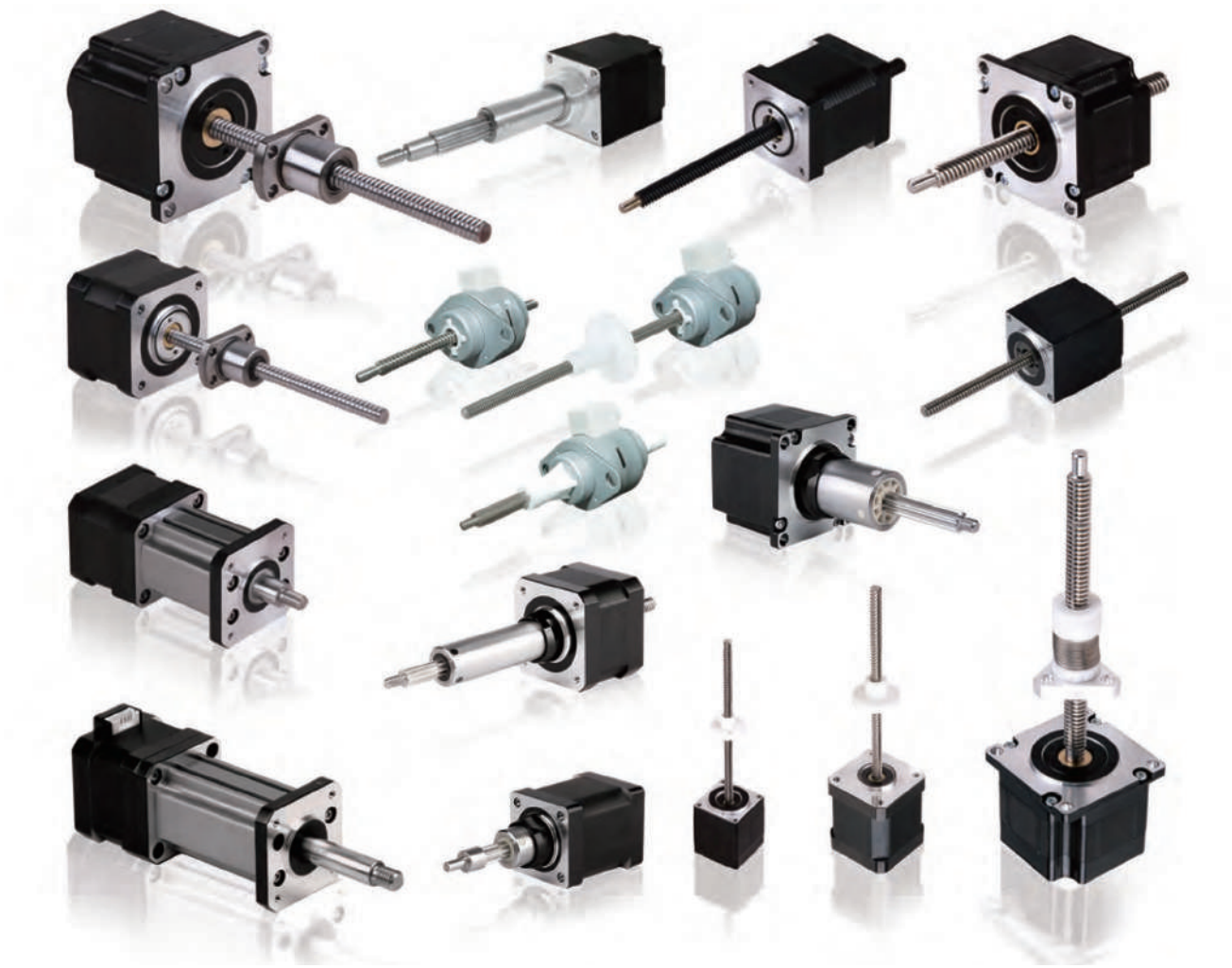

Stepper Lead Screw Linear Actuator

DINGS' Lead Screw Stepper Motor Linear Actuators are available in eight frame sizes, ranging from 14 mm (NEMA 6) to 86 mm (NEMA 34). The product lineup includes four configurations—External, Non-Captive, Electric Cylinder (Captive), and Kaptive—allowing flexible adaptation to a wide range of application environments.
These actuators offer travel distances per step from 0.0015 mm (0.00006 in) to 0.127 mm (0.005 in), and even finer positioning control can be achieved when used with microstepping drives. Maximum thrust reaches up to 2,400 N. Encoder options are available across the entire series, along with additional options such as brakes, Teflon coating, and manual knobs to meet specific application requirements.

Part number construction	A-2
Lead screw code selection	A-3
Product selection guide	A-4
Technology overview	A-5
General specifications	A-11
6 · 14 mm	A-12
8 · 20 mm	A-15
11 · 28 mm	A-19
14 · 35 mm	A-23
17 · 42 mm	A-29
23 · 57 mm	A-35
24 · 60 mm	A-41
34 · 86 mm	A-47
Accessories and options	A-49
Installation guide	A-56
Troubleshooting	A-58

Part Number Construction

17	N	2	1	15	K	4	-	101.6	T	M	S	EK2	-	001
①	②	③	④	⑤	⑥	⑦		⑧	⑨	⑩	⑪	⑫		⑬

① Motor Size

Motor Size (mm)	14	20	28	35	42	57	60	86
Motor Size (NEMA)	6	8	11	14	17	23	24	34

② Linear Actuator Type
- E = External Linear Actuator
- N = Non-Captive Linear Actuator
- C = Electric Cylinder (Captive) Linear Actuator
- K = Kaptive Linear Actuator

③ Motor Step Angle
- 2 = 2-phase, 1.8° step angle
- 4 = 2-phase, 0.9° step angle
- 5 = 5-phase, 0.72° step angle

④ Motor Length
- 1 = Single stack
- 2 = Double stack
- 3 = Triple stack

⑤ Rated Current/Phase
- XX = X.X(A)/Phase

⑥ Lead Screw Code
- Please refer to the lead screw code selection table

⑦ Number of Lead Wires
- 4 = 4-wire leads
- 6 = 6-wire leads
- 8 = 8-wire leads

⑧ Lead Screw Length / Stroke
- XXX = XXX mm Lead screw length
  [For External / Non-Captive type]
- XXX = X.XX inch stroke
  [For Electric Cylinder(Captive) / Kaptive type]

※ Captive/Kaptive: standard strokes by motor size.

⑨ Lead Screw Surface Treatment
- T = Teflon coating
- S = Standard (No teflon coating)
- K = Electroplated teflon coating
- C = Customization

※ Surface treatment depends on lead and application.

⑩ End Machining
- M = Metric
- U = UNC
- S = Smooth
- C = Custom
  [Please provide the required customization specifications.]
- N = None

⑪ Nut Style
- S = Standard flange nut [For External type]
- A = Anti-backlash nut [For External / Non-Captive type]
- C = Customization

⑫ Option
- EKX = Encoder [X = Encoder Resolution]
- P = Manual knob
- B = Brake
- X = Rear shaft
- R = Encoder ready
- C = Customization
- N = No rear-end machining

⑬ Customer Sequence Number

Example

Part Number	17N2115K4-101.6TMSEK2
Description	NEMA17 [42mm] Non-Captive linear actuator 2-phase, 1.8° step angle stepper motor Single stack 1.5A/phase "K" screw lead [0.1" or 2.54 mm lead] 4-wire leads Screw length : 101.6mm Teflon-coated screw Metric screw end machining Standard nut EK2 incremental encoder, 192-line resolution

Lead Screw Code Selection

Lead Code	1.8 degree motor travel per step inch (mm)	Motor size (mm)												
		14	14 / 20		28		35 / 42			57 / 60				86
		Screw Dia. inch (mm)												
		Φ2.5 (0.098″)	Φ3 (0.118″)	Φ3.5 (0.138″)	Φ4.77 (0.188″)	Φ5.56 (0.218″)	Φ6 (0.236″)	Φ6.35 (0.25″)	Φ8 (0.315″)	Φ9.525 (0.375″)	Φ10 (0.394″)	Φ12 (0.472″)	Φ12.7 (0.5″)	Φ15.875 (0.625″)
AL	0.000063″ (0.001588)				0.0125″ (0.3175)									
AA	0.00012″ (0.003048)			0.024″ (0.6096)				0.024″ (0.6096)						
A	0.000125″ (0.003175)				0.025″ (0.635)			0.025″ (0.635)		0.025″ (0.635)				
B	0.00024″ (0.006096)			0.048″ (1.2192)				0.048″ (1.2192)						
D	0.00025″ (0.00635)				0.05″* (1.27)			0.05″ (1.27)		0.05″ (1.27)				
F	0.0003125″ (0.0079375)				0.0625″ (1.5875)			0.0625″* (1.5875)		0.0625″ (1.5875)				
H	0.000416″ (0.010583)									0.083″ (2.1167)				
J	0.00048″ (0.012192)			0.096″ (2.4384)		0.096″ (2.4384)		0.096″ (2.4384)						
K	0.0005″ (0.0127)				0.1″ (2.54)			0.1″* (2.54)		0.1″* (2.54)				0.1″ (2.54)
L	0.000625″ (0.015875)							0.125″ (3.175)		0.125″ (3.175)				0.125″ (3.175)
P	0.000833″ (0.021167)									0.167″ (4.2333)				
Q	0.00096″ (0.024384)				0.192″ (4.8768)	0.192″ (4.8768)		0.192″ (4.8768)						
R	0.001″ (0.0254)				0.2″ (5.08)			0.2″ (5.08)		0.2″ (5.08)				0.2″ (5.08)
S	0.00125″ (0.03175)							0.25″ (6.35)		0.25″ (6.35)				0.25″ (6.35)
U	0.0016667″ (0.042334)							0.3333″ (8.4667)						
V	0.001875″ (0.047625)									0.375″ (9.525)				
W	0.00192″ (0.048768)							0.384″ (9.7536)		0.384″ (9.7536)				
X	0.002″ (0.0508)				0.4″ (10.16)					0.4″ (10.16)				
Y	0.0025″ (0.0635)							0.5″ (12.7)		0.5″ (12.7)				0.5″ (12.7)
Z	0.005″ (0.127)							1.0″ (25.4)		1.0″ (25.4)			1.0″ (25.4)	1.0″ (25.4)
AF	0.000059″ (0.0015)			0.0118″ (0.3)										
AB	0.000197″ (0.005)	0.0394″ (1.0)		0.0394″ (1.0)			0.0394″ (1.0)	0.0394″ (1.0)	0.0394″ (1.0)					
G	0.000394″ (0.01)			0.0787″* (2.0)				0.0787″ (2.0)	0.0787″ (2.0)		0.0787″ (2.0)	0.0787″ (2.0)		
M	0.000787″ (0.02)			0.1575″ (4.0)					0.1575″ (4.0)					
T	0.001575″ (0.04)			0.3150″ (8.0)					0.3150″ (8.0)					
E	0.000985″ (0.025)						0.1969″ (5.0)		0.1969″ (5.0)			0.1969″ (5.0)		
C	0.00197″ (0.05)								0.3937″ (10.0)		0.3937″ (10.0)	0.3937″ (10.0)		
I	0.00394″ (0.1)										0.7874″ (20.0)			
N	0.000156″ (0.00397)							0.0313″ (0.794)						
CE	0.002948″ (0.075)											0.5096″ (15.0)		
IE	0.0049215″ (0.125)											0.9843″ (25.0)		
AC	0.000937″ (0.0238)				0.1874″ (4.76)									
AD	0.000099″ (0.0025)		0.0197″ (0.5)											

Note : The data in [ ] refers to the conversion between metric and imperial systems. When the division is incomplete, rounding is used to retain four significant digits.
Optional left handed rotation with * lead

Product Selection Guide

To reduce complexity and cost of a design, it is important to accurately size a motor / lead screw combination. Below are a few simple steps in selecting the necessary components for a given application.

STEP 1 – CHOOSING A MOTOR SIZE (FORCE REQUIREMENTS)

Here is a general overview of the output thrust vs. motor size:

	Motor Sizes (mm)	Max Thrust (N)	Recommended Load Limit (N)
Lead Screw Linear Actuators	14	19	15
	20	70	45
	28	150	140
	35	300	230
	42	600	230
	57	1300	910
	60	1560	910
	86	2400	2270

As the size of the motor increases, the output thrust of the motor correspondingly increases.

STEP 2 – CHOOSING A SCREW LEAD (FORCE AND SPEED REQUIREMENTS)

After estimating the required thrust and choosing a motor size that may fit your application, the speed and acceleration of the load must be considered and evaluated to choose an appropriate screw lead.

Due to the nature of lead screws, the output speed and output thrust achievable by a motor/lead screw combination are inversely proportional. (i.e., increasing the required thrust will lower the achievable speed for a motor/lead screw combination). As speed increases, the available thrust decreases.

For detailed motor/lead screw selection data, please refer to the speed vs. thrust curves for each motor size.

Although these two steps provide a solid foundation in motor/lead screw selection, other variables must also be considered:

- Duty Cycle
- Desired Life of a System
- Environmental Considerations
- Positional Repeatability
- Acceptable Backlash
- Acceleration/Deceleration
- Driver Specifications
- Vertical or Horizontal Orientation

Because numerous variables must be considered during motor selection, it is highly recommended for users to proceed with physical testing to accurately determine the motor/lead screw combination required for a given application.

NOTE : **Although this section aims to provide a rough guideline to select a motor/lead screw combination that best fits an application, we recommend to contact our application engineering staff or sales representatives for further assistance with the motor selection process.**

Technology Overview

One of the most common methods of moving a load from point A to point B is through linear translation of a motor by a mechanical lead screw and nut. This section provides an overview of the basic principles of lead screw technology prior to selecting the system that is best for your application.

Some basic design considerations are as follows:

1. What is the load of your system?
2. What is the required linear speed?
3. What is the distance to be travelled?
4. What accuracy does your application require?
5. What is the required time to move from point A to point B?
6. What repeatability does your application require?
7. Horizontal vs vertical orientation?

TERMINOLOGY

- **LINEAR ACTUATOR TYPES**
  A. External Linear
  B. Non-captive
  C. Electric Cylinder (Captive)
  D. Kaptive

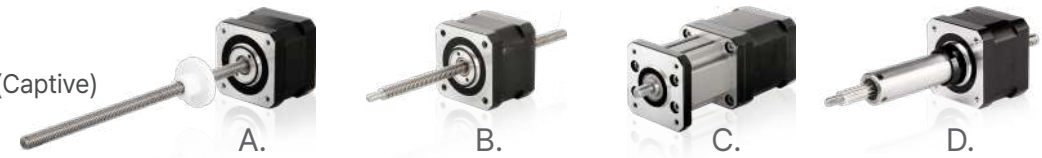

- **LEAD**
  Lead refers to the linear distance the nut travels axially during one complete revolution of the screw.
  A larger lead increases the linear travel distance per revolution and generally allows higher travel speed.
  Lead is calculated by multiplying the pitch by the number of starts.

- **PITCH**
  Pitch refers to the axial distance between adjacent threads.
  In a single-start screw, the pitch is equal to the lead, while in a multi-start screw the lead is greater than the pitch.
  Multi-start screw designs generally provide higher travel efficiency and smoother power transmission characteristics.

- **ACCURACY OF SCREW**
  Lead screw accuracy refers to the cumulative deviation between the theoretical travel distance and the actual travel distance over a specified reference length.
  For example, a screw with a lead accuracy of 0.004 inch/foot may exhibit a positional deviation of up to ±0.004 inch over one foot of travel. Lead screw accuracy is a critical factor that directly affects the positioning accuracy and repeatability of the overall motion system.

- **POSITION TOLERANCE**
  Position tolerance refers to the deviation between the theoretical target position and the actual traveled position. Position deviation may be affected by the mechanical structure, lead screw accuracy, and assembly condition of the system.

- **REPEATABILITY**
  Repeatability refers to the ability of a system to repeatedly return to the same target position. In most motion control systems, repeatability is often considered more important than absolute positioning accuracy.

- **HORIZONTAL OR VERTICAL APPLICATION**
  In vertical applications, backdriving may occur when motor power is removed or when no braking mechanism is applied. Additional gravitational load conditions should also be considered during system design.

- **TOTAL INDICATED RUNOUT**
  Total indicated runout refers to the total rotational deviation measured around the screw centerline. Runout may affect system vibration, noise, and positioning accuracy.

Technology Overview

- **VIBRATION AND NOISE**
  Resonance in hybrid stepper motors typically occurs around the 200 PPS operating range.
  Microstepping control is effective in reducing vibration and audible noise within this range.
- **STATIC LOAD**
  Maximum allowable thrust load that can be applied to a stationary screw, including shock loading.
- **DYNAMIC LOAD**
  Maximum recommended thrust load that can be continuously applied while the screw is in motion.
- **DRIVER**
  Stepper motors require external drives for operation.
  Most commercial drive products integrate power circuits, logic circuits, switching components, and pulse control functions.
- **HOLDING TORQUE**
  Maximum torque the motor can maintain while stationary with current applied.
- **ROTOR INERTIA**
  Rotational inertia generated during acceleration and deceleration.
- **TRAVEL PER STEP**
  Linear travel distance generated during one full motor step.
- **TEMPERATURE RISE**
  Increase in motor temperature during operation.
- **STEP RESPONSE**
  Time required for the motor to complete one step movement.
- **STEP**
  Basic operating increment of a stepper motor in which the rotor rotates by a fixed angle according to phase commutation.
- **STEP ANGLE**
  Angular displacement generated by one motor step.
- **PULL OUT TORQUE**
  Maximum torque at which the motor can start, stop, and reverse synchronously with input pulses.
- **PULL IN TORQUE**
  Maximum torque at which the motor can start and stop synchronously with input pulses, without the use of acceleration or deceleration.
- **EFFICIENCY**
  The ratio of useful output energy to total input energy of a system.
- **RESOLUTION**
  Minimum incremental linear movement of the actuator output shaft per input pulse.
- **TENSION OR COMPRESSION LOADING**
  A load that tends to stretch the screw is referred to as a tension load,
  while a load that compresses the screw is referred to as a compression load.
  Under compression loading conditions, the screw should be designed with consideration for axial strength against column loading.

Technology Overview

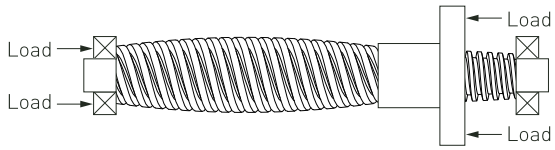

Compression Loading

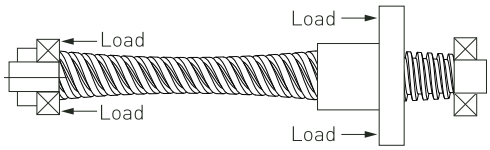

Tension Loading

- **RADIAL LOAD**
  Load applied perpendicular to the screw axis.
  The use of additional support mechanisms such as linear guides is recommended.

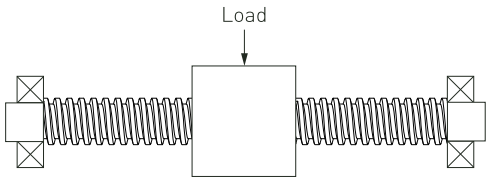

Radial Loading
(Avoid or Minimize)

- **AXIAL LOAD**
  Load applied along the centerline direction of the lead screw.

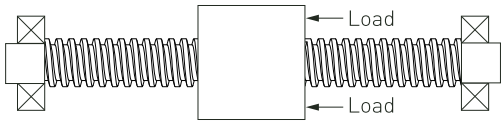

Axial Center Loading
(best)

- **BACKDRIVING**
  Phenomenon in which axial load causes the screw or nut to rotate in the reverse direction.
  Lead screws with efficiencies above 50% generally have a higher tendency to backdrive, while lead screws with efficiencies below 35% are more effective in preventing this condition.
  Smaller lead values can further reduce the possibility of backdriving or free rotation, and vertical systems are generally more susceptible to backdriving due to gravity.

- **TORQUE**
  Motor torque required to drive a lead screw is composed of the following components.
  1. Inertia torque
  2. Drag torque (friction between the nut and screw during operation)
  3. Torque required to move the load

- **LUBRICATION**
  The nut material (Delrin) incorporates self-lubricating properties that minimize the need for additional lubrication. Teflon-coated screw options can further reduce friction and help extend overall system life.

- **END MACHINING OF THE SCREW (Please refer to A-49)**
  Standard metric and inch end machining options are available. Custom end machining specifications are also supported according to customer requirements. Please contact DINGS' for additional information.

Technology Overview

- **FIXITY**
  The performance of a lead screw system, including speed and efficiency, may be affected by how the screw ends are mounted and supported.

Type of End Fixity	Relative Rigidity	Critical Speed Factor	Critical Rod Factor
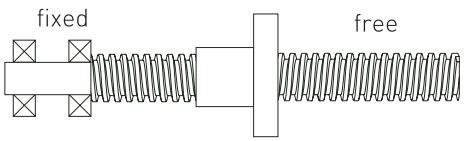	Less Rigid	0.32	0.25
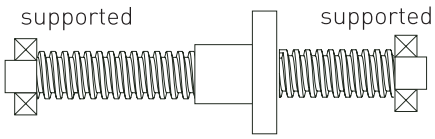	Rigid	1.0	1.0
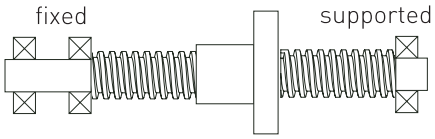	More Rigid	1.55	2.0
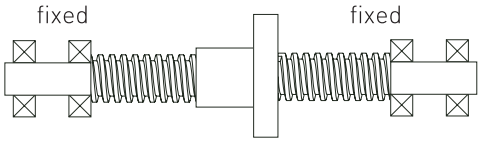	Most Rigid	2.24	4.0

- **COLUMN STRENGTH**
  When a screw is subjected to compression loading, it may exceed its elastic stability limit and become bent or deformed.

- **CRITICAL SPEED**
  Rotational speed at which the screw first reaches its resonance region due to screw deflection or instability. Within this speed range, vibration and unstable system behavior may occur. Critical speed may be affected by the following factors.

  1. Screw lead
  2. Rotational speed
  3. End support condition
  4. Thrust load
  5. Screw diameter
  6. Tension or compression loading

  For example, a screw with a diameter of 19.05 mm (0.75 inch) and a length of 1778 mm (70 inch) has a critical speed of approximately 187 RPM under the conditions of safety factor K = 1.25 and FS = 0.32.

Technology Overview

- **CRITICAL ROTATION SPEED (RPM) VS. UNSUPPORTED SCREW LENGTH FOR VARIOUS SCREW DIAMETERS (INCH)**

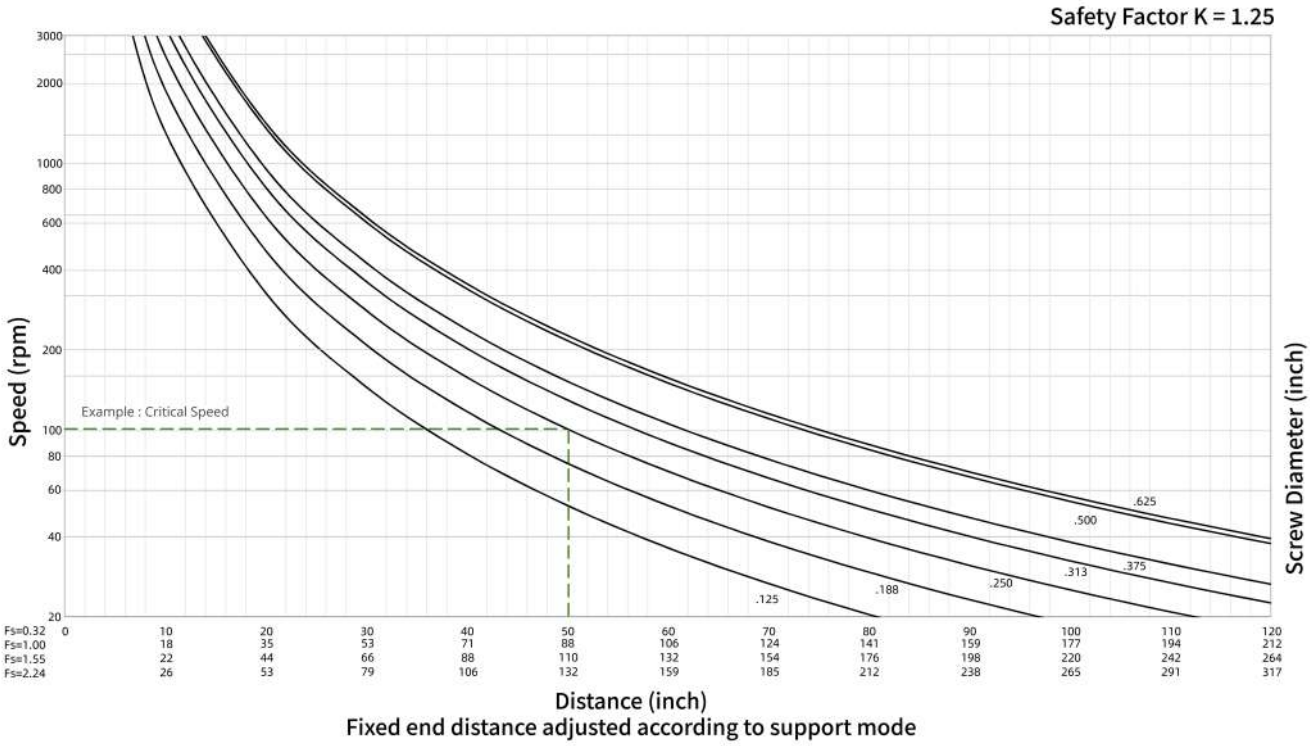

- **BACKLASH**

Relative axial clearance generated between the screw and nut. It is normal for backlash to gradually increase over time with continued use. Backlash compensation can be minimized through the use of anti-backlash nuts, and backlash primarily affects bidirectional positioning accuracy.

Standard Nut

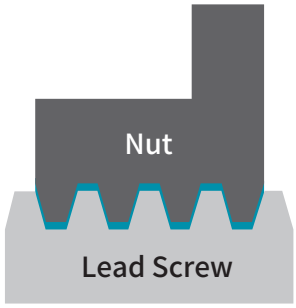

Tension Anti-Backlash Nut

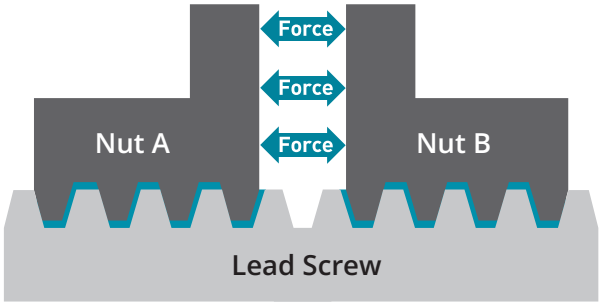

Compression Anti-Backlash Nut

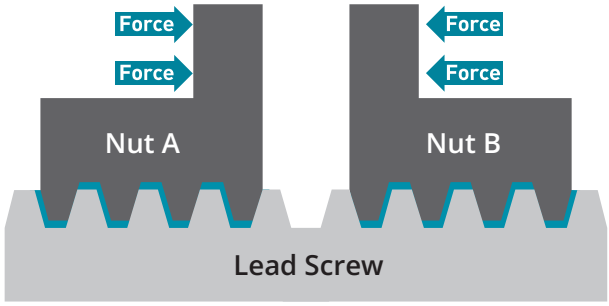

BACKLASH IN BLUE

Technology Overview

Stepper motor : Outlet mode

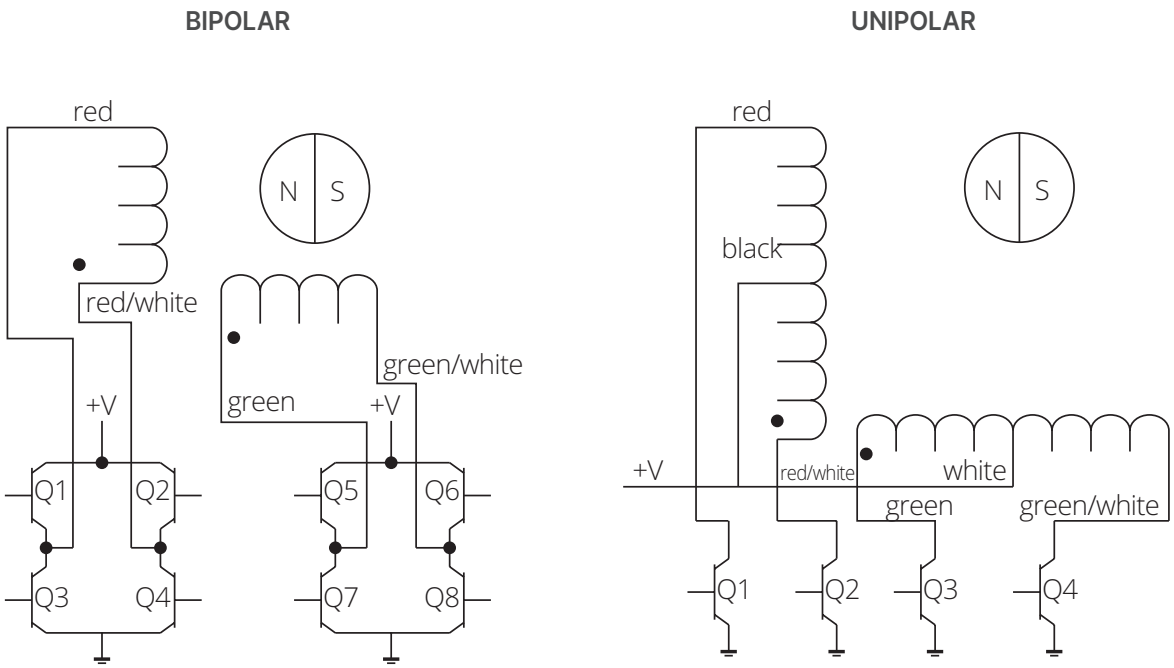

Stepper motor : Step sequence

Bipolar	Q2-Q3	Q1-Q4	Q6-Q7	Q5-Q8
Unipolar	Q1	Q2	Q3	Q4
Step				
1	ON	Off	ON	Off
2	Off	ON	ON	Off
3	Off	ON	Off	ON
4	ON	Off	Off	ON
5	ON	Off	ON	Off

→EXTEND CW →

→RETRACT CCW →

Note: Inserting an off state in phase sequence conversion can achieve half step stepping

General Specifications

All reference to lead screws in this catalog have the following characterisitics

Lead Screw Material	303 Stainless precision cold rolled steel
Screw Coating	Standard lead screws are coated with a thin layer of grease. Teflon coating is optional.
Standard Screw Accuracy (Lead Accuracy)	0.0071 inch / foot (0.18 mm / 300 mm)
Screw Straightness	0.15 mm / 300 mm
Screw Efficiency	From 35% to 85% dependent on lead. Also depends on the usage of an anti backlash nut with screw. The larger lead, higher efficiency of the screw.
Operating Temperature	-20°to 55°C
Storage Temperature	Storage at room temperature with a relative humidity as lower than 75%, clean, well ventilated and free from corrosive gases.
Screw Backlash	Generally around 0.01~0.1 mm
System Backlash	Includes screw, motor, and attached mechanics. This will be the sum of all backlash in customer's motion axis.
Nut Material	POM/PBT with Self-Lubricating material.
Wear Life of Screw and Nut	Depending on the load, speed, and environment, it is typically millions of cycles.

NOTE: DINGS' linear system are manufactured from high quality materials. Because of the variable effects of friction, lubrication and cleanliness, an exact life cannot be predicted for a given application.

For more information, contact your local DINGS' representative (see the back cover).

Size 6 (14mm) Series

Size 6 [14mm] Stepper Lead Screw Linear Actuator occupies a mounting footprint of 14mm square and provides 19N of Max. thrust force.

Motor Characteristics

Motor	Voltage (V)	Current (A [RMS])	Resistance (Ω)	Inductance (mH)	Weight (g)	Lead Wire No.	Motor Length (mm)
6-2103	6.6	0.25	22	4.5	60	4	32

Note : Motor Insulation Class B, Motor Temperature Rise 80°C, Ambient Temperature -20°C~55°C

Available Lead Screw and Travel per Step

Screw Dia. (inch)	Screw Dia. (mm)	Lead (inch)	Lead (mm)	Lead Code	Travel Per Step @1.8° (mm)*
0.138	3.5	0.024	0.6096	AA	0.003
0.138	3.5	0.048	1.2192	B	0.0061
0.138	3.5	0.096	2.4384	J	0.0122
0.138	3.5	0.0118	0.3	AF	0.0015
0.098 / 0.138	2.5 / 3.24	0.0394	1	AB*	0.005
0.138	3.5	0.0787	2	G	0.01
0.138	3.5	0.1575	4	M	0.02
0.138	3.5	0.315	8	T	0.04
0.098 / 0.118	2.5 / 3	0.0197	0.5	AD	0.0025

* Motor wiring and screw lead could be customized according to customer's request
* Through axis and fixed axis can only be selected φ 2.5mm screw assembly
* For Kaptive type, screw code AB only applicable

* Value Truncated

Dimensional Drawings : External Actuator

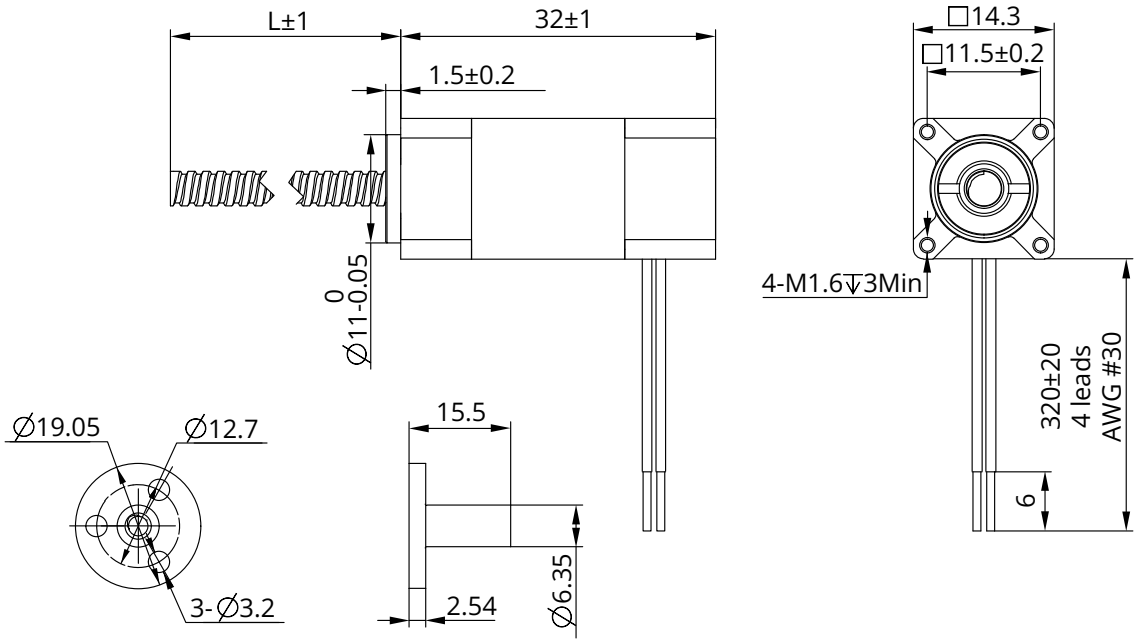

Note : All drawings are 1st-angle projection - ISO Compliant (3D models available)

Size 6 (14mm) Series

Dimensional Drawings : Non-Captive Actuator

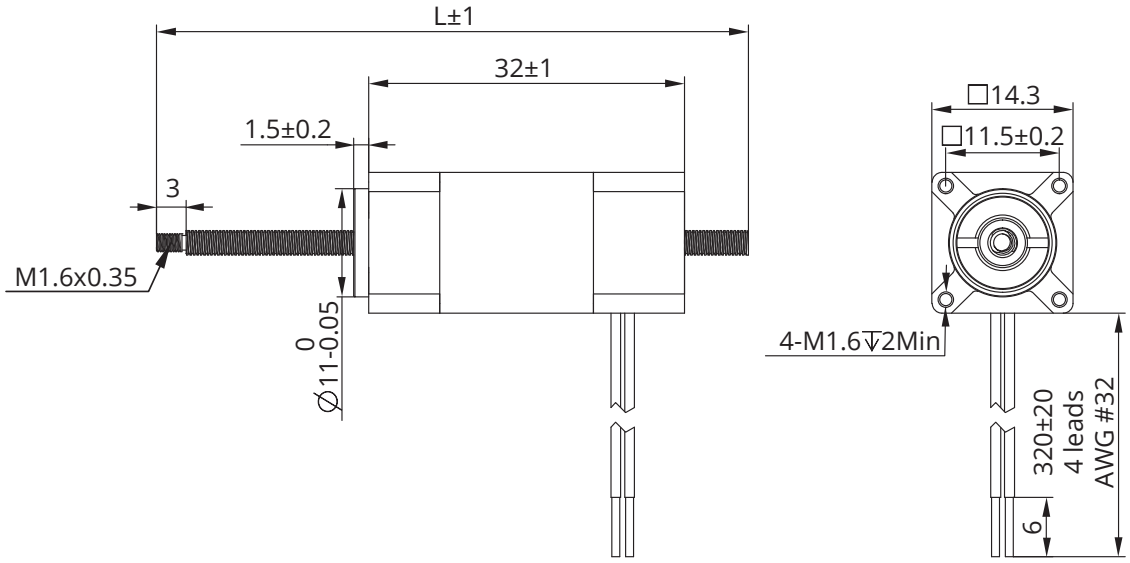

Dimensional Drawings : Kaptive Actuator

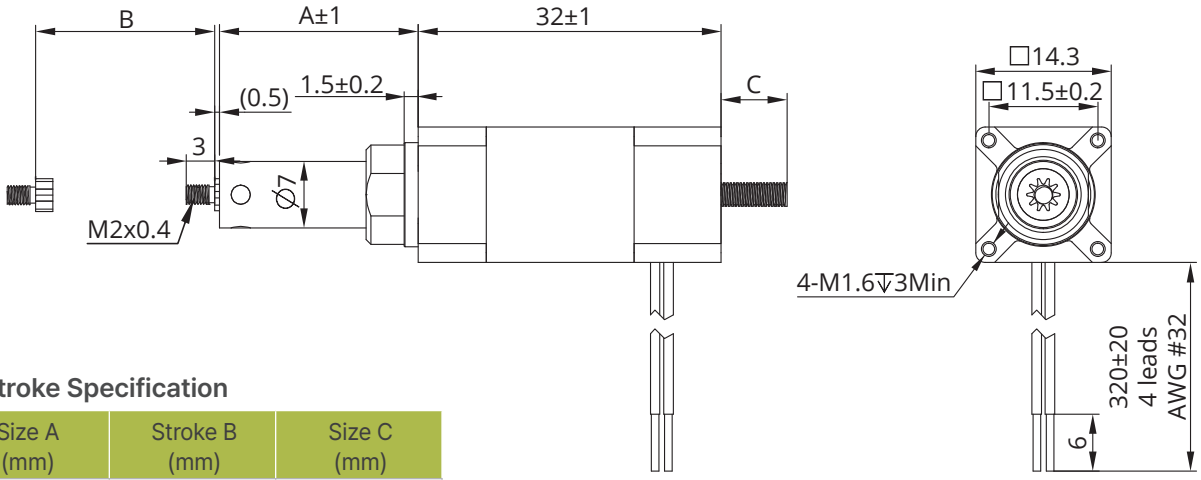

Stroke Specification

Size A (mm)	Stroke B (mm)	Size C (mm)
6	5	0
11	10	0
16	15	2
21	20	7

For customized options, please contact DINGS' or your local distributor

Size 6 (14mm) Series

Speed Thrust Curves

Size 6 Single Stack Speed Thrust Curves

kg ※Bipolar chopper constant current drive operating current 0.25A (RMS)

(Recommended Load Limit 1.5kg)

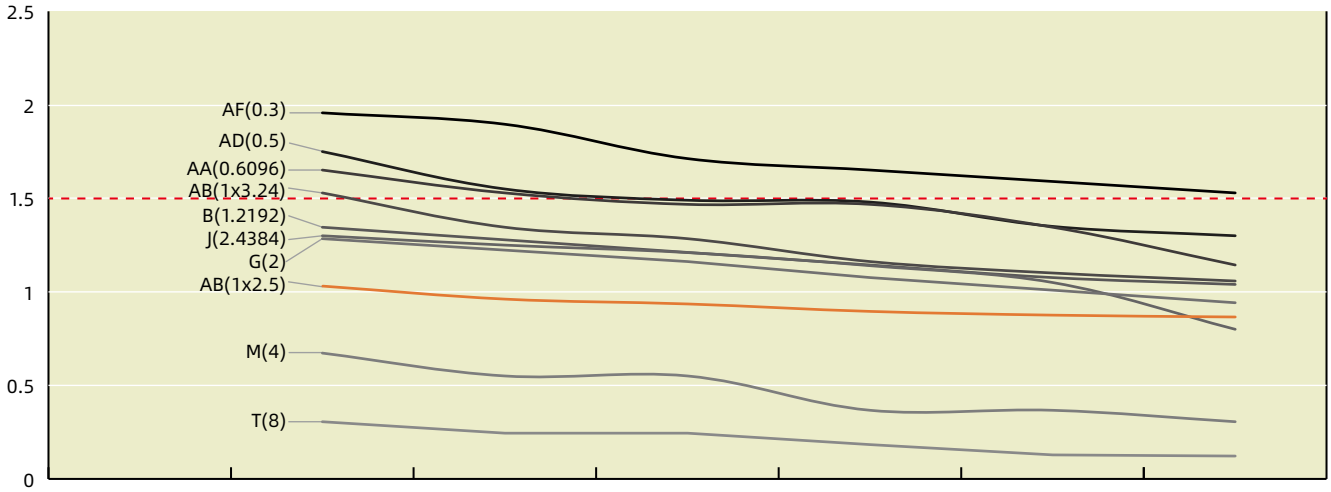

T(mm/s)	8	24	40	60	80	100
M(mm/s)	4	12	20	30	40	50
J(mm/s)	2.4384	7.3152	14.6304	18.288	24.384	30.48
G(mm/s)	2	6	10	15	20	25
B(mm/s)	1.2192	3.6576	6.096	9.144	12.192	15.24
AB(mm/s)	1	3	5	7.5	10	12.5
AA(mm/s)	0.6096	1.8288	3.048	4.572	6.096	7.62
AD(mm/s)	0.5	1.5	3	3.75	5	6.25
AF(mm/s)	0.3	0.9	1.5	2.25	3	3.75
Speed r/min	60	180	360	450	600	750
Pulse pps	200	600	1000	1500	2000	2500

TEST CONDITION

Testing Voltage: 24Vdc, Driver Model: DS-OLS2-FPD bipolar, chopper driver at rated current (rms).
Motor thrust may vary depending on voltage and driver conditions. 50% thrust margin is recommended.

Size 8 (20mm) Series

Size 8 [20mm] Stepper Lead Screw Linear Actuator unit can be integrated into various applications to provide precise linear positioning while occupying less than 1 in² of mounting footprint and providing up to 45N of continuous thrust.

Motor Characteristics

Motor	Voltage (V)	Current (A [RMS])	Resistance (Ω)	Inductance (mH)	Weight (g)	Lead Wire No.	Motor Length (mm)
8-2105	2.5	0.5	5.1	1.5	51	4	27.2
8-2205	4.4	0.5	8.8	2.7	74	4	38.1

Note : Motor Insulation Class B, Motor Temperature Rise 80°C, Ambient Temperature -20°C~55°C

Available Lead Screw and Travel per Step

Screw Dia. (inch)	Screw Dia. (mm)	Lead (inch)	Lead (mm)	Lead Code	Travel Per Step @1.8° (mm)*
0.138	3.5	0.024	0.6096	AA	0.003
0.138	3.5	0.048	1.2192	B	0.0061
0.138	3.5	0.096	2.4384	J	0.0122
0.138	3.5	0.0118	0.3	AF	0.0015
0.128	3.24	0.0394	1	AB	0.005
0.138	3.5	0.0787	2	G	0.01
0.138	3.5	0.1575	4	M	0.02
0.138	3.5	0.315	8	T	0.04
0.118	3.0	0.0197	0.5	AD	0.0025

* Motor wiring and screw lead could be customized according to customer's request

* Value Truncated

Size 8 (20mm) Series

Dimensional Drawings : External Actuator

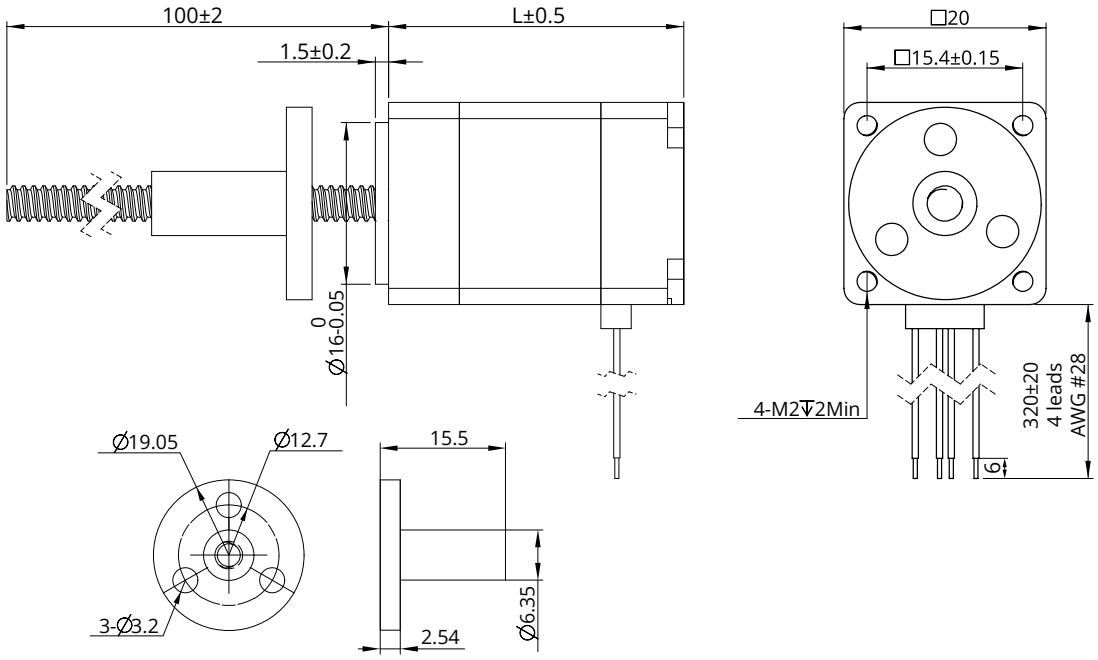

Dimensional Drawings : Non-Captive Actuator

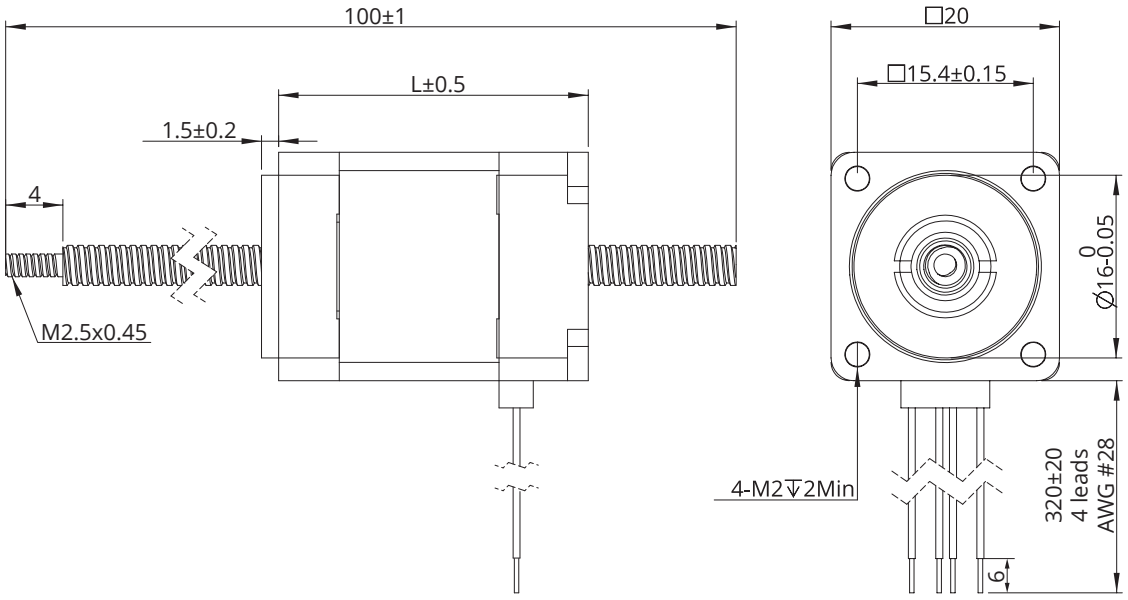

Note : All drawings are 1st-angle projection - ISO Compliant (3D models available)

Size 8 (20mm) Series

Dimensional Drawings : Electric Cylinder (Captive) Actuator

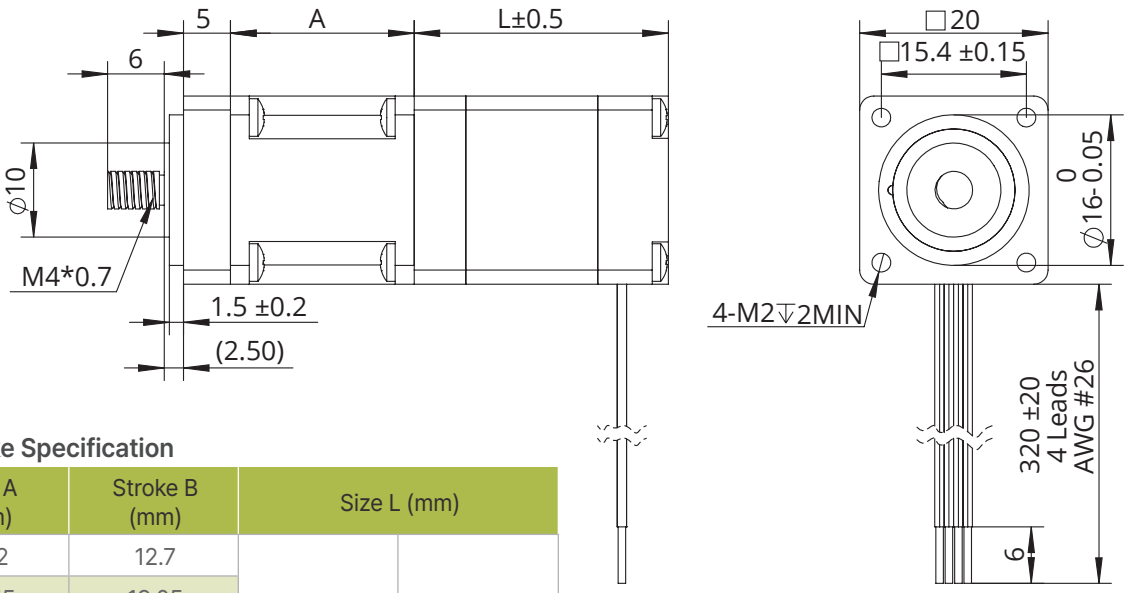

Stroke Specification

Size A (mm)	Stroke B (mm)	Size L (mm)	
22.2	12.7	Single stack motor 27.2mm	Double stack motor 38.1mm
28.55	19.05		
34.9	25.4		
41.3	31.8		
47.6	38.1		
60.3	50.8		
73	63.5		

Dimensional Drawings : Kaptive Actuator

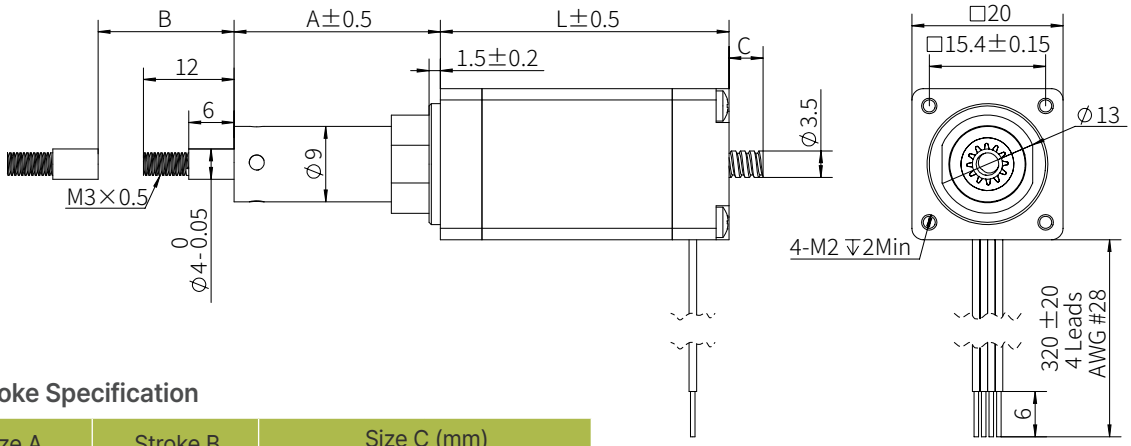

Stroke Specification

Size A (mm)	Stroke B (mm)	Size C (mm)	
		L=27.2	L=38.1
10.9	9	0	0
14.6	12.7	3.5	0
20.8	19.05	9.5	0
27.3	25.4	15.5	4.5
33.7	31.8	22.5	11.5
40	38.1	28.5	17.5

For customized options, please contact DINGS' or your local distributor

Size 8 (20mm) Series

Speed Thrust Curves

Size 8 Single Stack Speed Thrust Curves

kg ※Bipolar chopper constant current drive operating current 0.5A (RMS) (Recommended Load Limit 4.5kg)

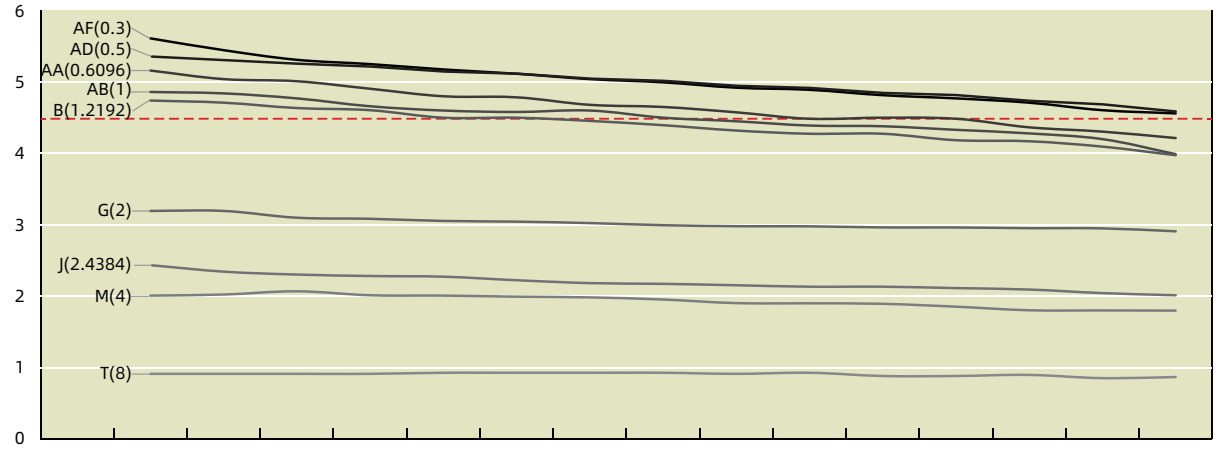

T(mm/s)	4	8	12	16	24	32	40	48	64	80	96	120	144	160	200
AD(mm/s)	0.25	0.5	0.75	1	1.5	2	2.5	3	4	5	6	7.5	9	10	12.5
M(mm/s)	2	4	6	8	12	16	20	24	32	40	48	60	72	80	100
G(mm/s)	1	2	3	4	6	8	10	12	16	20	24	30	36	40	50
J(mm/s)	1.22	2.44	3.66	4.88	7.32	9.75	12.19	14.63	19.51	24.38	29.26	36.58	43.89	48.77	60.96
B(mm/s)	0.6	1.2	1.8	2.4	3.7	4.9	6.1	7.3	9.8	12.2	14.6	18.3	22	24.4	30.5
AB(mm/s)	0.5	1	1.5	2	3	4	5	6	8	10	12	15	18	20	25
AA(mm/s)	0.3	0.6	0.9	1.2	1.8	2.4	3.1	3.7	4.9	6.1	7.3	9.1	11	12.2	15.2
AF(mm/s)	0.15	0.3	0.45	0.6	0.9	1.2	1.5	1.8	2.4	3	3.6	4.5	5.4	6	7.5
speed r/min	30	60	90	120	180	240	300	360	480	600	720	900	1080	1200	1500
pulse pps	100	200	300	400	600	800	1000	1200	1600	2000	2400	3000	3600	4000	5000

Size 8 Double Stack Speed Thrust Curves

kg ※Bipolar chopper constant current drive operating current 0.5A (RMS) (Recommended Load Limit 4.5kg)

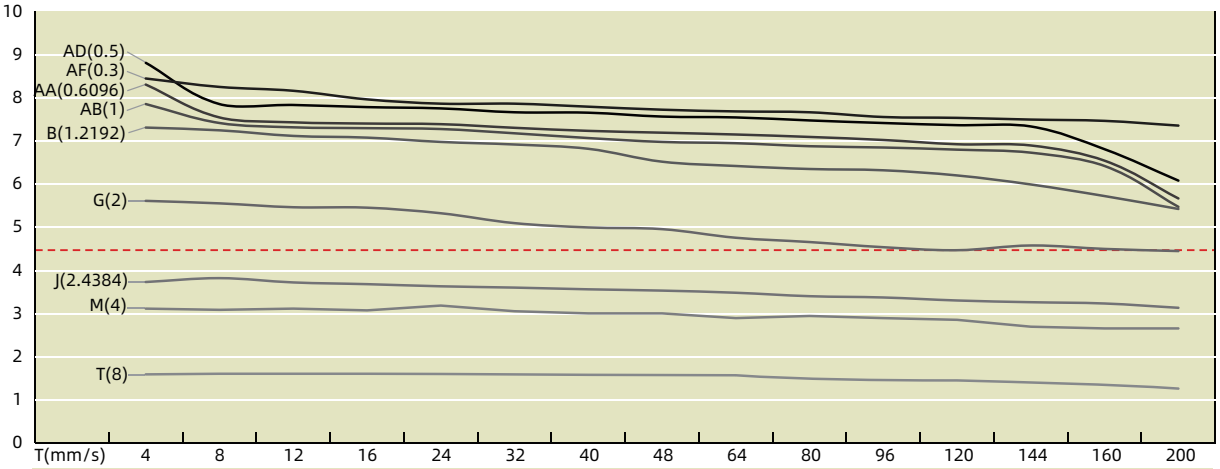

T(mm/s)	4	8	12	16	24	32	40	48	64	80	96	120	144	160	200
AD(mm/s)	0.25	0.5	0.75	1	1.5	2	2.5	3	4	5	6	7.5	9	10	12.5
M(mm/s)	2	4	6	8	12	16	20	24	32	40	48	60	72	80	100
G(mm/s)	1	2	3	4	6	8	10	12	16	20	24	30	36	40	50
J(mm/s)	1.22	2.44	3.66	4.88	7.32	9.75	12.19	14.63	19.51	24.38	29.26	36.58	43.89	48.77	60.96
B(mm/s)	0.6	1.2	1.8	2.4	3.7	4.9	6.1	7.3	9.8	12.2	14.6	18.3	22	24.4	30.5
AB(mm/s)	0.5	1	1.5	2	3	4	5	6	8	10	12	15	18	20	25
AA(mm/s)	0.3	0.6	0.9	1.2	1.8	2.4	3.1	3.7	4.9	6.1	7.3	9.1	11	12.2	15.2
AF(mm/s)	0.15	0.3	0.45	0.6	0.9	1.2	1.5	1.8	2.4	3	3.6	4.5	5.4	6	7.5
Speed r/min	30	60	90	120	180	240	300	360	480	600	720	900	1080	1200	1500
Pulse pps	100	200	300	400	600	800	1000	1200	1600	2000	2400	3000	3600	4000	5000

TEST CONDITION

Testing Voltage: 24Vdc, Driver Model: DS-OLS2-FPD bipolar, chopper driver at rated current (rms).
Motor thrust may vary depending on voltage and driver conditions. 50% thrust margin is recommended.

Size 11 (28mm) Series

Size 11 [28mm] Stepper Lead Screw Linear Actuator occupies a mounting footprint of slightly above 1 in^2 and provides over 140N of continuous thrust, over 3x as that of the size 8.

Motor Characteristics

Motor	Voltage (V)	Current (A [RMS])	Resistance (Ω)	Inductance (mH)	Weight (g)	Lead Wire No.	Motor Length (mm)
11-2105	4.55	0.5	9.1	6	117	4	33.35
11-2110	2.1	1	2.1	1.5	117	4	33.35
11-2209	3.9	0.95	4.1	4	173	4	45
11-2216	2.4	1.6	1.5	1.3	173	4	45

Note : Motor Insulation Class B, Motor Temperature Rise 80°C, Ambient Temperature -20°C~55°C

Available Lead Screw and Travel per Step

Screw Dia. (inch)	Screw Dia. (mm)	Lead (inch)	Lead (mm)	Lead Code	Travel Per Step @1.8° (mm)*
0.188	4.77	0.0125	0.3175	AL	0.0016
0.188	4.77	0.025	0.635	A	0.0032
0.188	4.77	0.05	1.27	D	0.0064
0.188	4.77	0.0625	1.5875	F	0.0079
0.218	5.56	0.096	2.4384	J*	0.0122
0.188	4.77	0.1	2.54	K	0.0127
0.188 / 0.218	4.77 / 5.56	0.192	4.8768	Q*	0.0244
0.188	4.77	0.2	5.08	R	0.0254
0.188	4.77	0.4	10.16	X	0.0508
0.188	4.77	0.1874	4.76	AC	0.0238

* Motor wiring and screw lead could be customized according to customer's request

* Value Truncated

* 5.56mm diameter screw only can be applied in External Type

Size 11 (28mm) Series

Dimensional Drawings : External Actuator

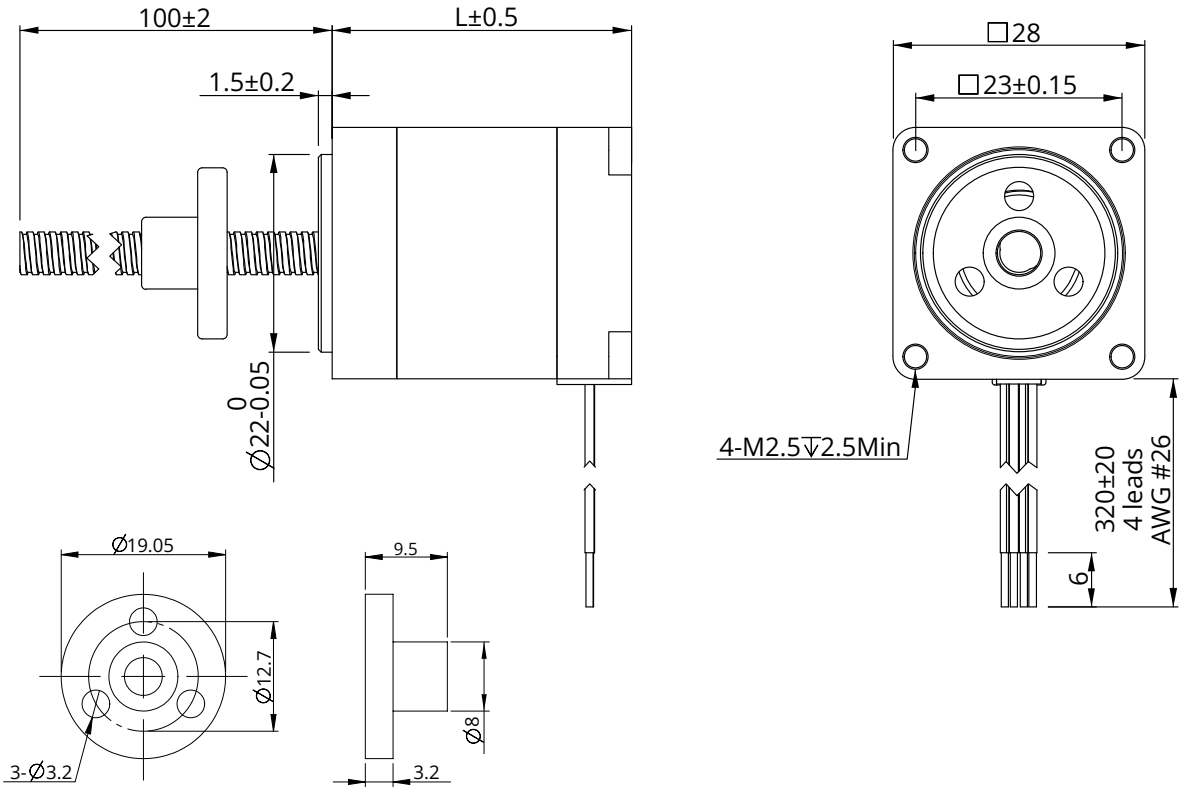

Dimensional Drawings : Non-Captive Actuator

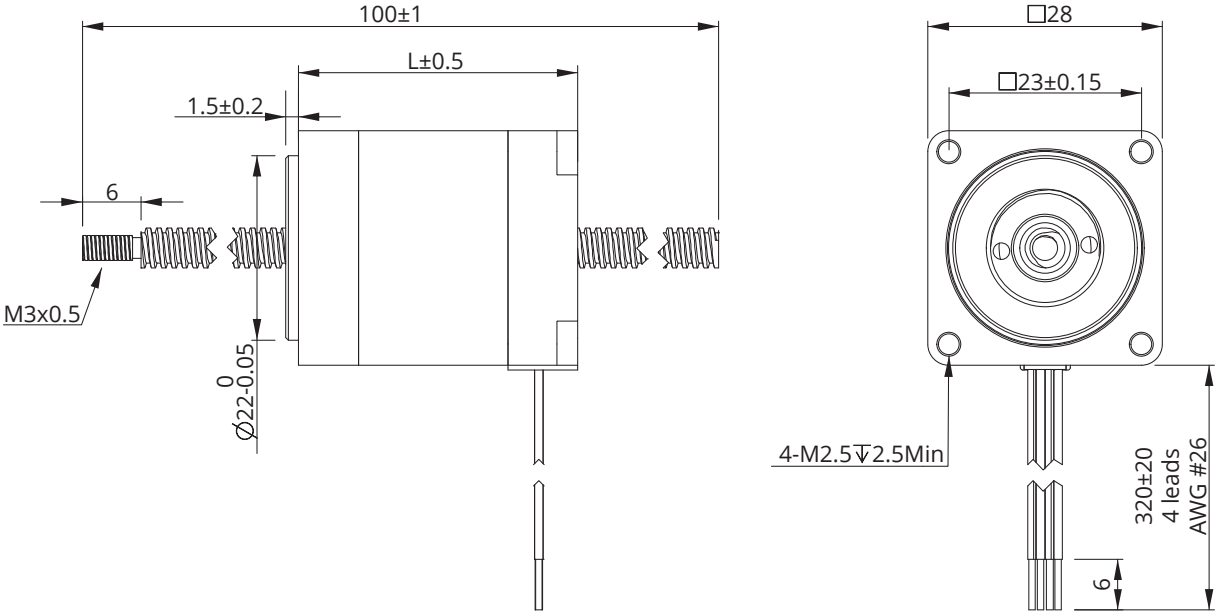

Note : All drawings are 1st-angle projection - ISO Compliant (3D models available)

Size 11 (28mm) Series

Dimensional Drawings : Electric Cylinder (Captive) Actuator

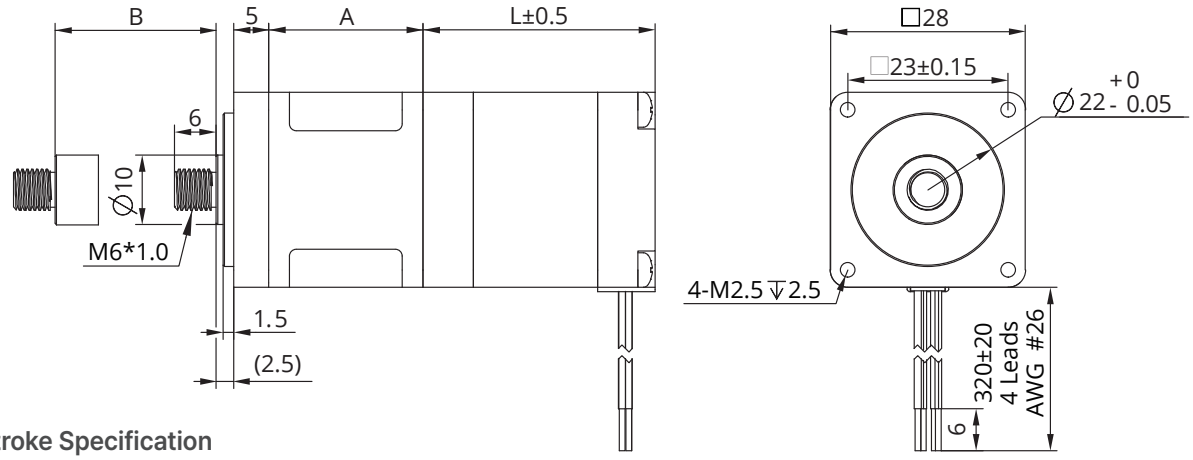

Stroke Specification

Size A (mm)	Stroke B (mm)	Size L (mm)	
22.2	12.7	Single stack motor 33.35mm	Double stack motor 45mm
28.55	19.05		
34.9	25.4		
41.3	31.8		
47.6	38.1		
60.3	50.8		
73	63.5		

Dimensional Drawings : Kaptive Actuator

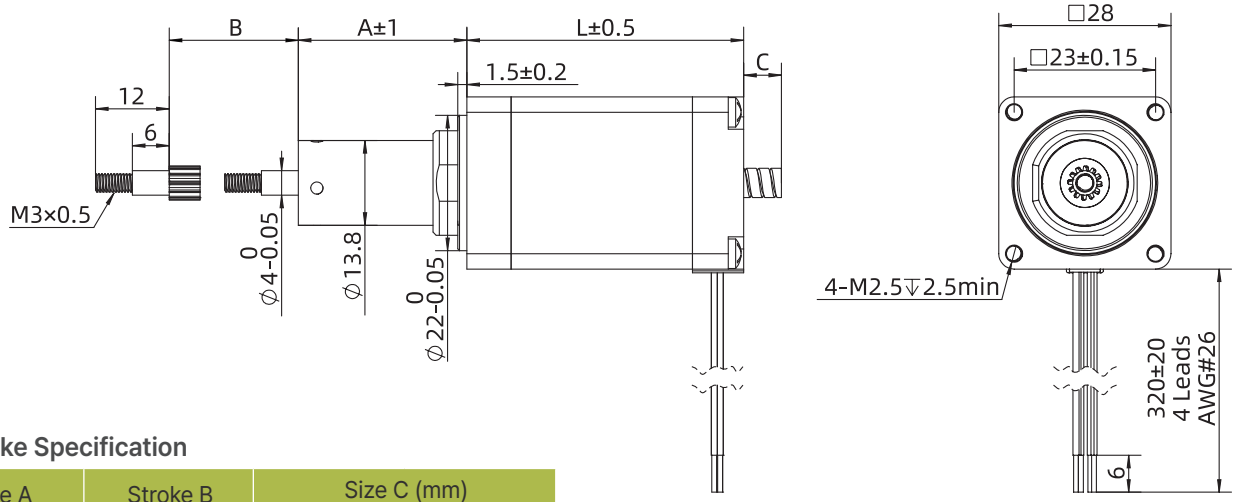

Stroke Specification

Size A (mm)	Stroke B (mm)	Size C (mm)	
		L=33.35	L=45
14.7	12.7	1	0
22.1	19.05	7.8	0
27.4	25.4	13.7	4.6
33.8	31.8	20.1	11
40.1	38.1	26.4	17.4
52.8	50.8	39	29.8
65.5	63.5	52.7	42.5

For customized options, please contact DINGS' or your local distributor

Size 11 (28mm) Series

Speed Thrust Curves

Size 11 Single Stack Speed Thrust Curves

kg ※Bipolar chopper constant current drive operating current 1A (RMS) (Recommended Load Limit 14kg)

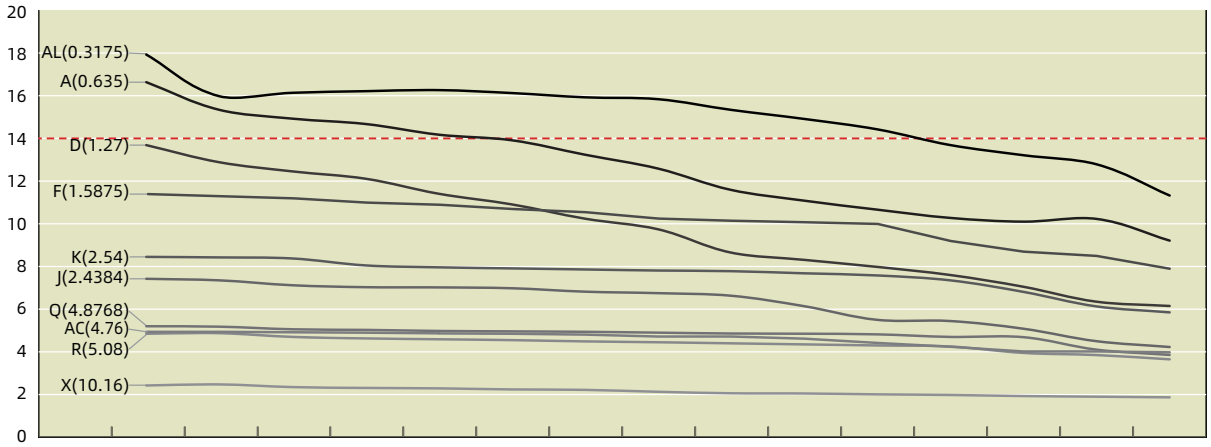

X(mm/s)	5.08	10.16	15.24	20.32	30.48	40.64	50.8	60.96	81.28	101.6	121.92	152.4	182.88	203.2	254
R(mm/s)	2.54	5.08	7.62	10.16	15.24	20.32	25.4	30.48	40.64	50.8	60.96	76.2	91.44	101.6	127
Q(mm/s)	2.44	4.88	7.32	9.75	14.63	19.51	24.38	29.26	39.01	48.77	58.52	73.15	87.78	97.54	121.92
AC(mm/s)	2.38	4.76	7.14	9.52	14.28	19.04	23.8	28.56	38.08	47.6	57.12	71.4	85.68	95.2	119
K(mm/s)	1.27	2.54	3.81	5.08	7.62	10.16	12.7	15.24	20.32	25.4	30.48	38.1	45.72	50.8	63.5
J(mm/s)	1.22	2.44	3.66	4.88	7.32	9.75	12.19	14.63	19.51	24.38	29.26	36.58	43.89	48.77	60.96
F(mm/s)	0.79	1.59	2.38	3.18	4.76	6.35	7.94	9.53	12.70	15.88	19.05	23.81	28.58	31.75	39.69
D(mm/s)	0.64	1.27	1.91	2.54	3.81	5.08	6.35	7.62	10.16	12.7	15.24	19.05	22.86	25.4	31.75
A(mm/s)	0.32	0.64	0.95	1.27	1.91	2.54	3.18	3.81	5.08	6.35	7.62	9.53	11.43	12.7	15.88
AL(mm/s)	0.15	0.3	0.45	0.6	0.9	1.2	1.5	1.8	2.4	3	3.6	4.5	5.4	6	7.5
Speed r/min	30	60	90	120	180	240	300	360	480	600	720	900	1080	1200	1500
Pulse pps	100	200	300	400	600	800	1000	1200	1600	2000	2400	3000	3600	4000	5000

Size 11 Double Stack Speed Thrust Curves

kg ※Bipolar chopper constant current drive operating current 1.6A (RMS) (Recommended Load Limit 14kg)

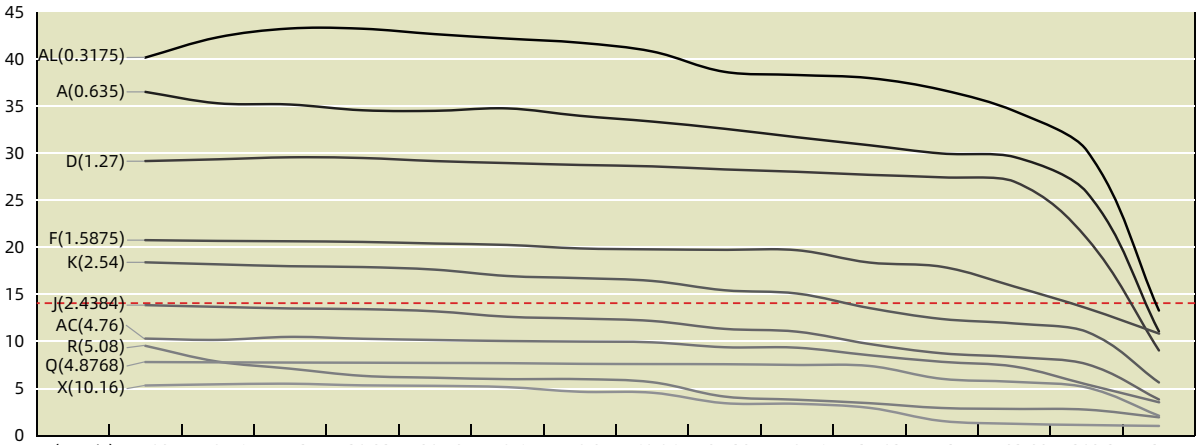

X(mm/s)	5.08	10.16	15.24	20.32	30.48	40.64	50.8	60.96	81.28	101.6	121.92	152.4	182.88	203.2	254
R(mm/s)	2.54	5.08	7.62	10.16	15.24	20.32	25.4	30.48	40.64	50.8	60.96	76.2	91.44	101.6	127
Q(mm/s)	2.44	4.88	7.32	9.75	14.63	19.51	24.38	29.26	39.01	48.77	58.52	73.15	87.78	97.54	121.92
AC(mm/s)	2.38	4.76	7.14	9.52	14.28	19.04	23.8	28.56	38.08	47.6	57.12	71.4	85.68	95.2	119
K(mm/s)	1.27	2.54	3.81	5.08	7.62	10.16	12.7	15.24	20.32	25.4	30.48	38.1	45.72	50.8	63.5
J(mm/s)	1.22	2.44	3.66	4.88	7.32	9.75	12.19	14.63	19.51	24.38	29.26	36.58	43.89	48.77	60.96
F(mm/s)	0.79	1.59	2.38	3.18	4.76	6.35	7.94	9.53	12.70	15.88	19.05	23.81	28.58	31.75	39.69
D(mm/s)	0.64	1.27	1.91	2.54	3.81	5.08	6.35	7.62	10.16	12.7	15.24	19.05	22.86	25.4	31.75
A(mm/s)	0.32	0.64	0.95	1.27	1.91	2.54	3.18	3.81	5.08	6.35	7.62	9.53	11.43	12.7	15.88
AL(mm/s)	0.15	0.3	0.45	0.6	0.9	1.2	1.5	1.8	2.4	3	3.6	4.5	5.4	6	7.5
Speed r/min	30	60	90	120	180	240	300	360	480	600	720	900	1080	1200	1500
Pulse pps	100	200	300	400	600	800	1000	1200	1600	2000	2400	3000	3600	4000	5000

TEST CONDITION

Testing Voltage: 24Vdc, Driver Model: DS-OLS2-FPD bipolar, chopper driver at rated current (rms).
Motor thrust may vary depending on voltage and driver conditions. 50% thrust margin is recommended.

Size 14 (35mm) Series

Size 14 [35mm] Stepper Lead Screw Linear Actuator is widely used for linear movement applications, providing up to 230N of continuous thrust.

Motor Characteristics

Motor	Voltage (V)	Current (A [RMS])	Resistance (Ω)	Inductance (mH)	Weight (g)	Lead Wire No.	Motor Length (mm)
14-2105	6.6	0.5	13.2	14	189	4	33.6
14-2110	3.5	1	3.5	3.6	189	4	33.6
14-2115	2.7	1.5	1.8	1.9	189	4	33.6
14-2205	12	0.5	24	29	210	4	45.6
14-2210	6	1	6	7.2	210	4	45.6
14-2215	4	1.5	2.7	3.2	210	4	45.6

Note : Motor Insulation Class B, Motor Temperature Rise 80°C, Ambient Temperature -20°C~55°C

Available Lead Screw and Travel per Step

Screw Dia. (inch)	Screw Dia. (mm)	Lead (inch)	Lead (mm)	Lead Code	Travel Per Step @1.8° (mm)*	Travel Per Step @0.9° (mm)*
0.25	6.35	0.024	0.6096	AA	0.003	0.0015
0.25	6.35	0.025	0.635	A	0.0032	0.0016
0.25	6.35	0.048	1.2192	B	0.0061	0.003
0.25	6.35	0.05	1.27	D	0.0064	0.0032
0.25	6.35	0.0625	1.5875	F	0.0079	0.004
0.25	6.35	0.096	2.4384	J	0.0122	0.0061
0.25	6.35	0.1	2.54	K	0.0127	0.0064
0.25	6.35	0.125	3.175	L	0.0159	0.0079
0.25	6.35	0.192	4.8768	Q	0.0244	0.0122
0.25	6.35	0.2	5.08	R	0.0254	0.0127
0.25	6.35	0.25	6.35	S	0.0318	0.0159
0.25	6.35	0.3333	8.4667	U	0.0423	0.0212
0.25	6.35	0.384	9.7536	W	0.0488	0.0244
0.25	6.35	0.5	12.7	Y	0.0635	0.0318
0.25	6.35	1	25.4	Z	0.127	0.0635
0.236 / 0.25 / 0.315	6 / 6.35 / 8	0.0394	1	AB	0.005	0.0025
0.25 / 0.315	6.35 / 8	0.0787	2	G	0.01	0.005
0.315	8	0.1575	4	M	0.02	0.01
0.315	8	0.315	8	T	0.04	0.02
0.236 / 0.315	6 / 8	0.1969	5	E	0.025	0.0125
0.315	8	0.3937	10	C	0.05	0.025
0.25	6.35	0.0313	0.794	N	0.004	0.002

* Motor wiring and screw lead could be customized according to customer's request

* Value Truncated

* 9.525mm diameter screw only can be applied in External Type

Size 14 (35mm) Series

Dimensional Drawings : External Actuator

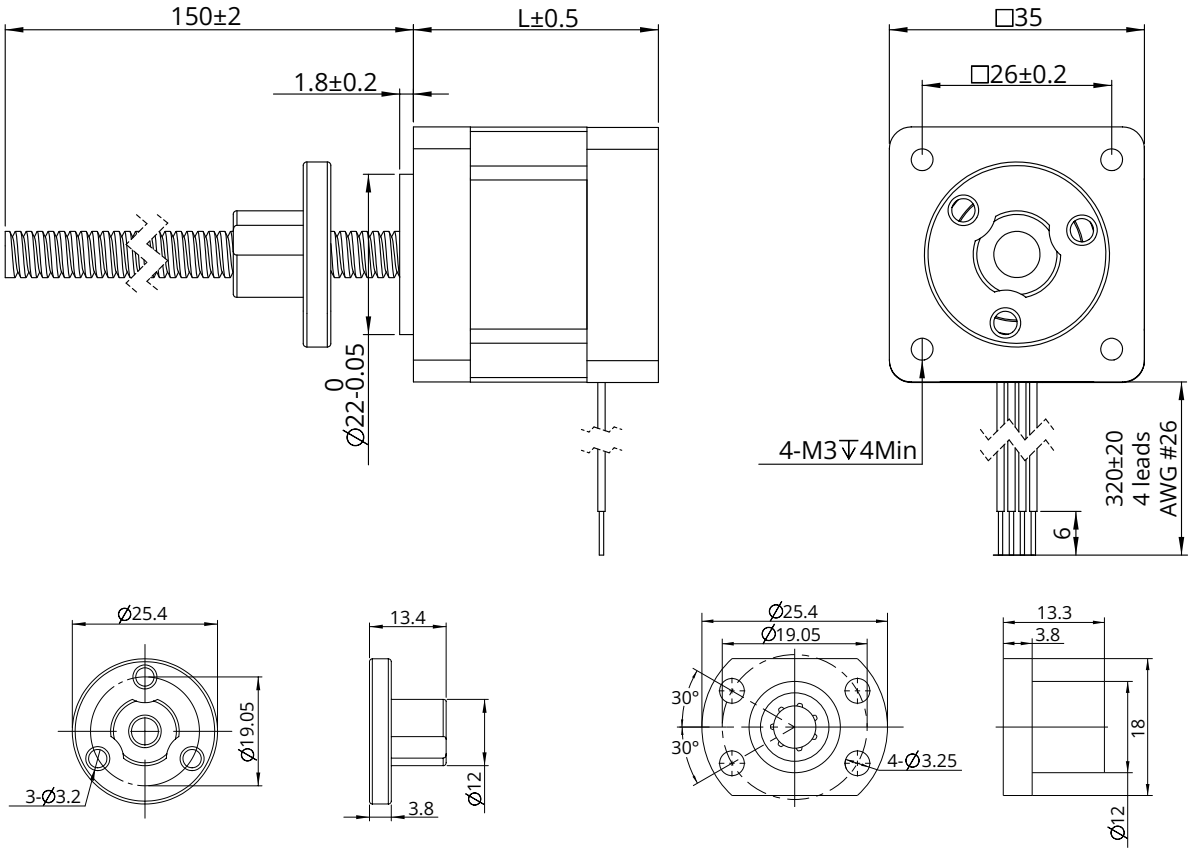

Dimensional Drawings : Non-Captive Actuator

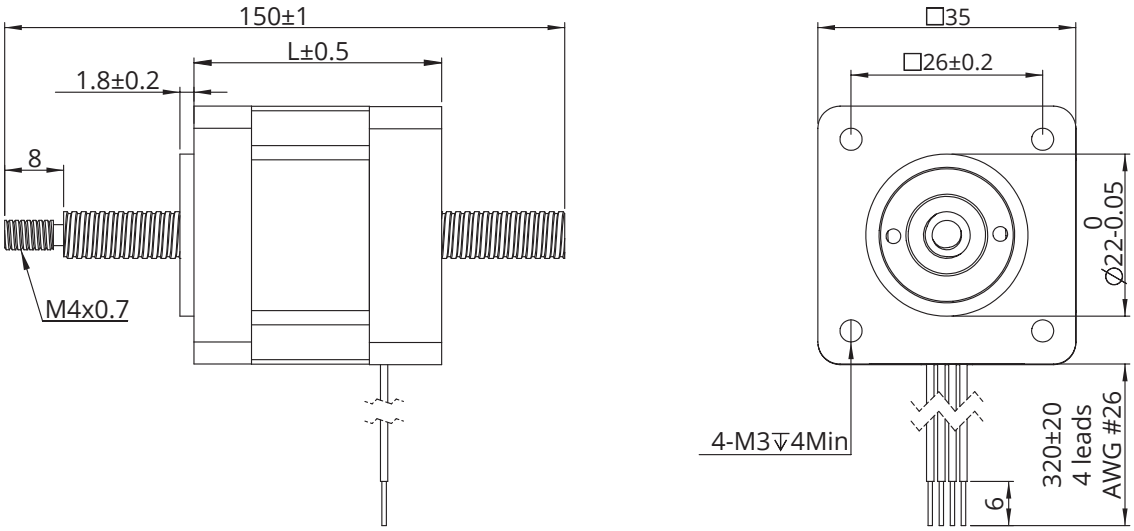

Note : All drawings are 1st-angle projection - ISO Compliant (3D models available)

Size 14 (35mm) Series

Dimensional Drawings : Electric Cylinder (Captive) Actuator

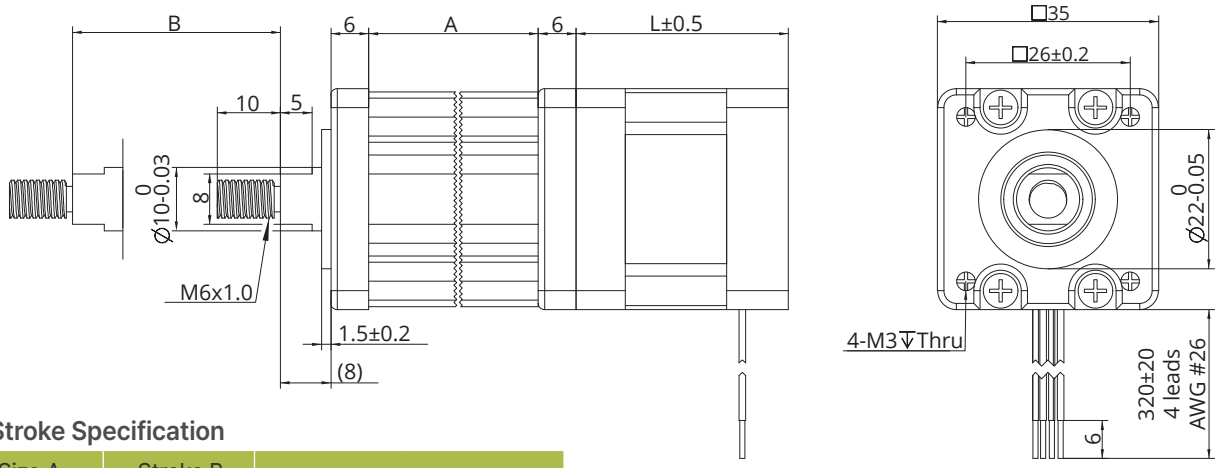

Stroke Specification

Size A (mm)	Stroke B (mm)	Size L (mm)	
35.7	12.7	Single stack motor 33.6mm	Double stack motor 45.6mm
42.05	19.05		
48.4	25.4		
54.8	31.8		
61.1	38.1		
73.8	50.8		
86.5	63.5		

Dimensional Drawings : Kaptive Actuator

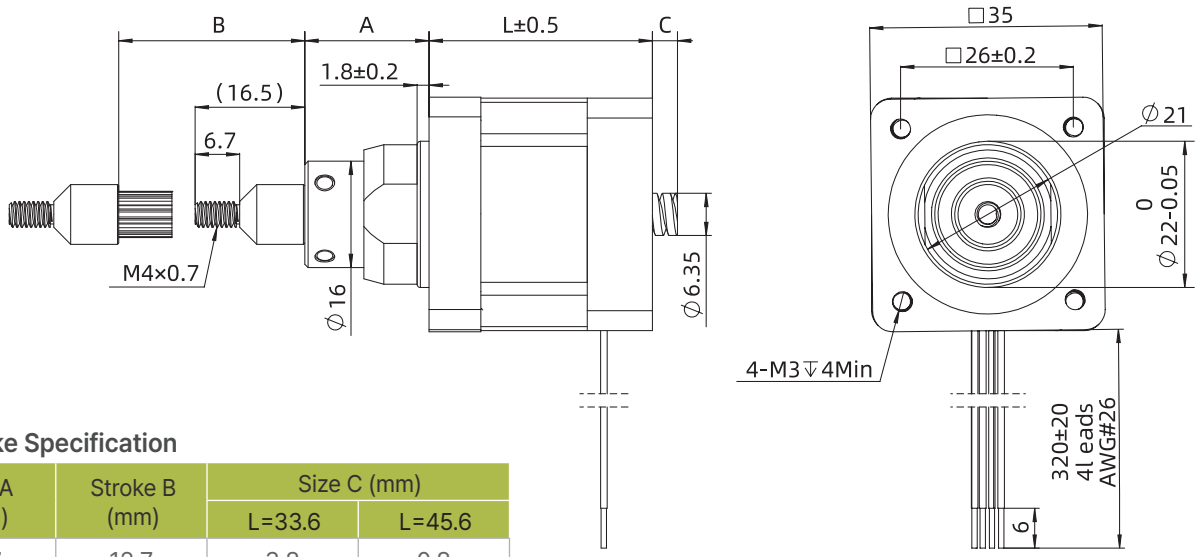

Stroke Specification

Size A (mm)	Stroke B (mm)	Size C (mm)	
		L=33.6	L=45.6
18.7	12.7	3.8	0.8
25.05	19.05	10.15	7.15
31.4	25.4	16.5	13.5
37.75	31.75	22.85	19.85
44.1	38.1	29.2	26.2
56.8	50.8	41.9	38.9
69.5	63.5	54.6	51.6

For customized options, please contact DINGS' or your local distributor

Size 14 (35mm) Series

Speed Thrust Curves

Size 14 Single Stack Speed Thrust Curves

※Bipolar chopper constant current drive, operating current 1.5A (RMS), screw diameter 6.35mm (Recommended Load Limit 23.5kg)

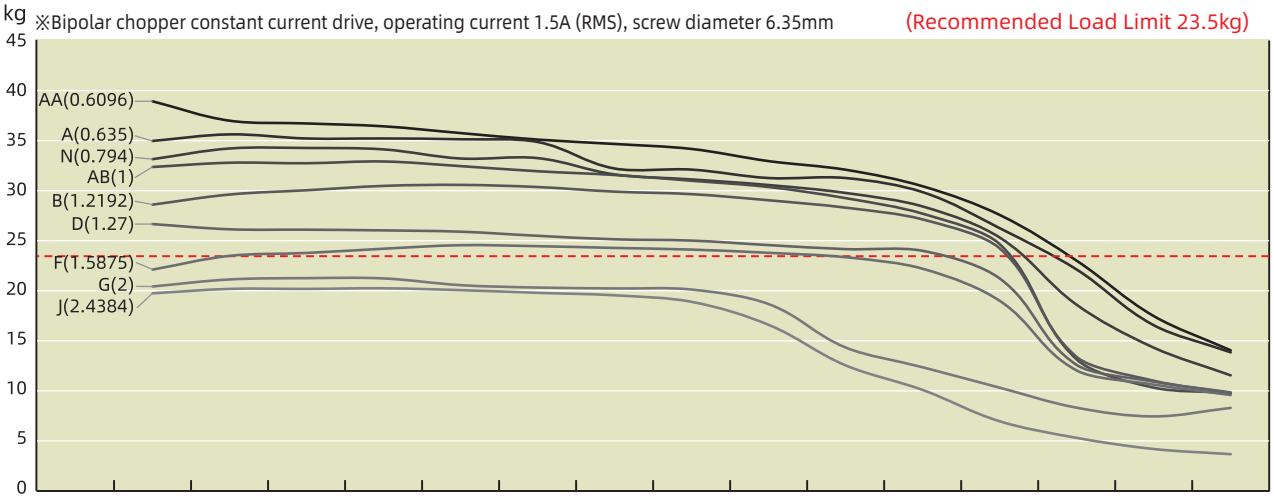

J (mm/s)	1.22	2.44	3.66	4.88	7.32	9.75	12.19	14.63	19.51	24.38	29.26	36.58	43.89	48.77	60.96
G (mm/s)	1	2	3	4	6	8	10	12	16	20	24	30	36	40	50
F (mm/s)	0.79	1.59	2.38	3.18	4.76	6.35	7.94	9.53	12.7	15.88	19.05	23.81	28.58	31.75	39.69
D (mm/s)	0.64	1.27	1.91	2.54	3.81	5.08	6.35	7.62	10.16	12.7	15.24	19.05	22.86	25.4	31.75
B (mm/s)	0.61	1.22	1.83	2.44	3.66	4.88	6.1	7.32	9.75	12.19	14.63	18.29	21.95	24.38	30.48
AB (mm/s)	0.5	1	1.5	2	3	4	5	6	8	10	12	15	18	20	25
N (mm/s)	0.4	0.79	1.19	1.59	2.38	3.18	3.97	4.76	6.35	7.94	9.53	11.91	14.29	15.88	19.85
A (mm/s)	0.32	0.64	0.95	1.27	1.91	2.54	3.18	3.81	5.08	6.35	7.62	9.53	11.43	12.7	15.88
AA (mm/s)	0.3	0.61	0.91	1.22	1.83	2.44	3.05	3.66	4.88	6.1	7.32	9.14	10.97	12.19	15.24
Speed r/min	30	60	90	120	180	240	300	360	480	600	720	900	1080	1200	1500
Pulse pps	100	200	300	400	600	800	1000	1200	1600	2000	2400	3000	3600	4000	5000

Size 14 Single Stack Speed Thrust Curves

※Bipolar chopper constant current drive, operating current 1.5A (RMS), screw diameter 6.35mm (Recommended Load Limit 23.5kg)

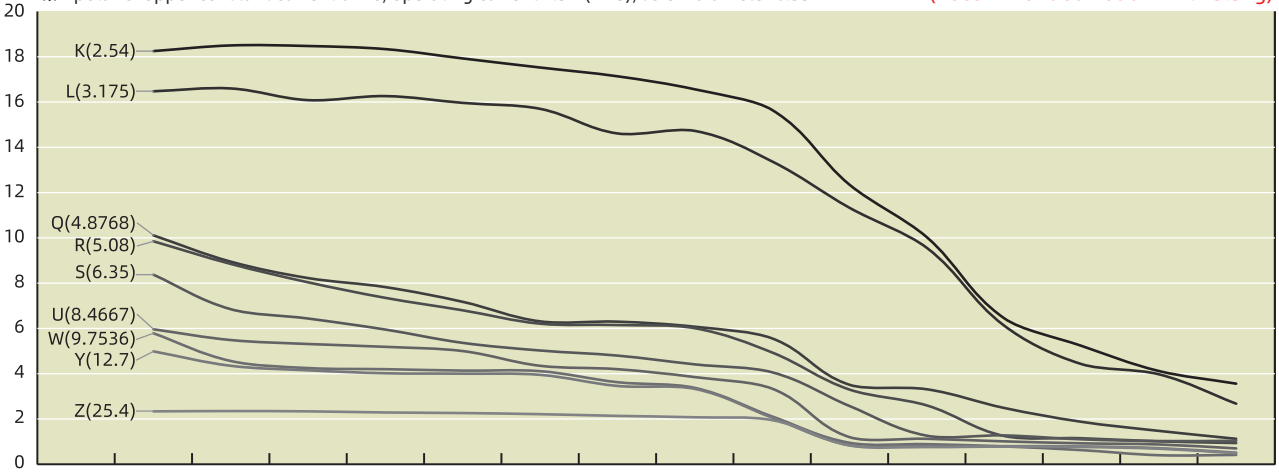

Z (mm/s)	12.7	25.4	38.1	50.8	76.2	101.6	127	152.4	203.2	254	304.8	381	457.2	508	635
Y (mm/s)	6.35	12.7	19.05	25.4	38.1	50.8	63.5	76.2	101.6	127	152.4	190.5	228.6	254	317.5
W (mm/s)	4.88	9.75	14.63	19.51	29.26	39.01	48.77	58.52	78.03	97.54	117.04	146.3	175.56	195.07	243.84
U (mm/s)	4.23	8.47	12.7	16.93	25.4	33.87	42.33	50.8	67.73	84.67	101.6	127	152.4	169.33	211.67
S (mm/s)	3.18	6.35	9.53	12.7	19.05	25.4	31.75	38.1	50.8	63.5	76.2	95.25	114.3	127	158.75
R (mm/s)	2.54	5.08	7.62	10.16	15.24	20.32	25.4	30.48	40.64	50.8	60.96	76.2	91.44	101.6	127
Q (mm/s)	2.44	4.88	7.32	9.75	14.63	19.51	24.38	29.26	39.01	48.77	58.52	73.15	87.78	97.54	121.92
L (mm/s)	1.59	3.18	4.76	6.35	9.53	12.7	15.88	19.05	25.4	31.75	38.1	47.63	57.15	63.5	79.38
K (mm/s)	1.27	2.54	3.81	5.08	7.62	10.16	12.7	15.24	20.32	25.4	30.48	38.1	45.72	50.8	63.5
Speed r/min	30	60	90	120	180	240	300	360	480	600	720	900	1080	1200	1500
Pulse pps	100	200	300	400	600	800	1000	1200	1600	2000	2400	3000	3600	4000	5000

TEST CONDITION

Testing Voltage: 24Vdc, Driver Model: DS-OLS2-FPD bipolar, chopper driver at rated current (rms).
Motor thrust may vary depending on voltage and driver conditions. 50% thrust margin is recommended.

Size 14 (35mm) Series

Size 14 Single Stack Speed Thrust Curves

※Bipolar chopper constant current drive, operating current 1.5A (RMS), screw diameter 6&8mm (Recommended Load Limit 23.5kg)

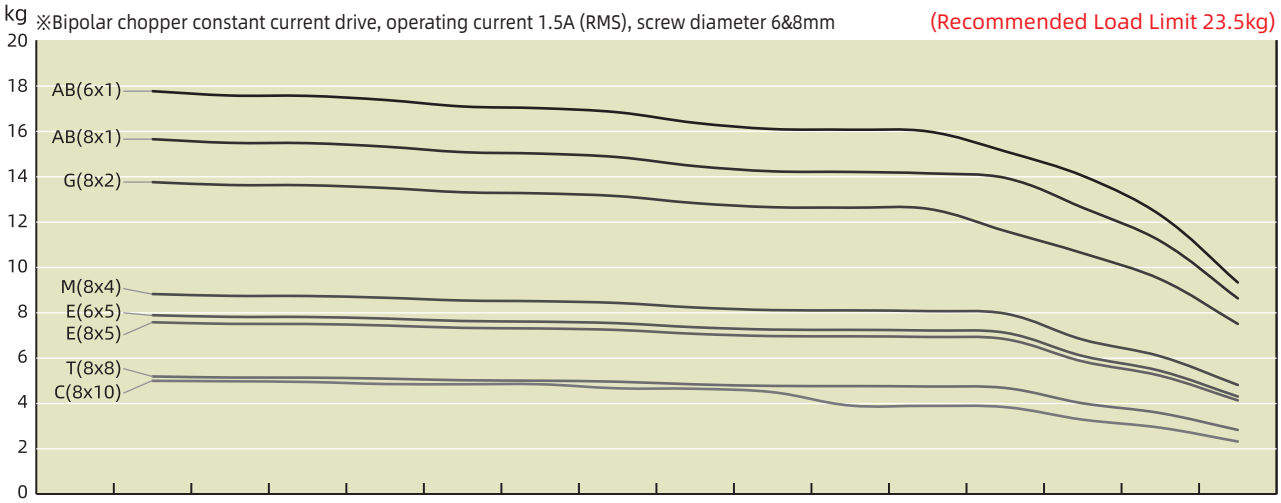

C (mm/s)	5	10	15	20	30	40	50	60	80	100	120	150	180	200	250
T (mm/s)	4	8	12	16	24	32	40	48	64	80	96	120	144	160	200
E (mm/s)	2.5	5	7.5	10	15	20	25	30	40	50	60	75	90	100	125
M (mm/s)	2	4	6	8	12	16	20	24	32	40	48	60	72	80	100
G (mm/s)	1	2	3	4	6	8	10	12	16	20	24	30	36	40	50
AB (mm/s)	0.5	1	1.5	2	3	4	5	6	8	10	12	15	18	20	25
Speed r/min	30	60	90	120	180	240	300	360	480	600	720	900	1080	1200	1500
Pulse pps	100	200	300	400	600	800	1000	1200	1600	2000	2400	3000	3600	4000	5000

Size 14 Double Stack Speed Thrust Curves

※Bipolar chopper constant current drive, operating current 1.5A (RMS), screw diameter 6.35mm (Recommended Load Limit 23.5kg)

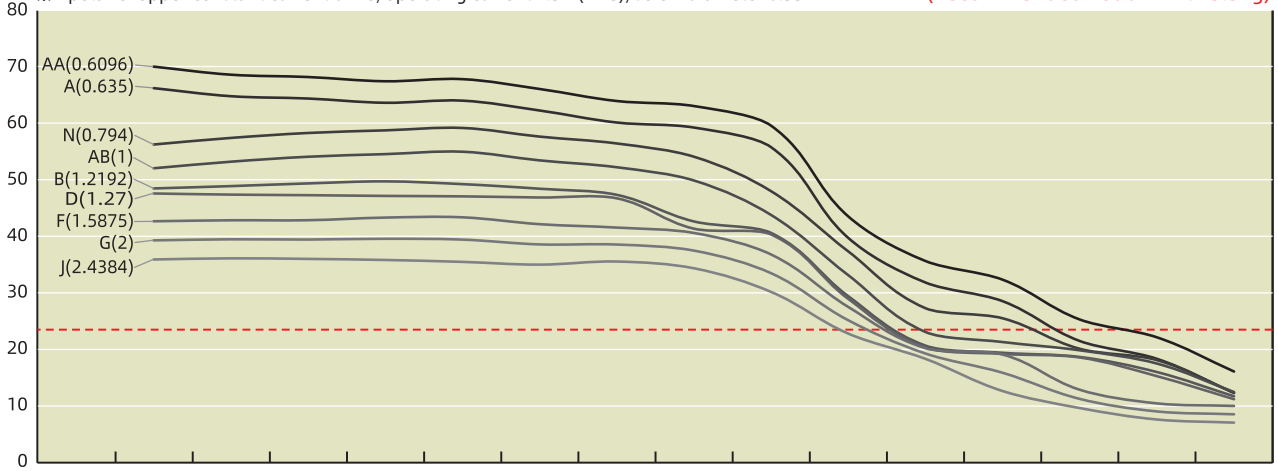

J (mm/s)	1.22	2.44	3.66	4.88	7.32	9.75	12.19	14.63	19.51	24.38	29.26	36.58	43.89	48.77	60.96
G (mm/s)	1	2	3	4	6	8	10	12	16	20	24	30	36	40	50
F (mm/s)	0.79	1.59	2.38	3.18	4.76	6.35	7.94	9.53	12.7	15.88	19.05	23.81	28.58	31.75	39.69
D (mm/s)	0.64	1.27	1.91	2.54	3.81	5.08	6.35	7.62	10.16	12.7	15.24	19.05	22.86	25.4	31.75
B (mm/s)	0.61	1.22	1.83	2.44	3.66	4.88	6.1	7.32	9.75	12.19	14.63	18.29	21.95	24.38	30.48
AB (mm/s)	0.5	1	1.5	2	3	4	5	6	8	10	12	15	18	20	25
N (mm/s)	0.4	0.79	1.19	1.59	2.38	3.18	3.97	4.76	6.35	7.94	9.53	11.91	14.29	15.88	19.85
A (mm/s)	0.32	0.64	0.95	1.27	1.91	2.54	3.18	3.81	5.08	6.35	7.62	9.53	11.43	12.7	15.88
AA (mm/s)	0.3	0.61	0.91	1.22	1.83	2.44	3.05	3.66	4.88	6.1	7.32	9.14	10.97	12.19	15.24
Speed r/min	30	60	90	120	180	240	300	360	480	600	720	900	1080	1200	1500
Pulse pps	100	200	300	400	600	800	1000	1200	1600	2000	2400	3000	3600	4000	5000

TEST CONDITION

Testing Voltage: 24Vdc, Driver Model: DS-OLS2-FPD bipolar, chopper driver at rated current (rms).
Motor thrust may vary depending on voltage and driver conditions. 50% thrust margin is recommended.

Size 14 (35mm) Series

Size 14 Double Stack Speed Thrust Curves

※Bipolar chopper constant current drive, operating current 1.5A (RMS), screw diameter 6.35mm (Recommended Load Limit 23.5kg)

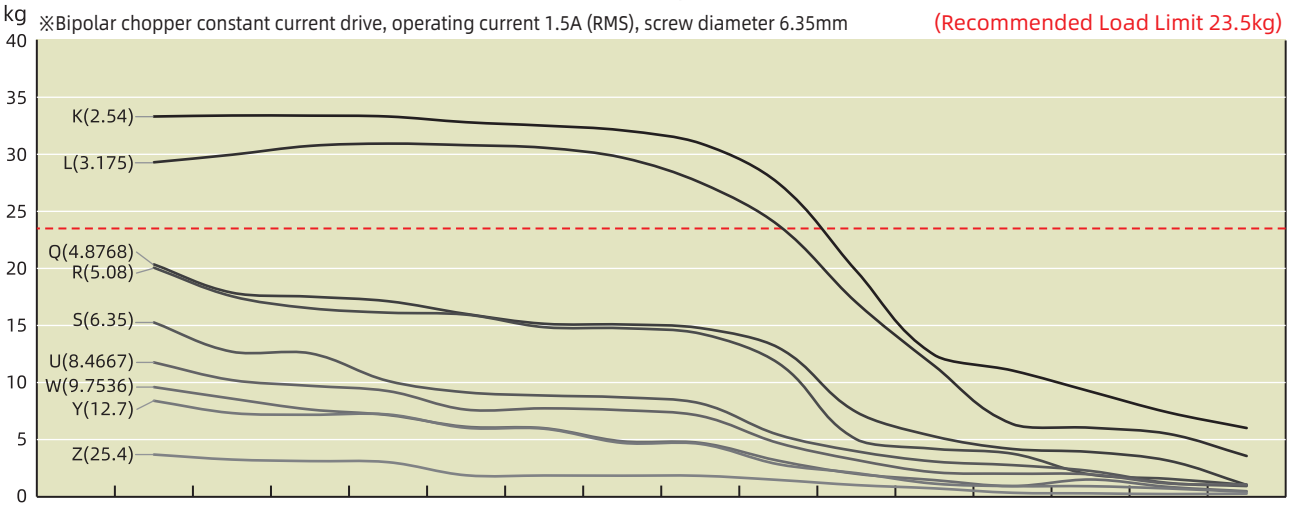

Z (mm/s)	12.7	25.4	38.1	50.8	76.2	101.6	127	152.4	203.2	254	304.8	381	457.2	508	635
Y (mm/s)	6.35	12.7	19.05	25.4	38.1	50.8	63.5	76.2	101.6	127	152.4	190.5	228.6	254	317.5
W (mm/s)	4.88	9.75	14.63	19.51	29.26	39.01	48.77	58.52	78.03	97.54	117.04	146.3	175.56	195.07	243.84
U (mm/s)	4.23	8.47	12.7	16.93	25.4	33.87	42.33	50.8	67.73	84.67	101.6	127	152.4	169.33	211.67
S (mm/s)	3.175	6.35	9.525	12.7	19.05	25.4	31.75	38.1	50.8	63.5	76.2	95.25	114.3	127	158.75
R (mm/s)	2.54	5.08	7.62	10.16	15.24	20.32	25.4	30.48	40.64	50.8	60.96	76.2	91.44	101.6	127
Q (mm/s)	2.44	4.88	7.32	9.75	14.63	19.51	24.38	29.26	39.01	48.77	58.52	73.15	87.78	97.54	121.92
L (mm/s)	1.59	3.18	4.76	6.35	9.53	12.7	15.88	19.05	25.4	31.75	38.1	47.63	57.15	63.5	79.38
K (mm/s)	1.27	2.54	3.81	5.08	7.62	10.16	12.7	15.24	20.32	25.4	30.48	38.1	45.72	50.8	63.5
Speed r/min	30	60	90	120	180	240	300	360	480	600	720	900	1080	1200	1500
Pulse pps	100	200	300	400	600	800	1000	1200	1600	2000	2400	3000	3600	4000	5000

Size 14 Double Stack Speed Thrust Curves

※Bipolar chopper constant current drive, operating current 1.5A (RMS), screw diameter 6&8mm (Recommended Load Limit 23.5kg)

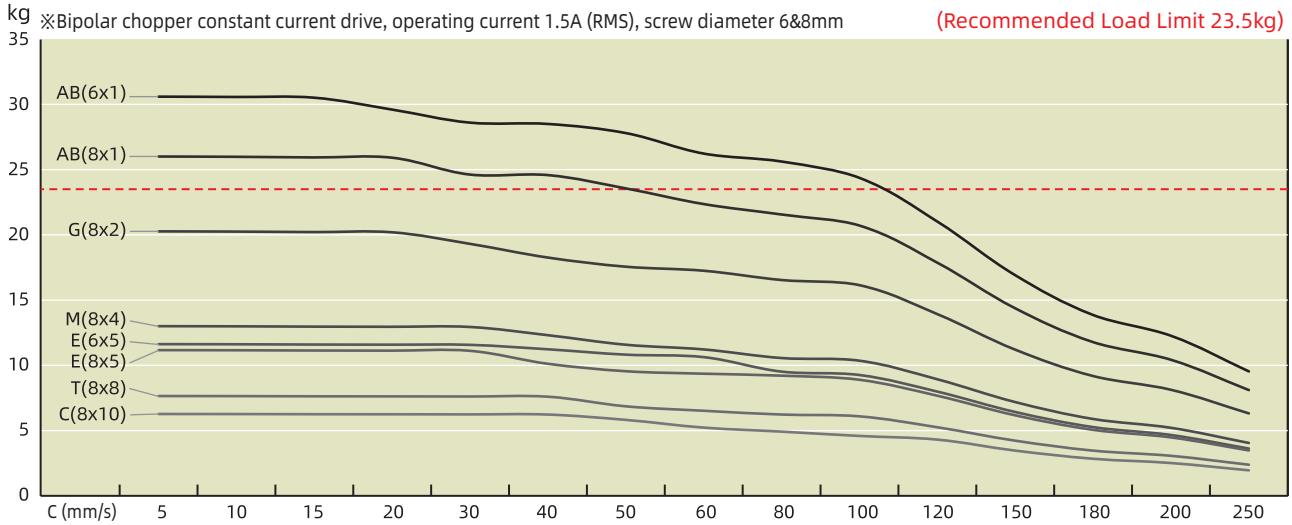

C (mm/s)	5	10	15	20	30	40	50	60	80	100	120	150	180	200	250
T (mm/s)	4	8	12	16	24	32	40	48	64	80	96	120	144	160	200
E (mm/s)	2.5	5	7.5	10	15	20	25	30	40	50	60	75	90	100	125
M (mm/s)	2	4	6	8	12	16	20	24	32	40	48	60	72	80	100
G (mm/s)	1	2	3	4	6	8	10	12	16	20	24	30	36	40	50
AB (mm/s)	0.5	1	1.5	2	3	4	5	6	8	10	12	15	18	20	25
Speed r/min	30	60	90	120	180	240	300	360	480	600	720	900	1080	1200	1500
Pulse pps	100	200	300	400	600	800	1000	1200	1600	2000	2400	3000	3600	4000	5000

TEST CONDITION

Testing Voltage: 24Vdc, Driver Model: DS-OLS2-FPD bipolar, chopper driver at rated current (rms).
Motor thrust may vary depending on voltage and driver conditions. 50% thrust margin is recommended.

Size 17 (42mm) Series

Size 17 [42mm] Stepper Lead Screw Linear Actuator is widely used for linear movement applications, providing up to 330N of continuous thrust.

Motor Characteristics

Motor	Voltage (V)	Current (A [RMS])	Resistance (Ω)	Inductance (mH)	Weight (g)	Lead Wire No.	Motor Length (mm)
17-2105	7.2	0.5	14.4	19.8	254	4	34.1
17-2110	3.8	1	3.8	5	254	4	34.1
17-2115	2.85	1.5	1.9	2.2	254	4	34.1
17-2205	11	0.5	22	46	386	4	48.1
17-2212	4.5	1.2	3.8	8	386	4	48.1
17-2225	2.5	2.5	1	1.8	386	4	48.1

Note : Motor Insulation Class B, Motor Temperature Rise 80°C, Ambient Temperature -20°C~55°C

Available Lead Screw and Travel per Step

Screw Dia. (inch)	Screw Dia. (mm)	Lead (inch)	Lead (mm)	Lead Code	Travel Per Step @1.8° (mm)*	Travel Per Step @0.9° (mm)*
0.25	6.35	0.024	0.6096	AA	0.003	0.0015
0.25	6.35	0.025	0.635	A	0.0032	0.0016
0.25	6.35	0.048	1.2192	B	0.0061	0.003
0.25	6.35	0.05	1.27	D	0.0064	0.0032
0.25	6.35	0.0625	1.5875	F	0.0079	0.004
0.25	6.35	0.096	2.4384	J	0.0122	0.0061
0.25	6.35	0.1	2.54	K	0.0127	0.0064
0.25	6.35	0.125	3.175	L	0.0159	0.0079
0.25	6.35	0.192	4.8768	Q	0.0244	0.0122
0.25	6.35	0.2	5.08	R	0.0254	0.0127
0.25	6.35	0.25	6.35	S	0.0318	0.0159
0.25	6.35	0.3333	8.4667	U	0.0423	0.0212
0.25	6.35	0.384	9.7536	W	0.0488	0.0244
0.25	6.35	0.5	12.7	Y	0.0635	0.0318
0.25	6.35	1	25.4	Z	0.127	0.0635
0.236 / 0.25 / 0.315	6 / 6.35 / 8	0.0394	1	AB	0.005	0.0025
0.25 / 0.315	6.35 / 8	0.0787	2	G	0.01	0.005
0.315	8	0.1575	4	M	0.02	0.01
0.315	8	0.315	8	T	0.04	0.02
0.236 / 0.315	6 / 8	0.1969	5	E	0.025	0.0125
0.315	8	0.3937	10	C	0.05	0.025
0.25	6.35	0.0313	0.794	N	0.004	0.002

* Motor wiring and screw lead could be customized according to customer's request

* Value Truncated

* 9.525mm diameter screw only can be applied in External Type

Size 17 (42mm) Series

Dimensional Drawings : External Actuator

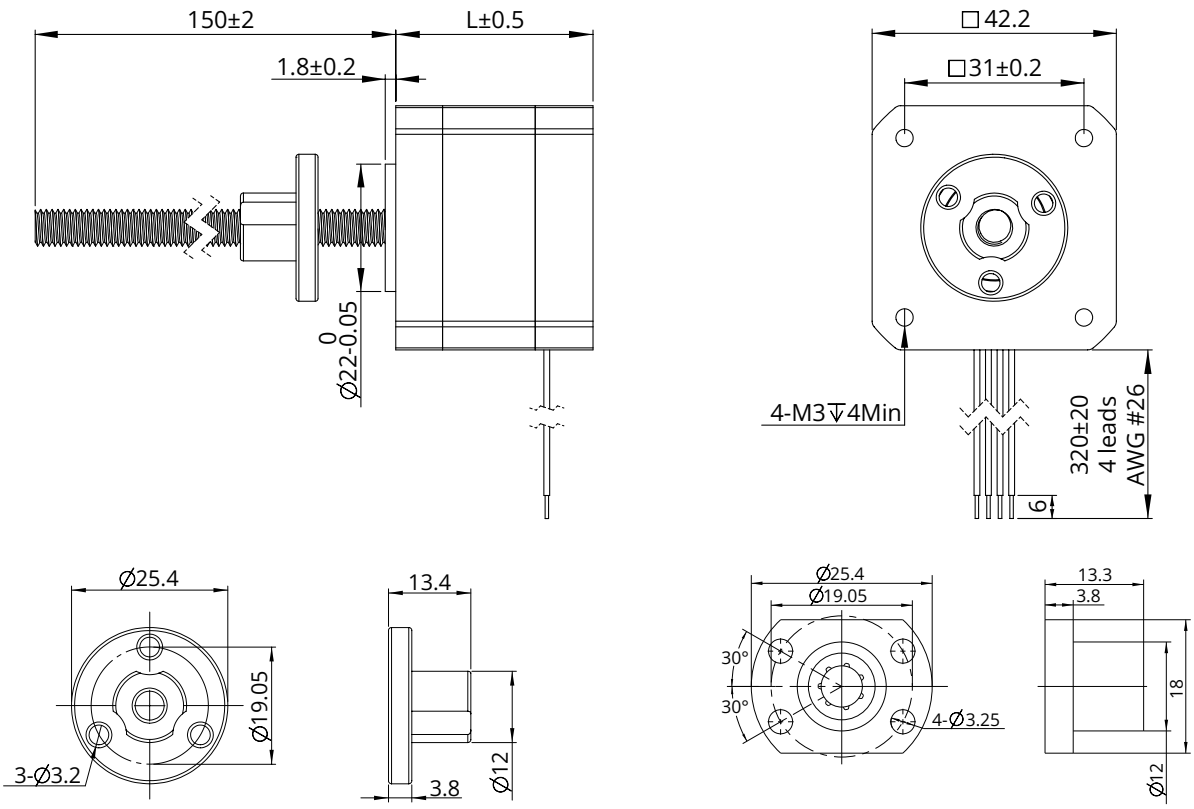

Dimensional Drawings : Non-Captive Actuator

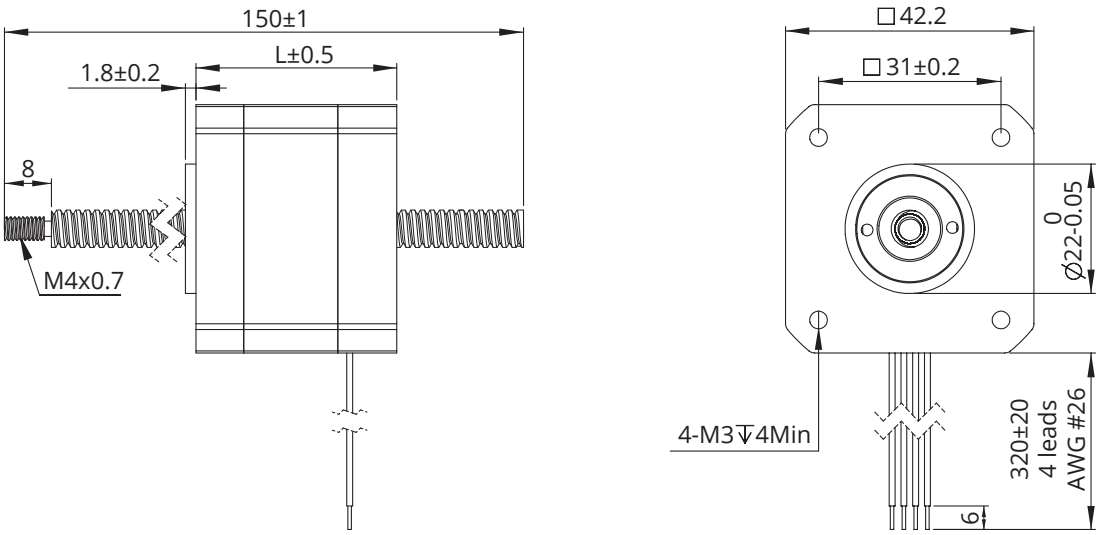

Note : All drawings are 1st-angle projection - ISO Compliant (3D models available)

Size 17 (42mm) Series

Dimensional Drawings : Electric Cylinder (Captive) Actuator

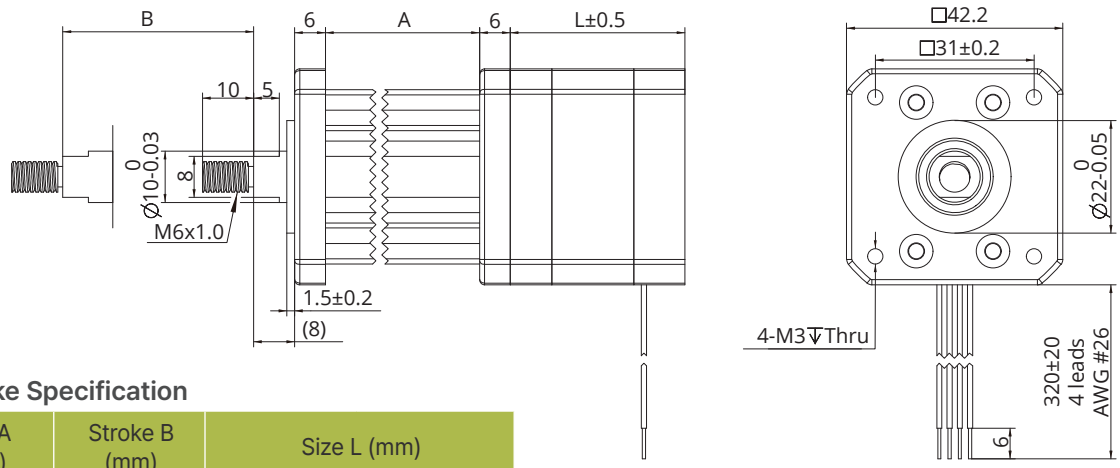

Stroke Specification

Size A (mm)	Stroke B (mm)	Size L (mm)	
35.7	12.7	Single stack motor 34.1mm	Double stack motor 48.1mm
42.05	19.05		
48.4	25.4		
54.8	31.8		
61.1	38.1		
73.8	50.8		
86.5	63.5		

Dimensional Drawings : Kaptive Actuator

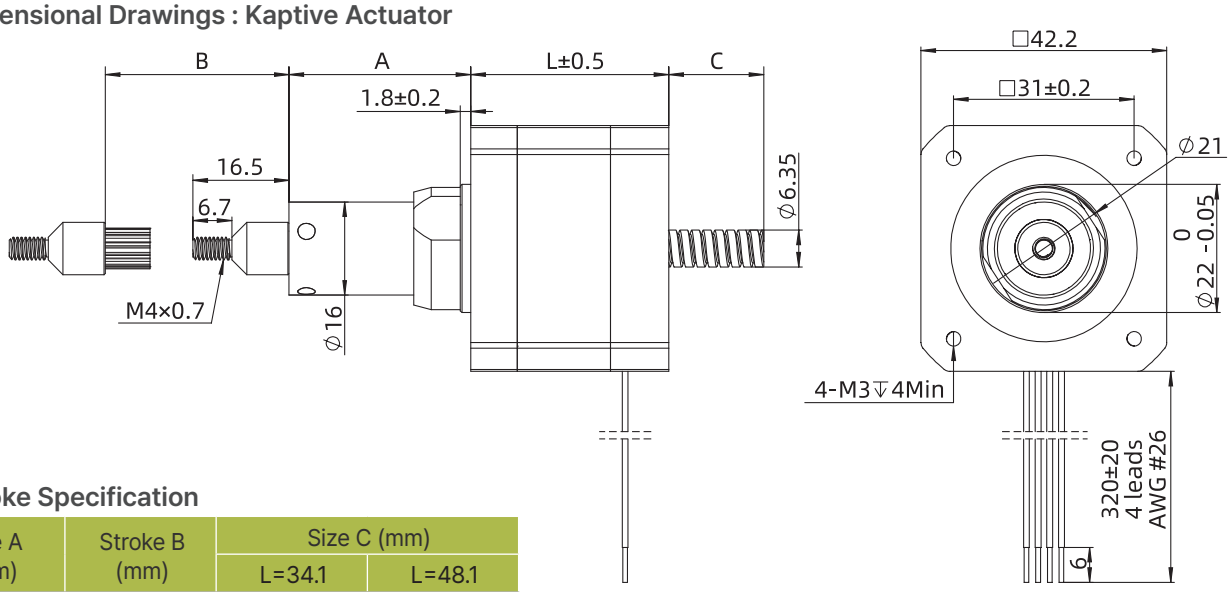

Stroke Specification

Size A (mm)	Stroke B (mm)	Size C (mm)	
		L=34.1	L=48.1
18.5	12.7	3.6	0
24.85	19.05	9.95	4.95
31.2	25.4	16.3	11.3
37.55	31.75	22.65	17.65
43.9	38.1	29	24
56.6	50.8	41.7	36.7
69.3	63.5	54.4	49.4

For customized options, please contact DINGS' or your local distributor

Size 17 (42mm) Series

Speed Thrust Curves

Size 17 Single Stack Speed Thrust Curves

※Bipolar chopper constant current drive, operating current 1.5A (RMS), screw diameter 6.35mm (Recommended Load Limit 23.5kg)

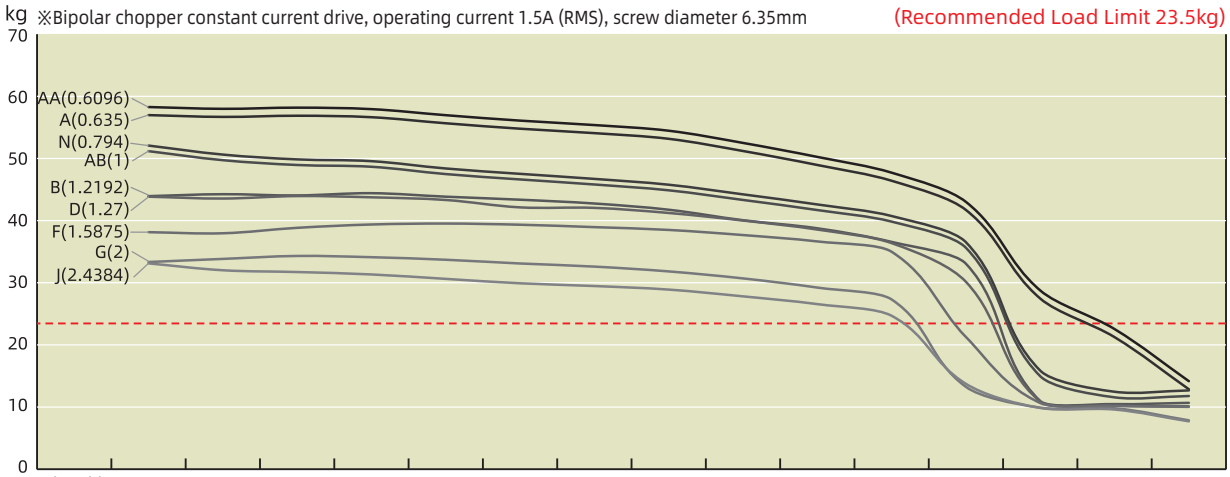

J (mm/s)	1.22	2.44	3.66	4.88	7.32	9.75	12.19	14.63	19.51	24.38	29.26	36.58	43.89	48.77	60.96
G (mm/s)	1	2	3	4	6	8	10	12	16	20	24	30	36	40	50
F (mm/s)	0.79	1.59	2.38	3.18	4.76	6.35	7.94	9.53	12.7	15.88	19.05	23.81	28.58	31.75	39.69
D (mm/s)	0.64	1.27	1.91	2.54	3.81	5.08	6.35	7.62	10.16	12.7	15.24	19.05	22.86	25.4	31.75
B (mm/s)	0.61	1.22	1.83	2.44	3.66	4.88	6.1	7.32	9.75	12.19	14.63	18.29	21.95	24.38	30.48
AB (mm/s)	0.5	1	1.5	2	3	4	5	6	8	10	12	15	18	20	25
N (mm/s)	0.4	0.79	1.19	1.59	2.38	3.18	3.97	4.76	6.35	7.94	9.53	11.91	14.29	15.88	19.85
A (mm/s)	0.32	0.64	0.95	1.27	1.91	2.54	3.18	3.81	5.08	6.35	7.62	9.53	11.43	12.7	15.88
AA (mm/s)	0.3	0.61	0.91	1.22	1.83	2.44	3.05	3.66	4.88	6.1	7.32	9.14	10.97	12.19	15.24
Speed r/min	30	60	90	120	180	240	300	360	480	600	720	900	1080	1200	1500
Pulse pps	100	200	300	400	600	800	1000	1200	1600	2000	2400	3000	3600	4000	5000

Size 17 Single Stack Speed Thrust Curves

※Bipolar chopper constant current drive, operating current 1.5A (RMS), screw diameter 6.35mm (Recommended Load Limit 23.5kg)

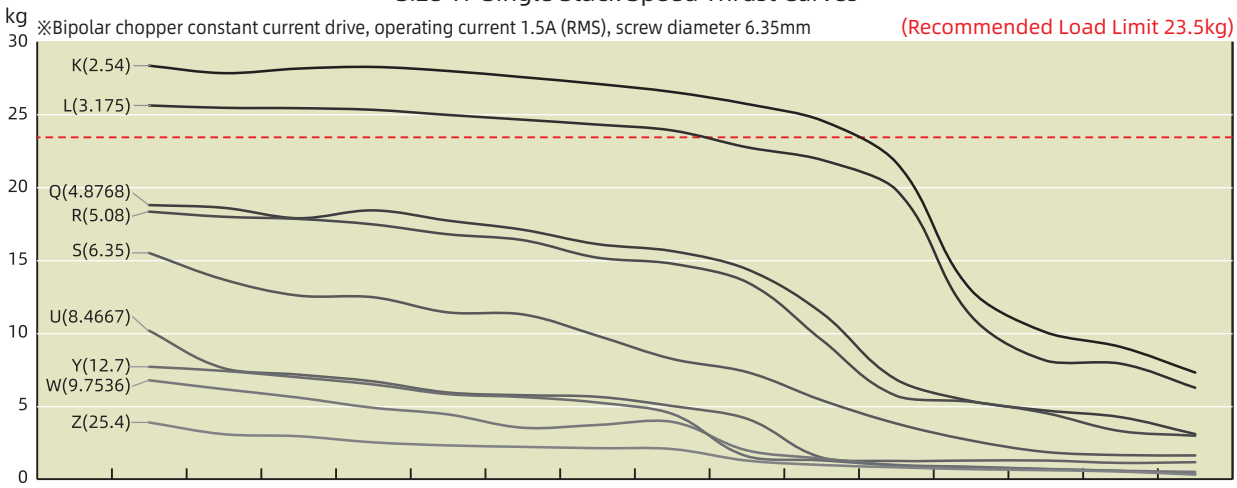

Z (mm/s)	12.7	25.4	38.1	50.8	76.2	101.6	127	152.4	203.2	254	304.8	381	457.2	508	635
Y (mm/s)	6.35	12.7	19.05	25.4	38.1	50.8	63.5	76.2	101.6	127	152.4	190.5	228.6	254	317.5
W (mm/s)	4.88	9.75	14.63	19.51	29.26	39.01	48.77	58.52	78.03	97.54	117.04	146.3	175.56	195.07	243.84
U (mm/s)	4.23	8.47	12.7	16.93	25.4	33.87	42.33	50.8	67.73	84.67	101.6	127	152.4	169.33	211.67
S (mm/s)	3.18	6.35	9.53	12.7	19.05	25.4	31.75	38.1	50.8	63.5	76.2	95.25	114.3	127	158.75
R (mm/s)	2.54	5.08	7.62	10.16	15.24	20.32	25.4	30.48	40.64	50.8	60.96	76.2	91.44	101.6	127
Q (mm/s)	2.44	4.88	7.32	9.75	14.63	19.51	24.38	29.26	39.01	48.77	58.52	73.15	87.78	97.54	121.92
L (mm/s)	1.59	3.18	4.76	6.35	9.53	12.7	15.88	19.05	25.4	31.75	38.1	47.63	57.15	63.5	79.38
K (mm/s)	1.27	2.54	3.81	5.08	7.62	10.16	12.7	15.24	20.32	25.4	30.48	38.1	45.72	50.8	63.5
Speed r/min	30	60	90	120	180	240	300	360	480	600	720	900	1080	1200	1500
Pulse pps	100	200	300	400	600	800	1000	1200	1600	2000	2400	3000	3600	4000	5000

TEST CONDITION

Testing Voltage: 24Vdc, Driver Model: DS-OLS2-FPD bipolar, chopper driver at rated current (rms).
Motor thrust may vary depending on voltage and driver conditions. 50% thrust margin is recommended.

Size 17 (42mm) Series

Size 17 Single Stack Speed Thrust Curves

※Bipolar chopper constant current drive, operating current 1.5A (RMS), screw diameter 6&8mm (Recommended Load Limit 23.5kg)

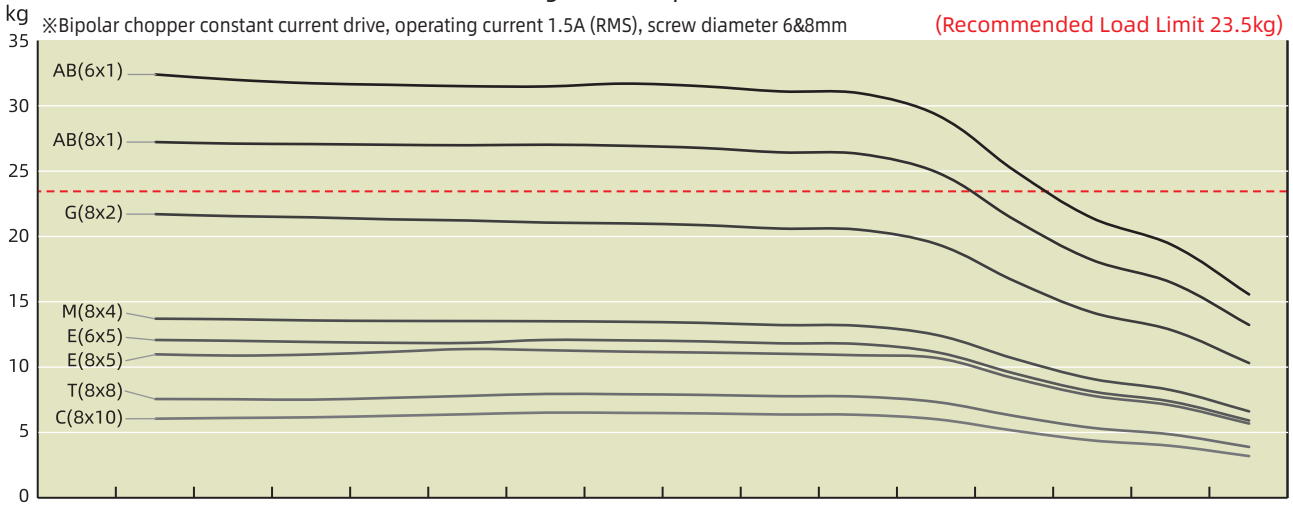

C (mm/s)	5	10	15	20	30	40	50	60	80	100	120	150	180	200	250
T (mm/s)	4	8	12	16	24	32	40	48	64	80	96	120	144	160	200
E (mm/s)	2.5	5	7.5	10	15	20	25	30	40	50	60	75	90	100	125
M (mm/s)	2	4	6	8	12	16	20	24	32	40	48	60	72	80	100
G (mm/s)	1	2	3	4	6	8	10	12	16	20	24	30	36	40	50
AB (mm/s)	0.5	1	1.5	2	3	4	5	6	8	10	12	15	18	20	25
Speed r/min	30	60	90	120	180	240	300	360	480	600	720	900	1080	1200	1500
Pulse pps	100	200	300	400	600	800	1000	1200	1600	2000	2400	3000	3600	4000	5000

Size 17 Double Stack Speed Thrust Curves

※Bipolar chopper constant current drive, operating current 2.5A (RMS), screw diameter 6.35mm (Recommended Load Limit 23.5kg)

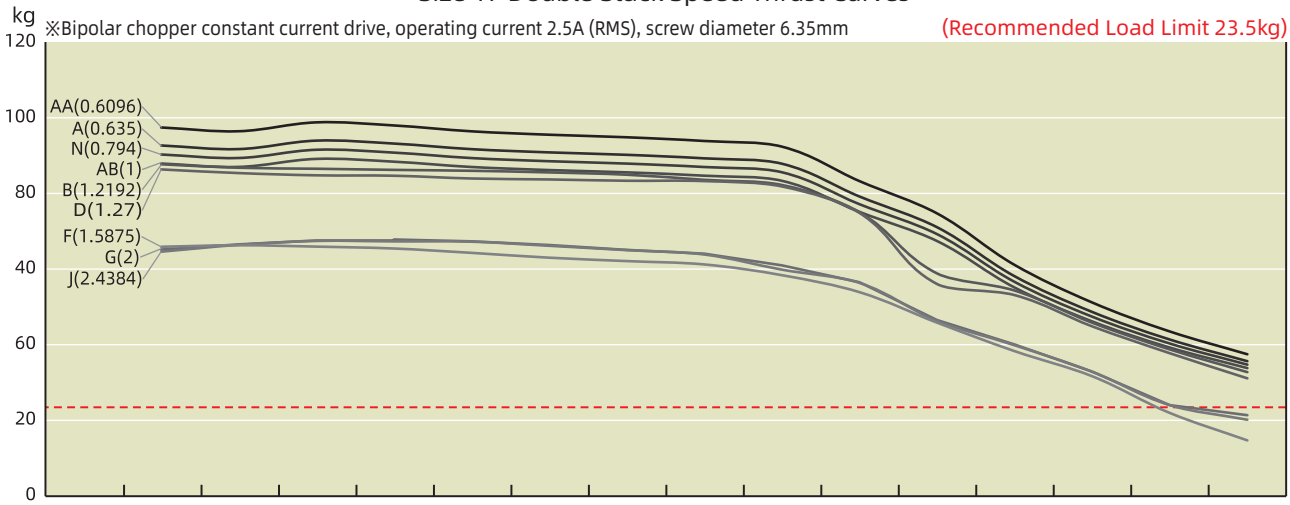

J (mm/s)	1.22	2.44	3.66	4.88	7.32	9.75	12.19	14.63	19.51	24.38	29.26	36.58	43.89	48.77	60.96
G (mm/s)	1	2	3	4	6	8	10	12	16	20	24	30	36	40	50
F (mm/s)	0.79	1.59	2.38	3.18	4.76	6.35	7.94	9.53	12.7	15.88	19.05	23.81	28.58	31.75	39.69
D (mm/s)	0.64	1.27	1.91	2.54	3.81	5.08	6.35	7.62	10.16	12.7	15.24	19.05	22.86	25.4	31.75
B (mm/s)	0.61	1.22	1.83	2.44	3.66	4.88	6.1	7.32	9.75	12.19	14.63	18.29	21.95	24.38	30.48
AB (mm/s)	0.5	1	1.5	2	3	4	5	6	8	10	12	15	18	20	25
N (mm/s)	0.4	0.79	1.19	1.59	2.38	3.18	3.97	4.76	6.35	7.94	9.53	11.91	14.29	15.88	19.85
A (mm/s)	0.32	0.64	0.95	1.27	1.91	2.54	3.18	3.81	5.08	6.35	7.62	9.53	11.43	12.7	15.88
AA (mm/s)	0.3	0.61	0.91	1.22	1.83	2.44	3.05	3.66	4.88	6.1	7.32	9.14	10.97	12.19	15.24
Speed r/min	30	60	90	120	180	240	300	360	480	600	720	900	1080	1200	1500
Pulse pps	100	200	300	400	600	800	1000	1200	1600	2000	2400	3000	3600	4000	5000

TEST CONDITION

Testing Voltage: 24Vdc, Driver Model: DS-OLS2-FPD bipolar, chopper driver at rated current (rms).
Motor thrust may vary depending on voltage and driver conditions. 50% thrust margin is recommended.

Size 17 (42mm) Series

Size 17 Double Stack Speed Thrust Curves

※Bipolar chopper constant current drive, operating current 2.5A (RMS), screw diameter 6.35mm (Recommended Load Limit 23.5kg)

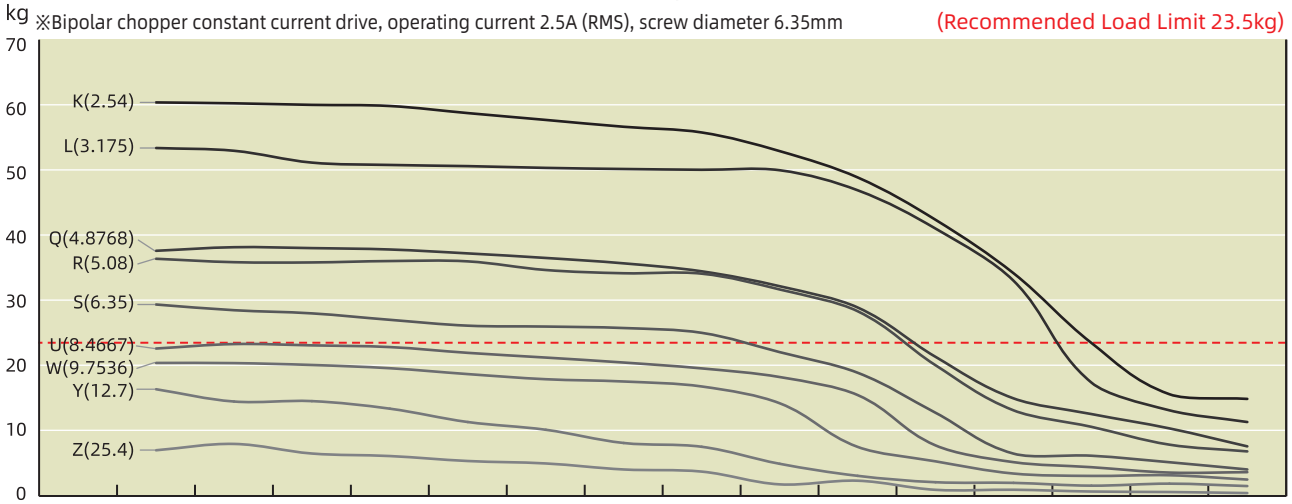

Z (mm/s)	12.7	25.4	38.1	50.8	76.2	101.6	127	152.4	203.2	254	304.8	381	457.2	508	635
Y (mm/s)	6.35	12.7	19.05	25.4	38.1	50.8	63.5	76.2	101.6	127	152.4	190.5	228.6	254	317.5
W (mm/s)	4.88	9.75	14.63	19.51	29.26	39.01	48.77	58.52	78.03	97.54	117.04	146.3	175.56	195.07	243.84
U (mm/s)	4.23	8.47	12.7	16.93	25.4	33.87	42.33	50.8	67.73	84.67	101.6	127	152.4	169.33	211.67
S (mm/s)	3.18	6.35	9.53	12.7	19.05	25.4	31.75	38.1	50.8	63.5	76.2	95.25	114.3	127	158.75
R (mm/s)	2.54	5.08	7.62	10.16	15.24	20.32	25.4	30.48	40.64	50.8	60.96	76.2	91.44	101.6	127
Q (mm/s)	2.44	4.88	7.32	9.75	14.63	19.51	24.38	29.26	39.01	48.77	58.52	73.15	87.78	97.54	121.92
L (mm/s)	1.59	3.18	4.76	6.35	9.53	12.7	15.88	19.05	25.4	31.75	38.1	47.63	57.15	63.5	79.38
K (mm/s)	1.27	2.54	3.81	5.08	7.62	10.16	12.7	15.24	20.32	25.4	30.48	38.1	45.72	50.8	63.5
Speed r/min	30	60	90	120	180	240	300	360	480	600	720	900	1080	1200	1500
Pulse pps	100	200	300	400	600	800	1000	1200	1600	2000	2400	3000	3600	4000	5000

Size 17 Double Stack Speed Thrust Curves

※Bipolar chopper constant current drive, operating current 2.5A (RMS), screw diameter 6&8mm (Recommended Load Limit 23.5kg)

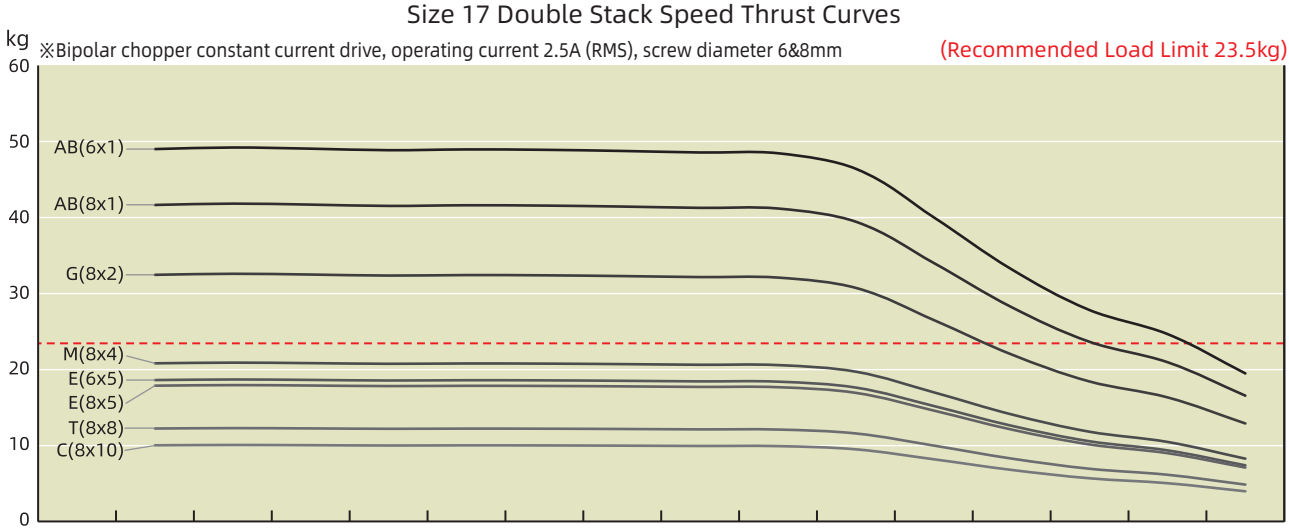

C (mm/s)	5	10	15	20	30	40	50	60	80	100	120	150	180	200	250
T (mm/s)	4	8	12	16	24	32	40	48	64	80	96	120	144	160	200
E (mm/s)	2.5	5	7.5	10	15	20	25	30	40	50	60	75	90	100	125
M (mm/s)	2	4	6	8	12	16	20	24	32	40	48	60	72	80	100
G (mm/s)	1	2	3	4	6	8	10	12	16	20	24	30	36	40	50
AB (mm/s)	0.5	1	1.5	2	3	4	5	6	8	10	12	15	18	20	25
Speed r/min	30	60	90	120	180	240	300	360	480	600	720	900	1080	1200	1500
Pulse pps	100	200	300	400	600	800	1000	1200	1600	2000	2400	3000	3600	4000	5000

TEST CONDITION

Testing Voltage: 24Vdc, Driver Model: DS-OLS2-FPD bipolar, chopper driver at rated current (rms).
Motor thrust may vary depending on voltage and driver conditions. 50% thrust margin is recommended.

Size 23 (57mm) Series

Size 23 [57mm] Stepper Lead Screw Linear Actuator provides high performance, a longer working cycle, and is capable of 910N.

Motor Characteristics

Motor	Voltage (V)	Current (A [RMS])	Resistance (Ω)	Inductance (mH)	Weight (g)	Lead Wire No.	Motor Length (mm)
23-2110	6.4	1	6.4	16.4	585	4	45
23-2120	3.5	2	1.75	4.1	585	4	45
23-2130	2.4	3	0.8	1.7	585	4	45
23-2210	11.5	1	11.5	32	880	4	65
23-2225	5	2.5	2	5.2	880	4	65
23-2240	2.8	4	0.7	2	880	4	65

Note : Motor Insulation Class B, Motor Temperature Rise 80°C, Ambient Temperature -20°C~55°C

Available Lead Screw and Travel per Step

Screw Dia. (inch)	Screw Dia. (mm)	Lead (inch)	Lead (mm)	Lead Code	Travel Per Step @1.8° (mm)*	Travel Per Step @0.9° (mm)*
0.375	9.525	0.025	0.635	A	0.0032	0.0016
0.375	9.525	0.05	1.27	D	0.0064	0.0032
0.375	9.525	0.0625	1.5875	F	0.0079	0.004
0.375	9.525	0.083	2.1167	H	0.0106	0.0053
0.375	9.525	0.1	2.54	K	0.0127	0.0064
0.375	9.525	0.125	3.175	L	0.0159	0.0079
0.375	9.525	0.167	4.2333	P	0.0212	0.0106
0.375	9.525	0.2	5.08	R	0.0254	0.0127
0.375	9.525	0.25	6.35	S	0.0318	0.0159
0.375	9.525	0.375	9.525	V	0.0476	0.0238
0.375	9.525	0.384	9.7536	W	0.0488	0.0244
0.375	9.525	0.4	10.16	X	0.0508	0.0254
0.375	9.525	0.5	12.7	Y	0.0635	0.0318
0.375 / 0.5	9.525 / 12.7	1	25.4	Z	0.127	0.0635
0.394 / 0.472	10 / 12	0.0787	2	G	0.01	0.005
0.472	12	0.1969	5	E	0.025	0.0125
0.394 / 0.472	10 / 12	0.3937	10	C	0.05	0.025
0.394	10	0.7874	20	I	0.1	0.05
0.472	12	0.5096	15	CE	0.075	0.0375
0.472	12	0.9843	25	IE	0.125	0.0625

* Motor wiring and screw lead could be customized according to customer's request

* Value Truncated

* 15.875mm diameter screw only can be applied in External Type

Size 23 (57mm) Series

Dimensional Drawings : External Actuator

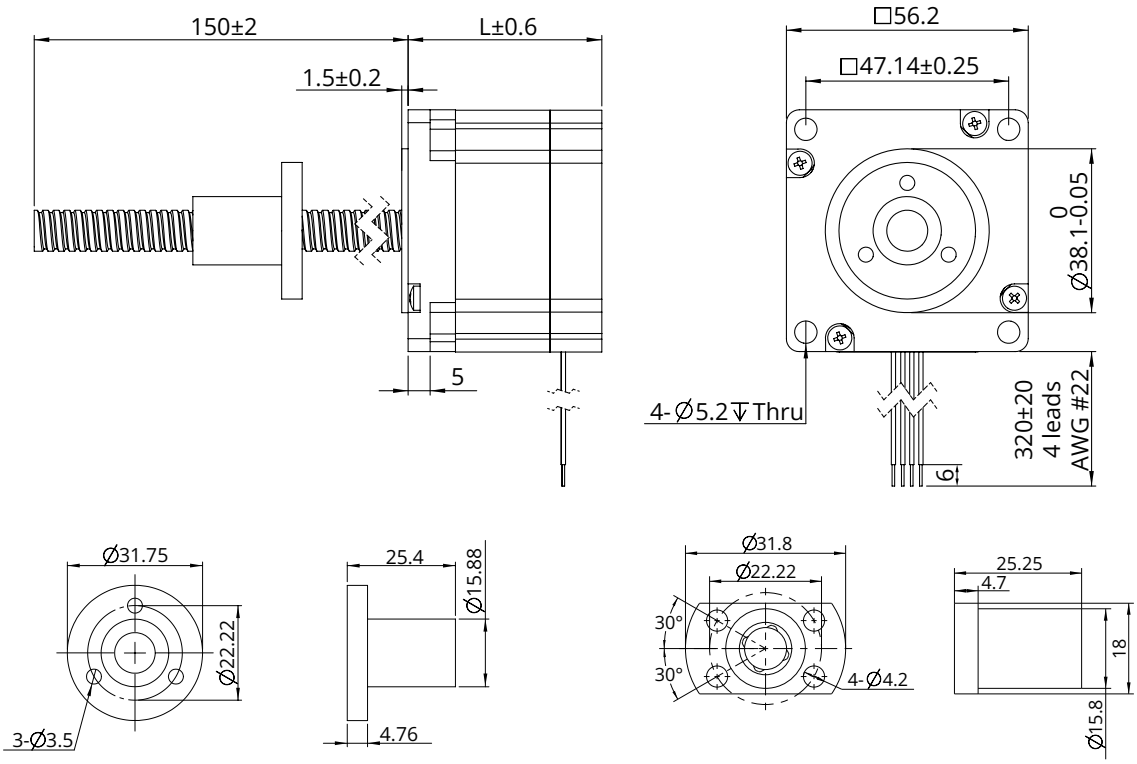

Dimensional Drawings : Non-Captive Actuator

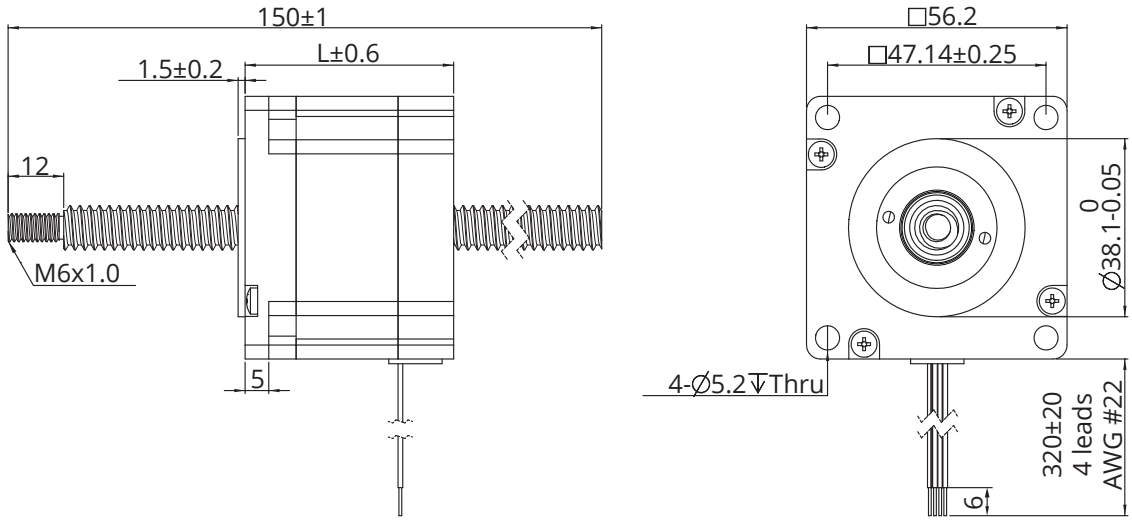

Note : All drawings are 1st-angle projection - ISO Compliant (3D models available)

Size 23 (57mm) Series

Dimensional Drawings : Electric Cylinder (Captive) Actuator

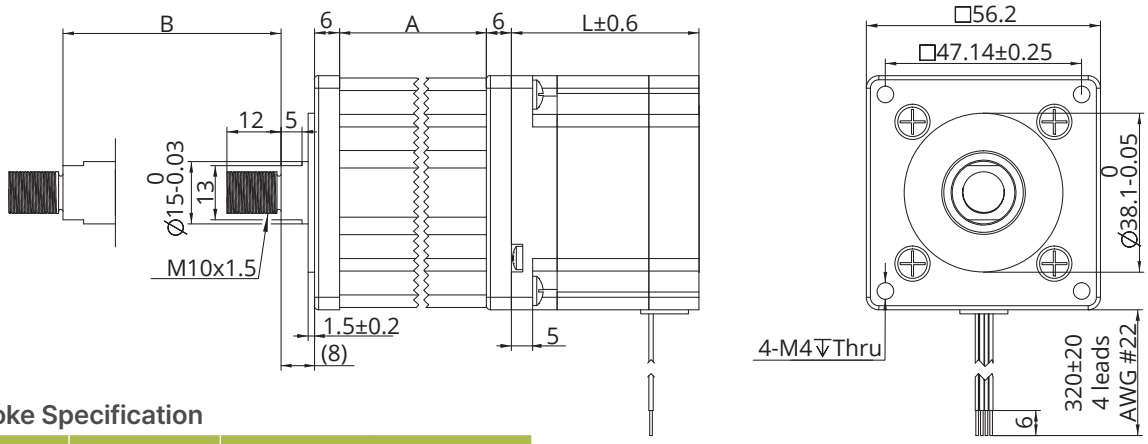

Stroke Specification

Size A (mm)	Stroke B (mm)	Size L (mm)	
45.7	12.7	Single stack motor 45mm	Double stack motor 65mm
52.05	19.05		
58.4	25.4		
64.8	31.8		
71.1	38.1		
83.8	50.8		
96.5	63.5		

Dimensional Drawings : Kaptive Actuator

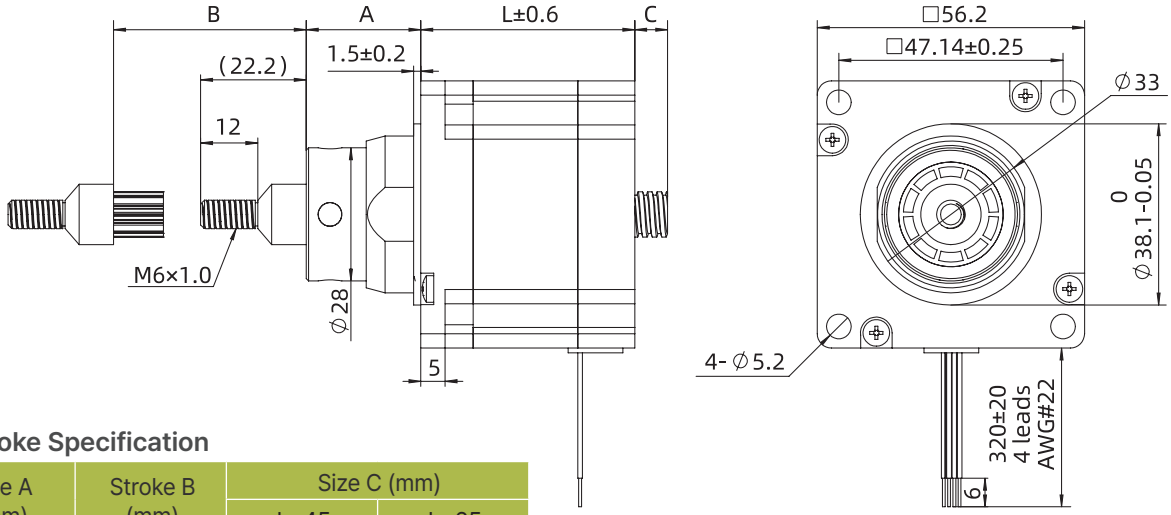

Stroke Specification

Size A (mm)	Stroke B (mm)	Size C (mm)	
		L=45	L=65
24.2	12.7	5.8	0
30.55	19.05	11.65	1.65
36.9	25.4	18	8
43.25	31.75	24.35	14.35
49.6	38.1	30.7	20.7
62.3	50.8	43.4	33.4
75	63.5	56.1	46.1

For customized options, please contact DINGS' or your local distributor

Size 23 (57mm) Series

Speed Thrust Curves

Size 23 Single Stack Speed Thrust Curves

※Bipolar chopper constant current drive, operating current 2A (RMS), screw diameter 9.525mm (Recommended Load Limit 92.5kg)

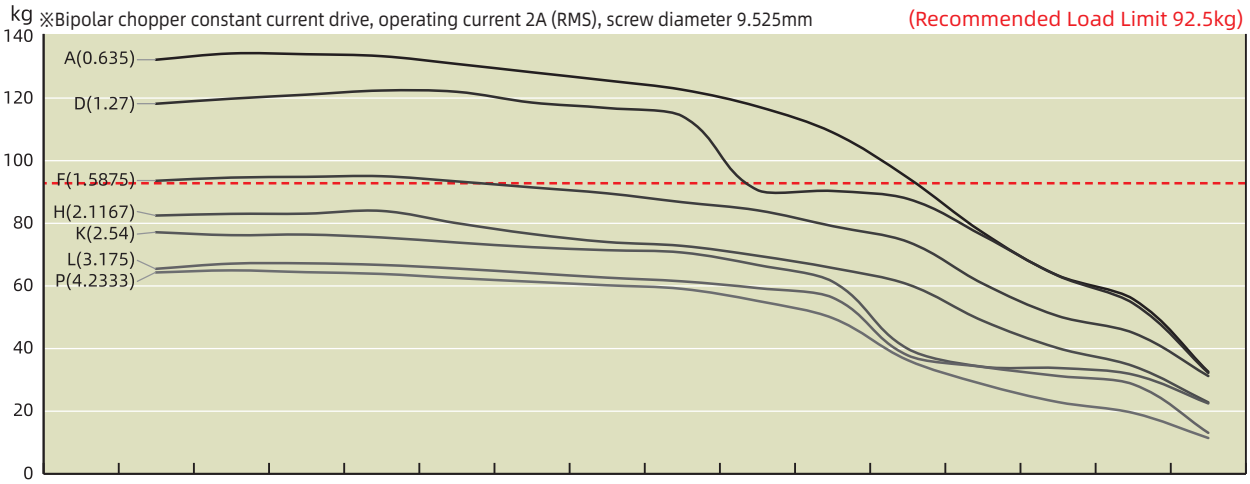

P (mm/s)	2.12	4.23	6.35	8.47	12.7	16.93	21.17	25.4	33.87	42.33	50.8	63.5	76.2	84.66	105.83
L (mm/s)	1.59	3.18	4.76	6.35	9.53	12.7	15.88	19.05	25.4	31.75	38.1	47.63	57.15	63.5	79.38
K (mm/s)	1.27	2.54	3.81	5.08	7.62	10.16	12.7	15.24	20.32	25.4	30.48	38.1	45.72	50.8	63.5
H (mm/s)	1.06	2.12	3.18	4.23	6.35	8.47	10.58	12.7	16.93	21.17	25.4	31.75	38.1	42.33	52.92
F (mm/s)	0.79	1.59	2.38	3.18	4.76	6.35	7.94	9.53	12.7	15.88	19.05	23.81	28.58	31.75	39.69
D (mm/s)	0.64	1.27	1.91	2.54	3.81	5.08	6.35	7.62	10.16	12.7	15.24	19.05	22.86	25.4	31.75
A (mm/s)	0.32	0.64	0.95	1.27	1.91	2.54	3.18	3.81	5.08	6.35	7.62	9.53	11.43	12.7	15.88
Speed r/min	30	60	90	120	180	240	300	360	480	600	720	900	1080	1200	1500
Pulse pps	100	200	300	400	600	800	1000	1200	1600	2000	2400	3000	3600	4000	5000

Size 23 Single Stack Speed Thrust Curves

※Bipolar chopper constant current drive, operating current 2A (RMS), screw diameter 9.525mm (Recommended Load Limit 92.5kg)

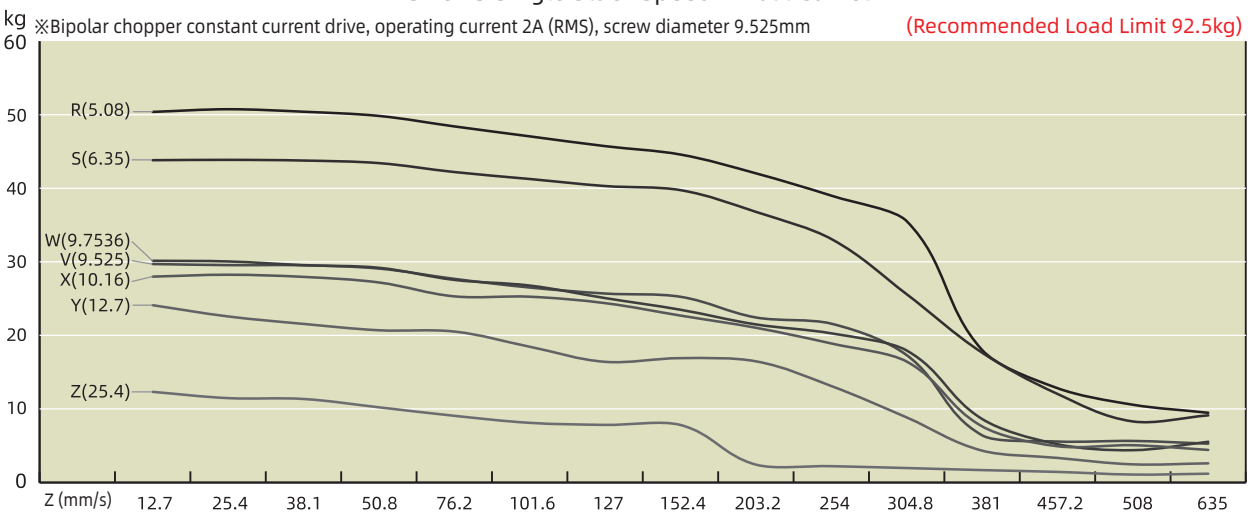

Z (mm/s)	12.7	25.4	38.1	50.8	76.2	101.6	127	152.4	203.2	254	304.8	381	457.2	508	635
Y (mm/s)	6.35	12.7	19.05	25.4	38.1	50.8	63.5	76.2	101.6	127	152.4	190.5	228.6	254	317.5
X (mm/s)	5.08	10.16	15.24	20.32	30.48	40.64	50.8	60.96	81.28	101.6	121.92	152.4	182.88	203.2	254
W (mm/s)	4.88	9.75	14.63	19.51	29.26	39.01	48.77	58.52	78.03	97.54	117.04	146.3	175.56	195.07	243.84
V (mm/s)	4.76	9.53	14.29	19.05	28.58	38.1	47.63	57.15	76.2	95.25	114.3	142.88	171.45	190.5	238.13
S (mm/s)	3.18	6.35	9.53	12.7	19.05	25.4	31.75	38.1	50.8	63.5	76.2	95.25	114.3	127	158.75
R (mm/s)	2.54	5.08	7.62	10.16	15.24	20.32	25.4	30.48	40.64	50.8	60.96	76.2	91.44	101.6	127
Speed r/min	30	60	90	120	180	240	300	360	480	600	720	900	1080	1200	1500
Pulse pps	100	200	300	400	600	800	1000	1200	1600	2000	2400	3000	3600	4000	5000

TEST CONDITION

Testing Voltage: 48Vdc, Driver Model: DS-OLS4-FPD bipolar, chopper driver at rated current (rms).
Motor thrust may vary depending on voltage and driver conditions. 50% thrust margin is recommended.

Size 23 (57mm) Series

Size 23 Single Stack Speed Thrust Curves

※Bipolar chopper constant current drive, operating current 2A (RMS), screw diameter 10&12&12.7mm (Recommended Load Limit 92.5kg)

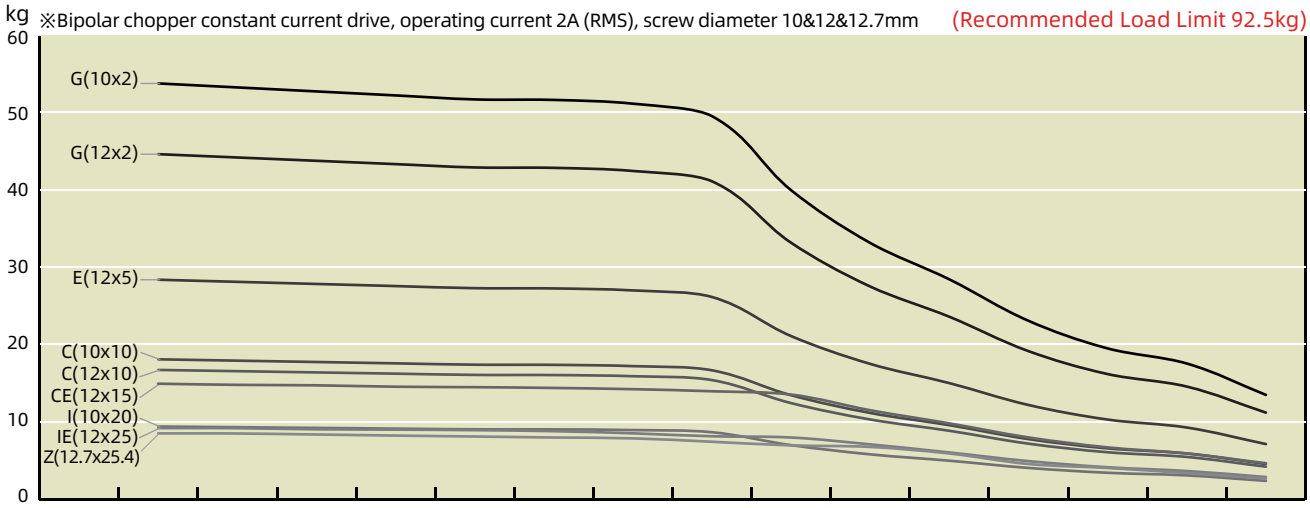

Z(mm/s)	12.7	25.4	38.1	50.8	76.2	101.6	127	152.4	203.2	254	304.8	381	457.2	508	635
IE(mm/s)	12.5	25	37.5	50	75	100	125	150	200	250	300	375	450	500	625
I(mm/s)	10	20	30	40	60	80	100	120	160	200	240	300	360	400	500
CE(mm/s)	7.5	15	22.5	30	45	60	75	90	120	150	180	225	270	300	375
C(mm/s)	5	10	15	20	30	40	50	60	80	100	120	150	180	200	250
E(mm/s)	2.5	5	7.5	10	15	20	25	30	40	50	60	75	90	100	125
G(mm/s)	1	2	3	4	6	8	10	12	16	20	24	30	36	40	50
Speed r/min	30	60	90	120	180	240	300	360	480	600	720	900	1080	1200	1500
Pulse pps	100	200	300	400	600	800	1000	1200	1600	2000	2400	3000	3600	4000	5000

Size 23 Double Stack Speed Thrust Curves

※Bipolar chopper constant current drive, operating current 2.5A (RMS), screw diameter 9.525mm (Recommended Load Limit 92.5kg)

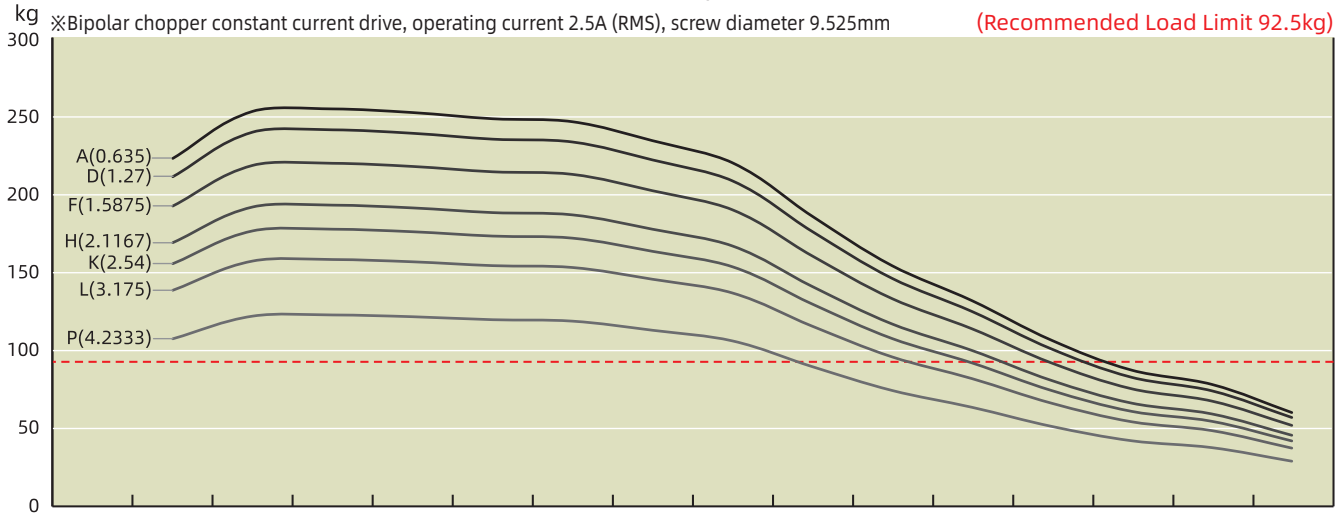

P (mm/s)	2.12	4.23	6.35	8.47	12.7	16.93	21.17	25.4	33.87	42.33	50.8	63.5	76.2	84.66	105.83
L (mm/s)	1.59	3.18	4.76	6.35	9.53	12.7	15.88	19.05	25.4	31.75	38.1	47.63	57.15	63.5	79.38
K (mm/s)	1.27	2.54	3.81	5.08	7.62	10.16	12.7	15.24	20.32	25.4	30.48	38.1	45.72	50.8	63.5
H (mm/s)	1.06	2.12	3.18	4.23	6.35	8.47	10.58	12.7	16.93	21.17	25.4	31.75	38.1	42.33	52.92
F (mm/s)	0.79	1.59	2.38	3.18	4.76	6.35	7.94	9.53	12.7	15.88	19.05	23.81	28.58	31.75	39.69
D (mm/s)	0.64	1.27	1.91	2.54	3.81	5.08	6.35	7.62	10.16	12.7	15.24	19.05	22.86	25.4	31.75
A (mm/s)	0.32	0.64	0.95	1.27	1.91	2.54	3.18	3.81	5.08	6.35	7.62	9.53	11.43	12.7	15.88
Speed r/min	30	60	90	120	180	240	300	360	480	600	720	900	1080	1200	1500
Pulse pps	100	200	300	400	600	800	1000	1200	1600	2000	2400	3000	3600	4000	5000

TEST CONDITION

Testing Voltage: 48Vdc, Driver Model: DS-OLS4-FPD bipolar, chopper driver at rated current (rms).
Motor thrust may vary depending on voltage and driver conditions. 50% thrust margin is recommended.

Size 23 (57mm) Series

Size 23 Double Stack Speed Thrust Curves

※Bipolar chopper constant current drive, operating current 2.5A (RMS), screw diameter 9.525mm (Recommended Load Limit 92.5kg)

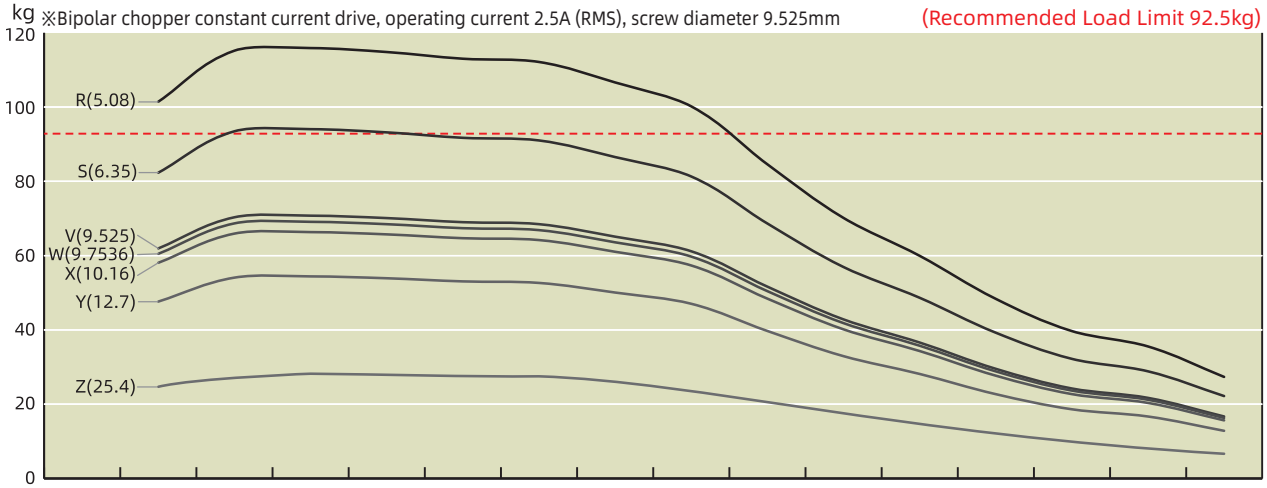

Z (mm/s)	12.7	25.4	38.1	50.8	76.2	101.6	127	152.4	203.2	254	304.8	381	457.2	508	635
Y (mm/s)	6.35	12.7	19.05	25.4	38.1	50.8	63.5	76.2	101.6	127	152.4	190.5	228.6	254	317.5
X (mm/s)	5.08	10.16	15.24	20.32	30.48	40.64	50.8	60.96	81.28	101.6	121.92	152.4	182.88	203.2	254
W (mm/s)	4.88	9.75	14.63	19.51	29.26	39.01	48.77	58.52	78.03	97.54	117.04	146.3	175.56	195.07	243.84
V (mm/s)	4.76	9.53	14.29	19.05	28.58	38.1	47.63	57.15	76.2	95.25	114.3	142.88	171.45	190.5	238.13
S (mm/s)	3.18	6.35	9.53	12.7	19.05	25.4	31.75	38.1	50.8	63.5	76.2	95.25	114.3	127	158.75
R (mm/s)	2.54	5.08	7.62	10.16	15.24	20.32	25.4	30.48	40.64	50.8	60.96	76.2	91.44	101.6	127
Speed r/min	30	60	90	120	180	240	300	360	480	600	720	900	1080	1200	1500
Pulse pps	100	200	300	400	600	800	1000	1200	1600	2000	2400	3000	3600	4000	5000

Size 23 Double Stack Speed Thrust Curves

※Bipolar chopper constant current drive, operating current 2.5A (RMS), screw diameter 10&12&12.7mm (Recommended Load Limit 92.5kg)

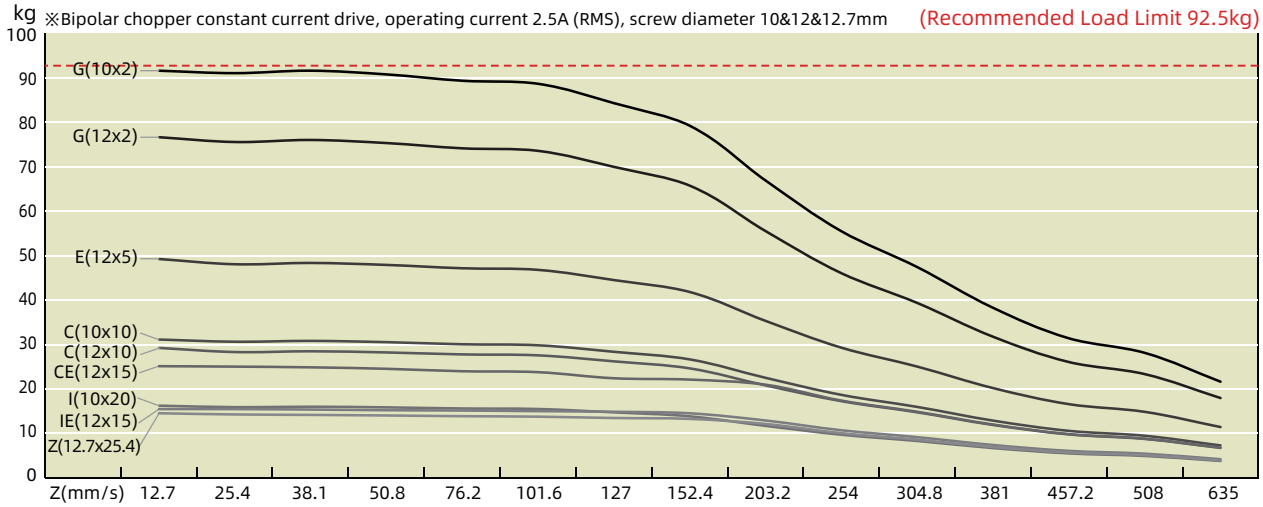

Z(mm/s)	12.7	25.4	38.1	50.8	76.2	101.6	127	152.4	203.2	254	304.8	381	457.2	508	635
IE(mm/s)	12.5	25	37.5	50	75	100	125	150	200	250	300	375	450	500	625
I(mm/s)	10	20	30	40	60	80	100	120	160	200	240	300	360	400	500
CE(mm/s)	7.5	15	22.5	30	45	60	75	90	120	150	180	225	270	300	375
C(mm/s)	5	10	15	20	30	40	50	60	80	100	120	150	180	200	250
E(mm/s)	2.5	5	7.5	10	15	20	25	30	40	50	60	75	90	100	125
G(mm/s)	1	2	3	4	6	8	10	12	16	20	24	30	36	40	50
Speed r/min	30	60	90	120	180	240	300	360	480	600	720	900	1080	1200	1500
Pulse pps	100	200	300	400	600	800	1000	1200	1600	2000	2400	3000	3600	4000	5000

TEST CONDITION

Testing Voltage: 48Vdc, Driver Model: DS-OLS4-FPD bipolar, chopper driver at rated current (rms).
Motor thrust may vary depending on voltage and driver conditions. 50% thrust margin is recommended.

Size 24 (60mm) Series

Size 24 [60mm] Stepper Lead Screw Linear Actuator provides high performance, a longer working cycle, and is capable of 1050N.

Motor Characteristics

Motor	Voltage (V)	Current (A [RMS])	Resistance (Ω)	Inductance (mH)	Weight (g)	Lead Wire No.	Motor Length (mm)
24-2120	3	2	1.5	3.9	680	4	47
24-2130	1.8	3	0.6	1.6	680	4	47
24-2140	1.6	4	0.4	0.9	680	4	47
24-2230	3	3	1	3.4	1080	4	68.3
24-2240	2.4	4	0.6	1.9	1080	4	68.3
24-2250	1.5	5	0.3	1.2	1080	4	68.3

Note : Motor Insulation Class B, Motor Temperature Rise 80°C, Ambient Temperature -20°C~55°C

Available Lead Screw and Travel per Step

Screw Dia. (inch)	Screw Dia. (mm)	Lead (inch)	Lead (mm)	Lead Code	Travel Per Step @1.8° (mm)*	Travel Per Step @0.9° (mm)*
0.375	9.525	0.025	0.635	A	0.0032	0.0016
0.375	9.525	0.05	1.27	D	0.0064	0.0032
0.375	9.525	0.0625	1.5875	F	0.0079	0.004
0.375	9.525	0.083	2.1167	H	0.0106	0.0053
0.375	9.525	0.1	2.54	K	0.0127	0.0064
0.375	9.525	0.125	3.175	L	0.0159	0.0079
0.375	9.525	0.167	4.2333	P	0.0212	0.0106
0.375	9.525	0.2	5.08	R	0.0254	0.0127
0.375	9.525	0.25	6.35	S	0.0318	0.0159
0.375	9.525	0.375	9.525	V	0.0476	0.0238
0.375	9.525	0.384	9.7536	W	0.0488	0.0244
0.375	9.525	0.4	10.16	X	0.0508	0.0254
0.375	9.525	0.5	12.7	Y	0.0635	0.0318
0.375 / 0.5	9.525 / 12.7	1	25.4	Z	0.127	0.0635
0.394 / 0.472	10 / 12	0.0787	2	G	0.01	0.005
0.472	12	0.1969	5	E	0.025	0.0125
0.394 / 0.472	10 / 12	0.3937	10	C	0.05	0.025
0.394	10	0.7874	20	I	0.1	0.05
0.472	12	0.5096	15	CE	0.075	0.0375
0.472	12	0.9843	25	IE	0.125	0.0625

* Motor wiring and screw lead could be customized according to customer's request

* Value Truncated

* 15.875mm diameter screw only can be applied in External Type

Size 24 (60mm) Series

Dimensional Drawings : External Actuator

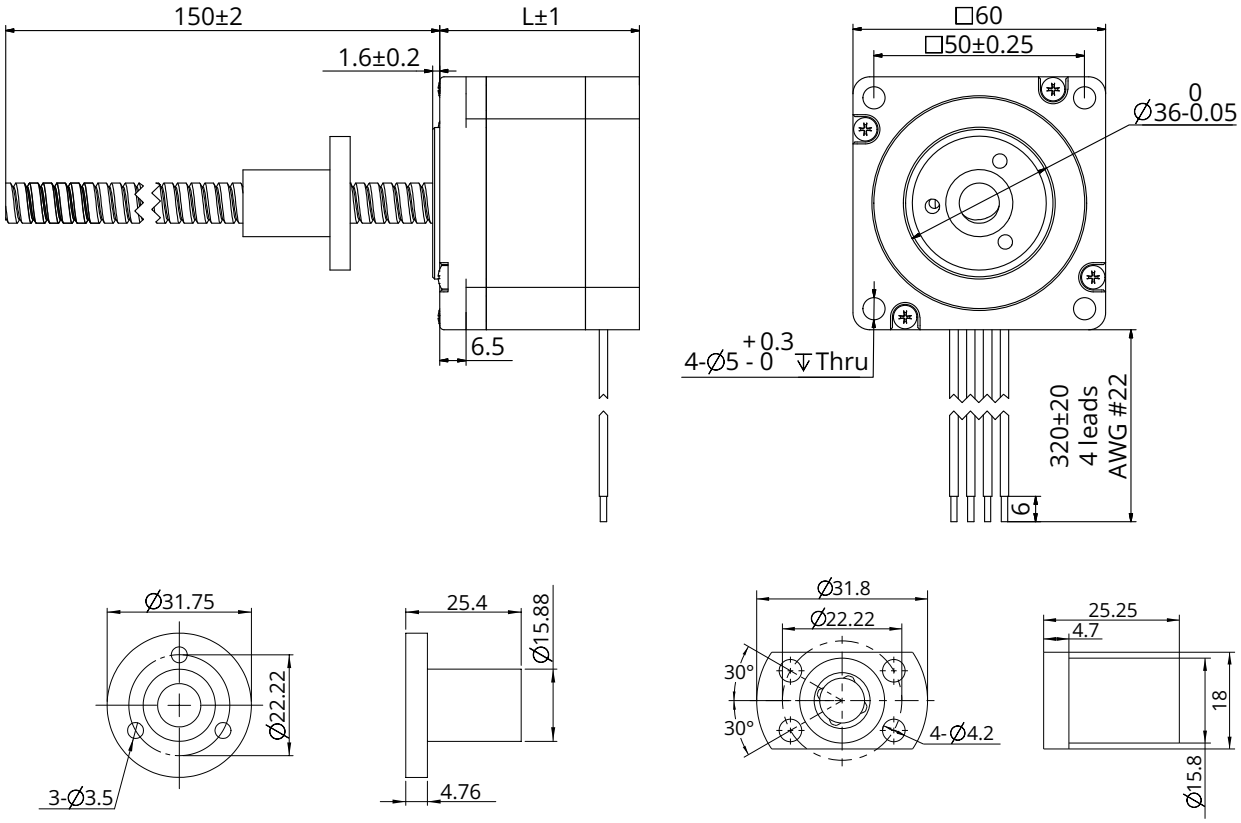

Dimensional Drawings : Non-Captive Actuator

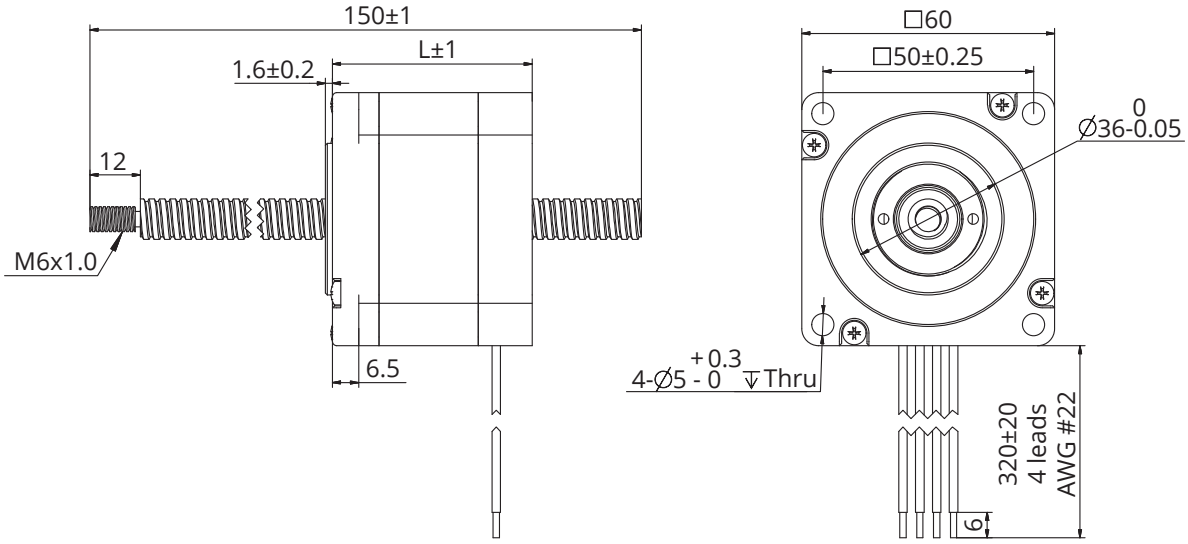

Note : All drawings are 1st-angle projection - ISO Compliant (3D models available)

Size 24 (60mm) Series

Dimensional Drawings : Electric Cylinder (Captive) Actuator

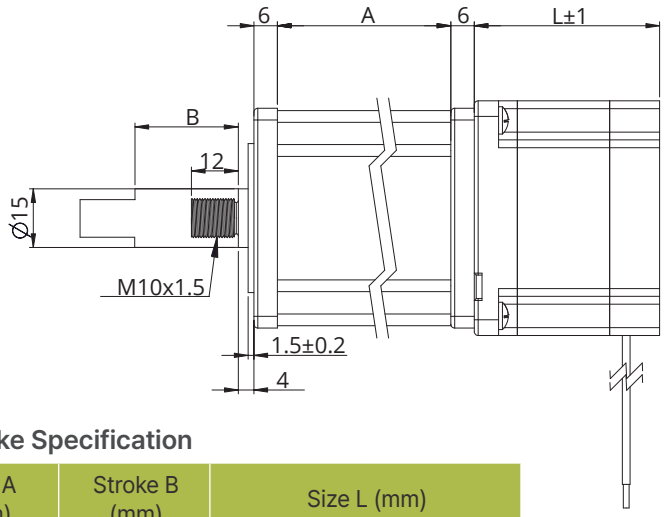

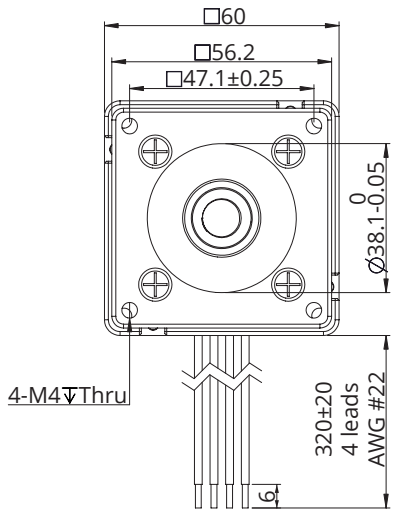

Stroke Specification

Size A (mm)	Stroke B (mm)	Size L (mm)	
45.7	12.7	Single stack motor 47mm	Double stack motor 68.3mm
52.05	19.05		
58.4	25.4		
64.8	31.8		
71.1	38.1		
83.8	50.8		
96.5	63.5		

Dimensional Drawings : Kaptive Actuator

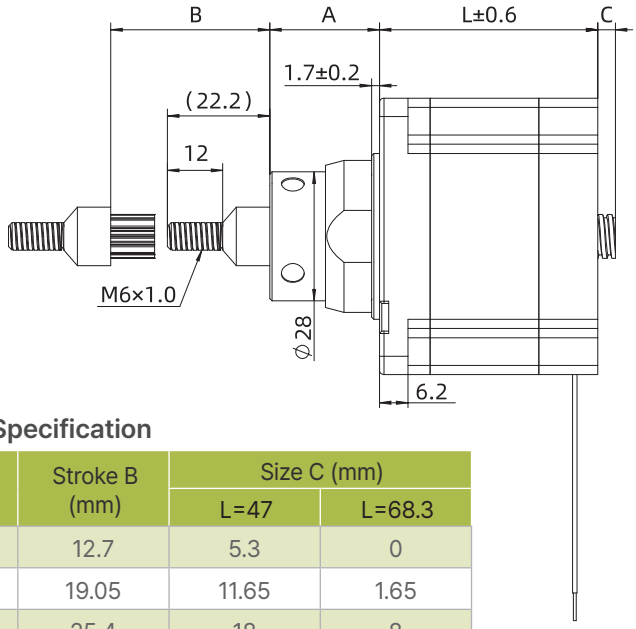

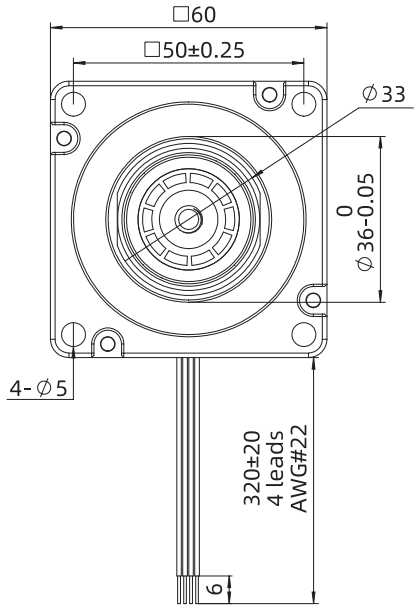

Stroke Specification

Size A (mm)	Stroke B (mm)	Size C (mm)	
		L=47	L=68.3
24.2	12.7	5.3	0
30.55	19.05	11.65	1.65
36.9	25.4	18	8
43.25	31.75	24.35	14.35
49.6	38.1	30.7	20.7
62.3	50.8	43.4	33.4
75	63.5	56.1	46.1

For customized options, please contact DINGS' or your local distributor

Size 24 (60mm) Series

Speed Thrust Curves

Size 24 Single Stack Speed Thrust Curves

※Bipolar chopper constant current drive, operating current 3A (RMS), screw diameter 9.525mm (Recommended Load Limit 92.5kg)

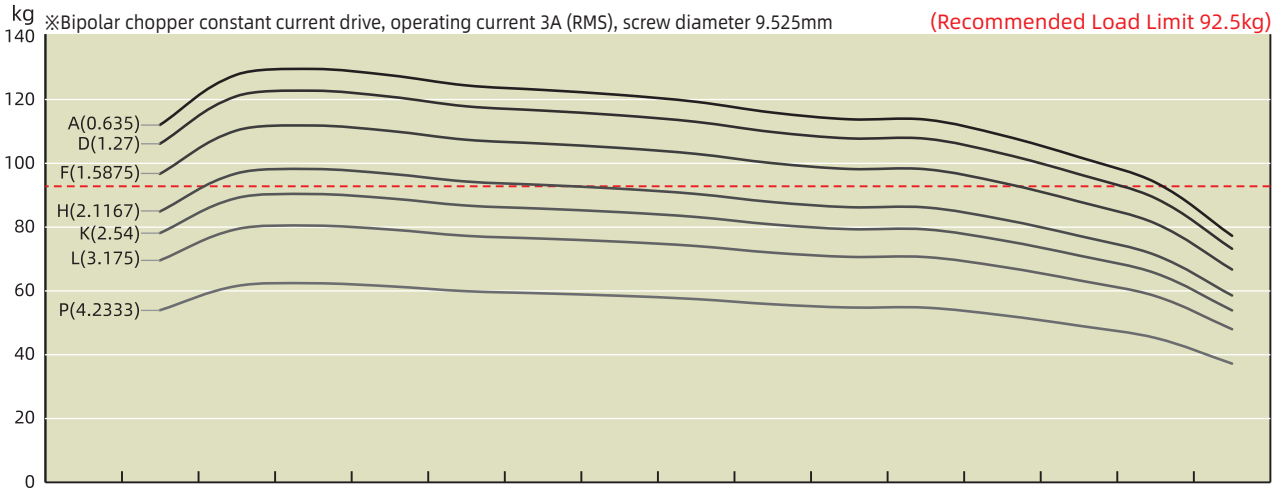

P (mm/s)	2.12	4.23	6.35	8.47	12.7	16.93	21.17	25.4	33.87	42.33	50.8	63.5	76.2	84.66	105.83
L (mm/s)	1.59	3.18	4.76	6.35	9.53	12.7	15.88	19.05	25.4	31.75	38.1	47.63	57.15	63.5	79.38
K (mm/s)	1.27	2.54	3.81	5.08	7.62	10.16	12.7	15.24	20.32	25.4	30.48	38.1	45.72	50.8	63.5
H (mm/s)	1.06	2.12	3.18	4.23	6.35	8.47	10.58	12.7	16.93	21.17	25.4	31.75	38.1	42.33	52.92
F (mm/s)	0.79	1.59	2.38	3.18	4.76	6.35	7.94	9.53	12.7	15.88	19.05	23.81	28.58	31.75	39.69
D (mm/s)	0.64	1.27	1.91	2.54	3.81	5.08	6.35	7.62	10.16	12.7	15.24	19.05	22.86	25.4	31.75
A (mm/s)	0.32	0.64	0.95	1.27	1.91	2.54	3.18	3.81	5.08	6.35	7.62	9.53	11.43	12.7	15.88
Speed r/min	30	60	90	120	180	240	300	360	480	600	720	900	1080	1200	1500
Pulse pps	100	200	300	400	600	800	1000	1200	1600	2000	2400	3000	3600	4000	5000

Size 24 Single Stack Speed Thrust Curves

※Bipolar chopper constant current drive, operating current 3A (RMS), screw diameter 9.525mm (Recommended Load Limit 92.5kg)

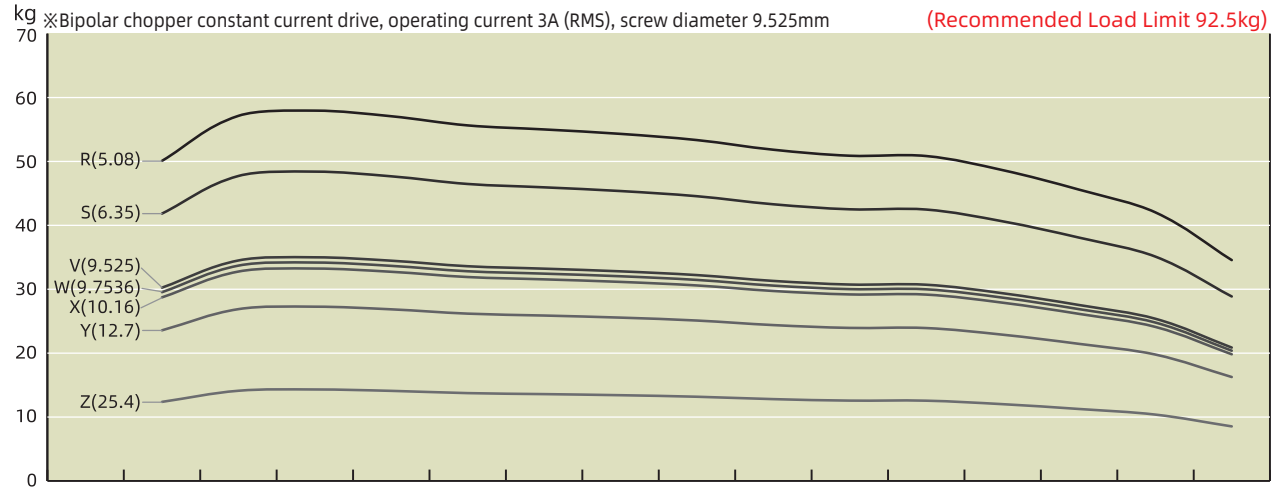

Z (mm/s)	12.7	25.4	38.1	50.8	76.2	101.6	127	152.4	203.2	254	304.8	381	457.2	508	635
Y (mm/s)	6.35	12.7	19.05	25.4	38.1	50.8	63.5	76.2	101.6	127	152.4	190.5	228.6	254	317.5
X (mm/s)	5.08	10.16	15.24	20.32	30.48	40.64	50.8	60.96	81.28	101.6	121.92	152.4	182.88	203.2	254
W (mm/s)	4.88	9.75	14.63	19.51	29.26	39.01	48.77	58.52	78.03	97.54	117.04	146.3	175.56	195.07	243.84
V (mm/s)	4.76	9.53	14.29	19.05	28.58	38.1	47.63	57.15	76.2	95.25	114.3	142.88	171.45	190.5	238.13
S (mm/s)	3.18	6.35	9.53	12.7	19.05	25.4	31.75	38.1	50.8	63.5	76.2	95.25	114.3	127	158.75
R (mm/s)	2.54	5.08	7.62	10.16	15.24	20.32	25.4	30.48	40.64	50.8	60.96	76.2	91.44	101.6	127
Speed r/min	30	60	90	120	180	240	300	360	480	600	720	900	1080	1200	1500
Pulse pps	100	200	300	400	600	800	1000	1200	1600	2000	2400	3000	3600	4000	5000

TEST CONDITION

Testing Voltage: 48Vdc, Driver Model: DS-OLS4-FPD bipolar, chopper driver at rated current (rms).
Motor thrust may vary depending on voltage and driver conditions. 50% thrust margin is recommended.

Size 24 (60mm) Series

Size 24 Single Stack Speed Thrust Curves

※Bipolar chopper constant current drive, operating current 3A (RMS), screw diameter 10&12mm (Recommended Load Limit 92.5kg)

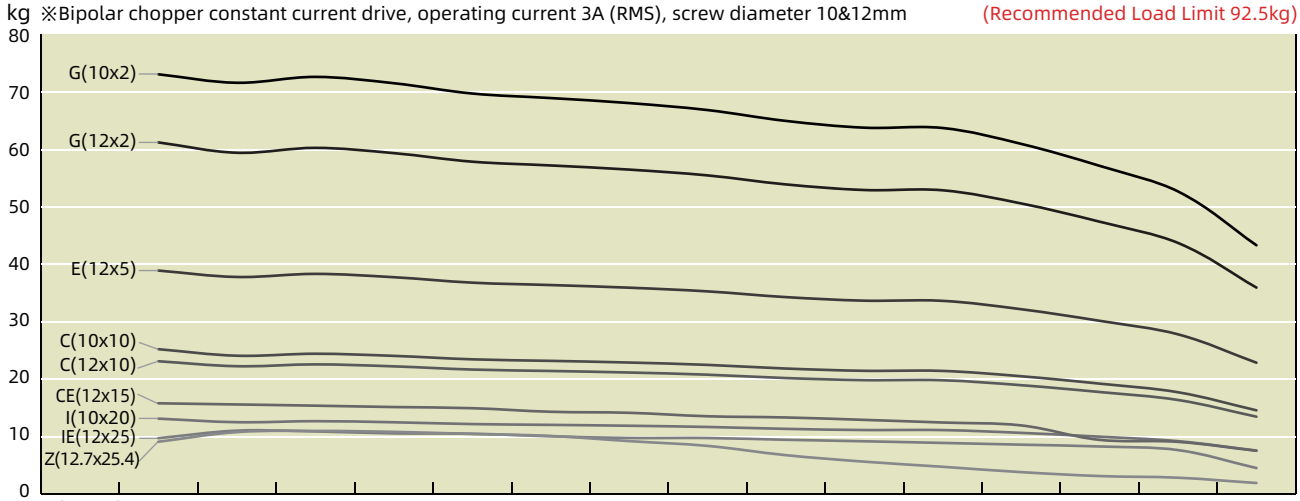

Z(mm/s)	12.7	25.4	38.1	50.8	76.2	101.6	127	152.4	203.2	254	304.8	381	457.2	508	635
IE(mm/s)	12.5	25	37.5	50	75	100	125	150	200	250	300	375	450	500	625
I(mm/s)	10	20	30	40	60	80	100	120	160	200	240	300	360	400	500
CE(mm/s)	7.5	15	22.5	30	45	60	75	90	120	150	180	225	270	300	375
C(mm/s)	5	10	15	20	30	40	50	60	80	100	120	150	180	200	250
E(mm/s)	2.5	5	7.5	10	15	20	25	30	40	50	60	75	90	100	125
G(mm/s)	1	2	3	4	6	8	10	12	16	20	24	30	36	40	50
Speed r/min	30	60	90	120	180	240	300	360	480	600	720	900	1080	1200	1500
Pulse pps	100	200	300	400	600	800	1000	1200	1600	2000	2400	3000	3600	4000	5000

Size 24 Double Stack Speed Thrust Curves

※Bipolar chopper constant current drive, operating current 4A (RMS), screw diameter 9.525mm (Recommended Load Limit 92.5kg)

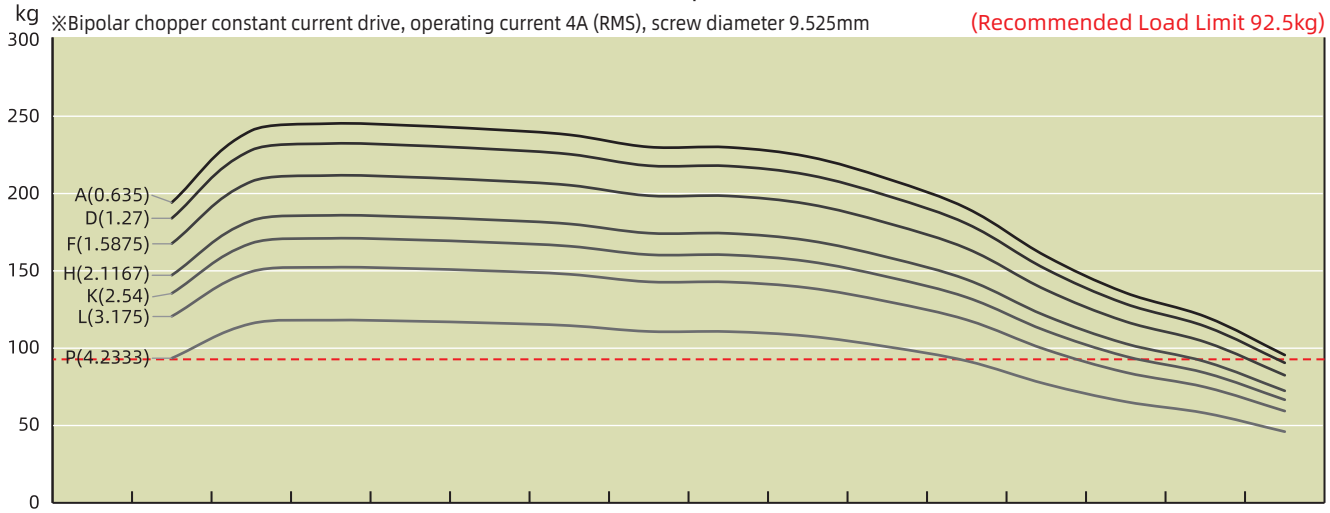

P (mm/s)	2.12	4.23	6.35	8.47	12.7	16.93	21.17	25.4	33.87	42.33	50.8	63.5	76.2	84.66	105.83
L (mm/s)	1.59	3.18	4.76	6.35	9.53	12.7	15.88	19.05	25.4	31.75	38.1	47.63	57.15	63.5	79.38
K (mm/s)	1.27	2.54	3.81	5.08	7.62	10.16	12.7	15.24	20.32	25.4	30.48	38.1	45.72	50.8	63.5
H (mm/s)	1.06	2.12	3.18	4.23	6.35	8.47	10.58	12.7	16.93	21.17	25.4	31.75	38.1	42.33	52.92
F (mm/s)	0.79	1.59	2.38	3.18	4.76	6.35	7.94	9.53	12.7	15.88	19.05	23.81	28.58	31.75	39.69
D (mm/s)	0.64	1.27	1.91	2.54	3.81	5.08	6.35	7.62	10.16	12.7	15.24	19.05	22.86	25.4	31.75
A (mm/s)	0.32	0.64	0.95	1.27	1.91	2.54	3.18	3.81	5.08	6.35	7.62	9.53	11.43	12.7	15.88
Speed r/min	30	60	90	120	180	240	300	360	480	600	720	900	1080	1200	1500
Pulse pps	100	200	300	400	600	800	1000	1200	1600	2000	2400	3000	3600	4000	5000

TEST CONDITION

Testing Voltage: 48Vdc, Driver Model: DS-OLS4-FPD bipolar, chopper driver at rated current (rms).
Motor thrust may vary depending on voltage and driver conditions. 50% thrust margin is recommended.

Size 24 (60mm) Series

Size 24 Double Stack Speed Thrust Curves

kg ※Bipolar chopper constant current drive, operating current 4A (RMS), screw diameter 9.525mm (Recommended Load Limit 92.5kg)

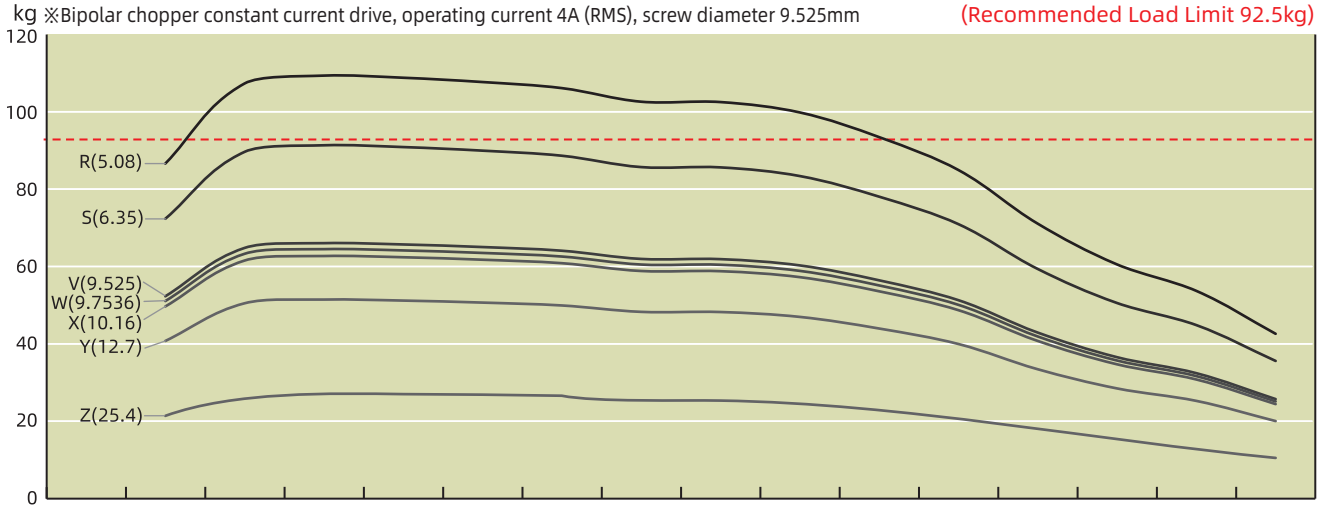

Z (mm/s)	12.7	25.4	38.1	50.8	76.2	101.6	127	152.4	203.2	254	304.8	381	457.2	508	635
Y (mm/s)	6.35	12.7	19.05	25.4	38.1	50.8	63.5	76.2	101.6	127	152.4	190.5	228.6	254	317.5
X (mm/s)	5.08	10.16	15.24	20.32	30.48	40.64	50.8	60.96	81.28	101.6	121.92	152.4	182.88	203.2	254
W (mm/s)	4.88	9.75	14.63	19.51	29.26	39.01	48.77	58.52	78.03	97.54	117.04	146.3	175.56	195.07	243.84
V (mm/s)	4.76	9.53	14.29	19.05	28.58	38.1	47.63	57.15	76.2	95.25	114.3	142.88	171.45	190.5	238.13
S (mm/s)	3.18	6.35	9.53	12.7	19.05	25.4	31.75	38.1	50.8	63.5	76.2	95.25	114.3	127	158.75
R (mm/s)	2.54	5.08	7.62	10.16	15.24	20.32	25.4	30.48	40.64	50.8	60.96	76.2	91.44	101.6	127
Speed r/min	30	60	90	120	180	240	300	360	480	600	720	900	1080	1200	1500
Pulse pps	100	200	300	400	600	800	1000	1200	1600	2000	2400	3000	3600	4000	5000

Size 24 Double Stack Speed Thrust Curves

kg ※Bipolar chopper constant current drive, operating current 4A (RMS), screw diameter 10&12mm (Recommended Load Limit 92.5kg)

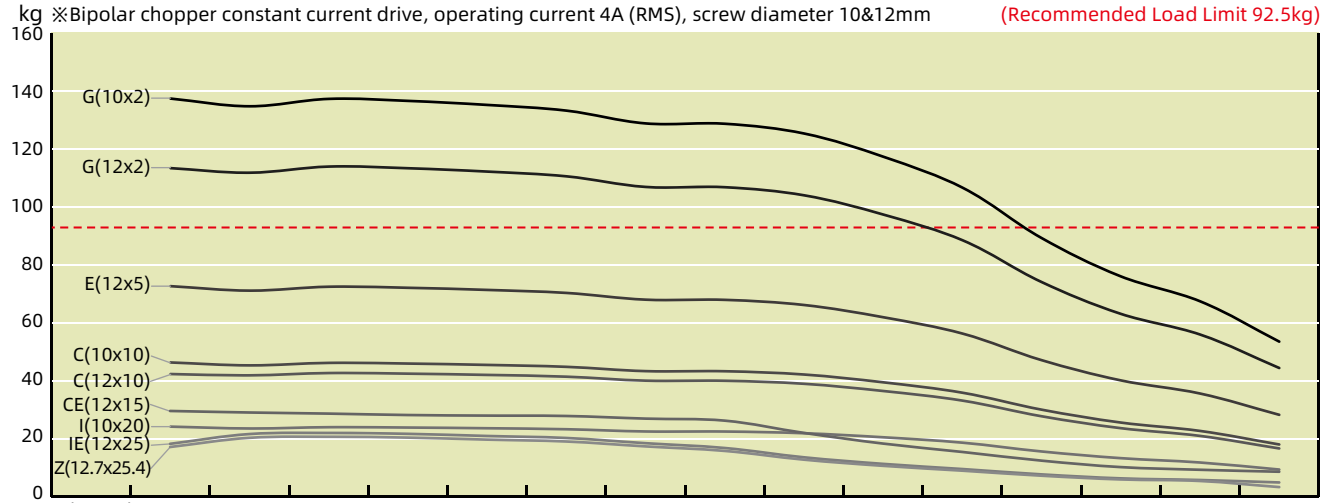

Z(mm/s)	12.7	25.4	38.1	50.8	76.2	101.6	127	152.4	203.2	254	304.8	381	457.2	508	635
IE(mm/s)	12.5	25	37.5	50	75	100	125	150	200	250	300	375	450	500	625
I(mm/s)	10	20	30	40	60	80	100	120	160	200	240	300	360	400	500
CE(mm/s)	7.5	15	22.5	30	45	60	75	90	120	150	180	225	270	300	375
C(mm/s)	5	10	15	20	30	40	50	60	80	100	120	150	180	200	250
E(mm/s)	2.5	5	7.5	10	15	20	25	30	40	50	60	75	90	100	125
G(mm/s)	1	2	3	4	6	8	10	12	16	20	24	30	36	40	50
Speed r/min	30	60	90	120	180	240	300	360	480	600	720	900	1080	1200	1500
Pulse pps	100	200	300	400	600	800	1000	1200	1600	2000	2400	3000	3600	4000	5000

TEST CONDITION

Testing Voltage: 48Vdc, Driver Model: DS-OLS4-FPD bipolar, chopper driver at rated current (rms).
Motor thrust may vary depending on voltage and driver conditions. 50% thrust margin is recommended.

Size 34 (86mm) Series

Size 34 [86mm] Stepper Lead Screw Linear Actuator is our biggest in size, and can provide up to 2270N of continuous thrust.

Motor Characteristics

Motor	Voltage (V)	Current (A [RMS])	Resistance (Ω)	Inductance (mH)	Weight (g)	Lead Wire No.	Motor Length (mm)
34-2113	12	1.3	9.2	71	2370	4	76
34-2130	5.7	3	1.9	15	2370	4	76
34-2155	2.85	5.5	0.52	4.5	2370	4	76

Note : Motor Insulation Class B, Motor Temperature Rise 80°C, Ambient Temperature -20°C~55°C

Available Lead Screw and Travel per Step

Screw Dia. (inch)	Screw Dia. (mm)	Lead (inch)	Lead (mm)	Lead Code	Travel Per Step @1.8° (mm)*
0.625	15.875	0.1	2.54	K	0.0127
0.625	15.875	0.125	3.175	L	0.0159
0.625	15.875	0.2	5.08	R	0.0254
0.625	15.875	0.25	6.35	S	0.0318
0.625	15.875	0.5	12.7	Y	0.0635
0.625	15.875	1	25.4	Z	0.127

* Motor wiring and screw lead could be customized according to customer's request

* Value Truncated

Dimensional Drawings : External Actuator

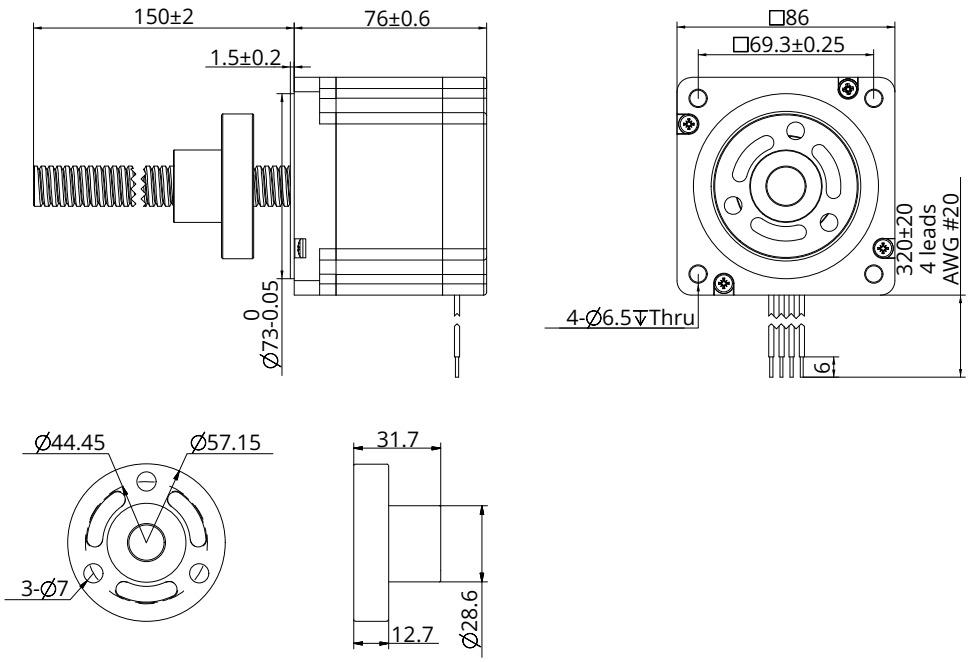

Note : All drawings are 1st-angle projection - ISO Compliant (3D models available)

Size 34 (86mm) Series

Dimensional Drawings : Non-Captive Actuator

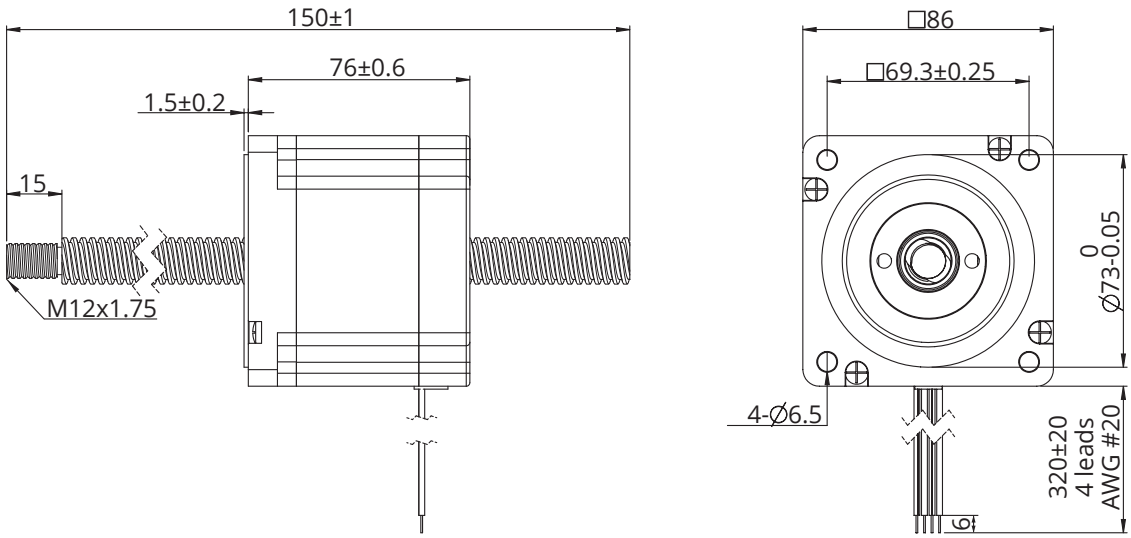

Speed Thrust Curves

Size 34 Single Stack Speed Thrust Curves

※Bipolar chopper constant current drive operating current 5.5A (RMS)

(Recommended Load Limit 231kg)

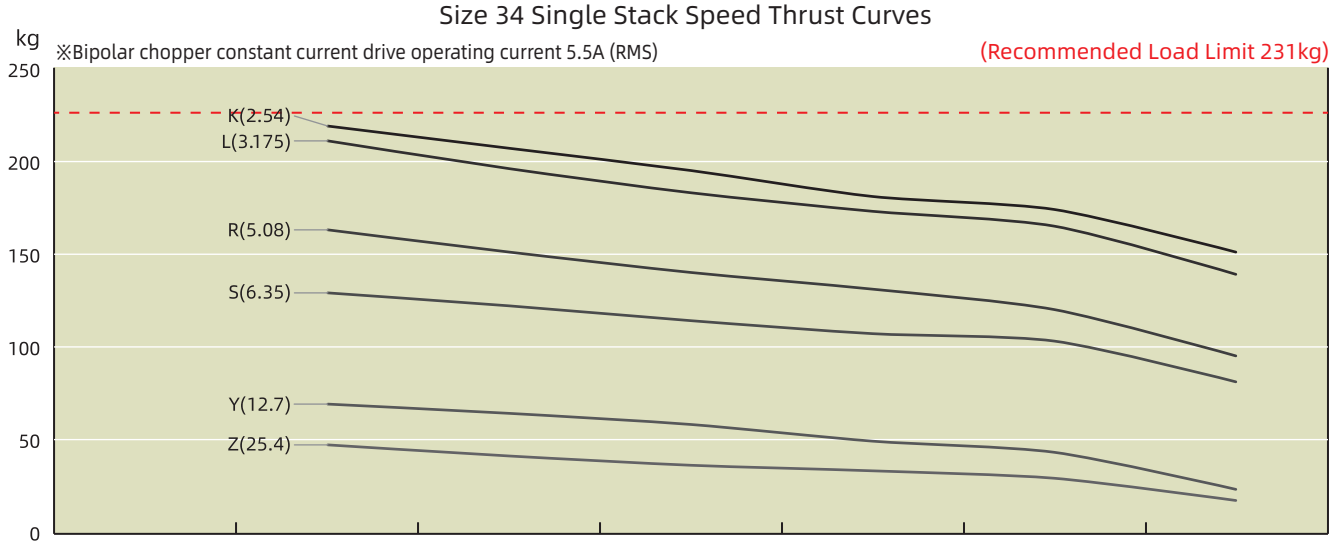

Z (mm/s)	25.4	76.2	101.6	127	152.4	190.5
Y (mm/s)	12.7	38.1	50.8	63.5	76.2	95.3
S (mm/s)	6.4	19.1	25.4	31.8	38.1	47.6
R (mm/s)	5.1	15.2	20.3	25.4	30.5	38.1
L (mm/s)	3.2	9.5	12.7	15.9	19.1	23.8
K (mm/s)	2.5	7.6	10.2	12.7	15.2	19.1
Speed r/min	60	180	240	300	360	450
Pulse pps	200	600	800	1000	1200	1500

TEST CONDITION

Testing Voltage: 48Vdc, Driver Model: DS-OLS8-FPD bipolar, chopper driver at rated current (rms).
Motor thrust may vary depending on voltage and driver conditions. 50% thrust margin is recommended.

Accessories and Options

Screw End Machining

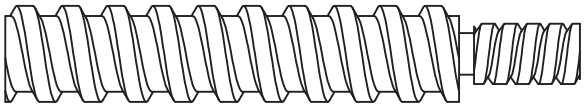	Threaded End	Screw end machining depends on screw diameter. For customized screw end machining are available, please contact DINGS' representatives for more details.
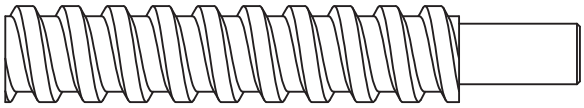	Smooth End	
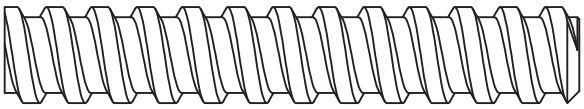	None	
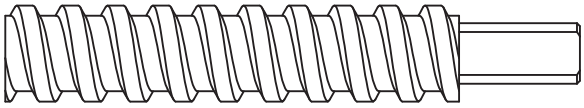	Customized	

Accessories and Options

External Actuator Anti-Backlash Nut

Torsion Spring Anti-Backlasn Nut

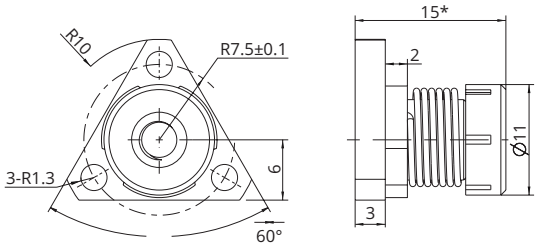

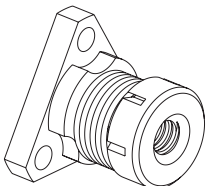

Size 8 (20mm) & Size 11 (28mm)

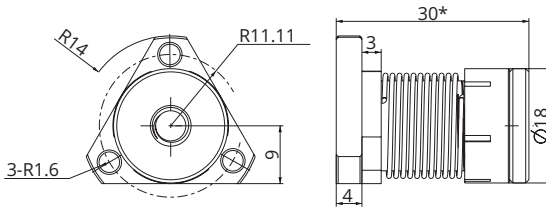

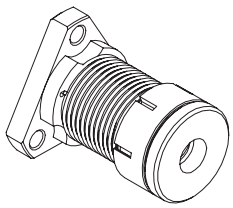

Size 14 (35mm) & Size 17 (42mm)

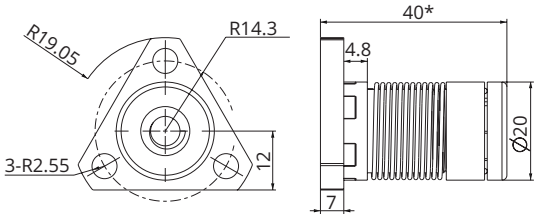

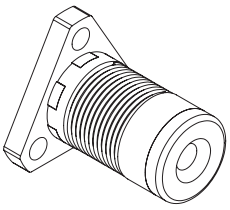

Size 23 (57mm)

Compression Spring Anti-Backlasn Nut

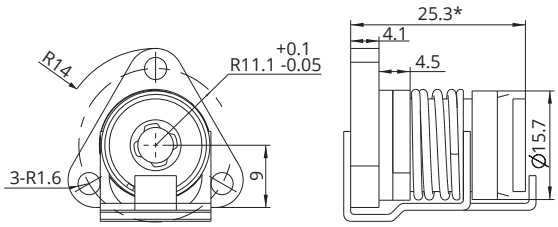

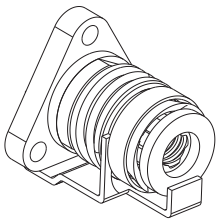

Size 14 (35mm) & Size 17 (42mm)

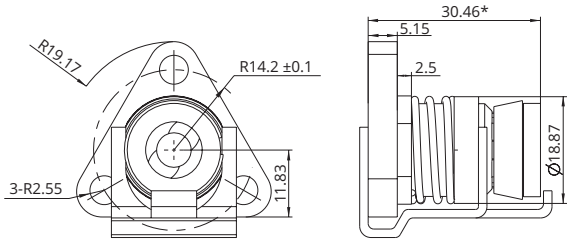

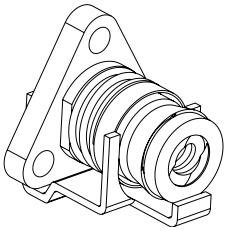

Size 23 (57mm)

* According to different screw lead code selection, length of Anti-Backlash nut can be changed

Accessories and Options

Non-Captive Actuator Anti-Backlash Nut

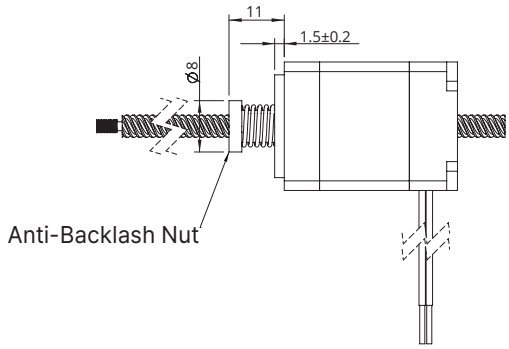

Size 8 (20mm)

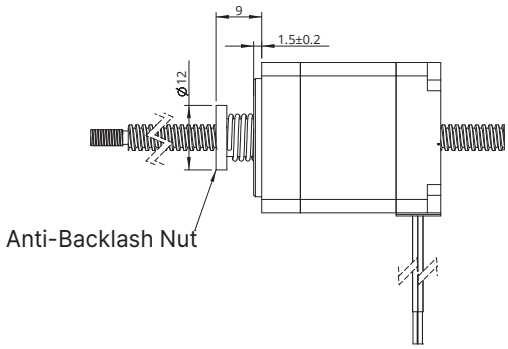

Size 11 (28mm)

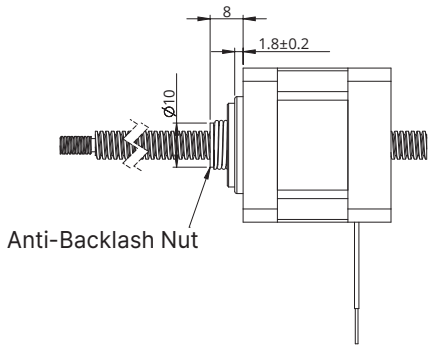

Size 14 (35mm)

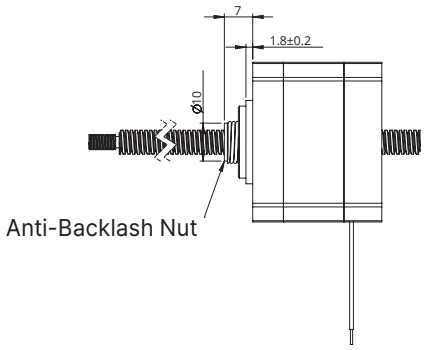

Size 17 (42mm)

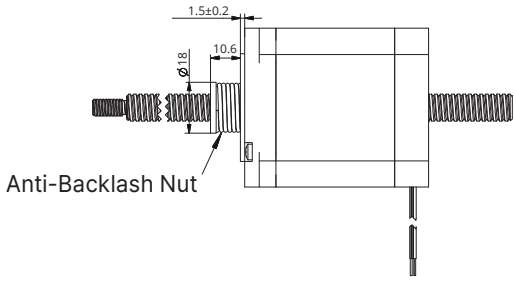

Size 23 (57mm)

Customized Nut

Accessories and Options

Encoder

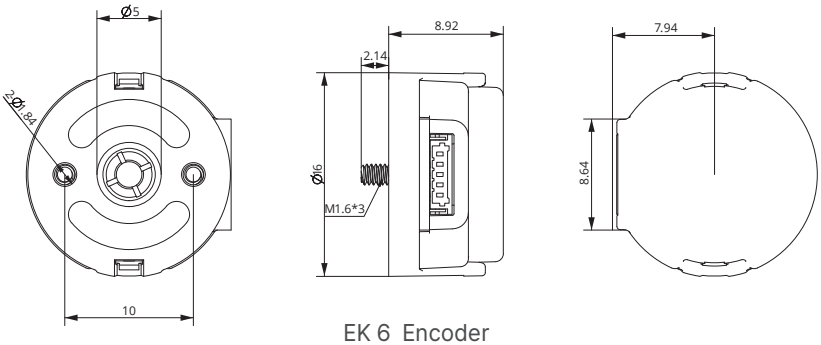

EK 6 Encoder

- **EK 6 Encoder (Used for size 6 motors) * No Index**

Resolution (CPR)	250	256	500	512	1000	1024	2000	2048	4000	4096
Single ended output	0	1	2	3	4	5	6	7	8	9

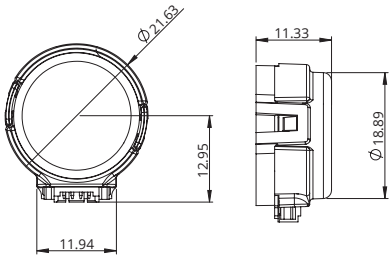

EK 1 Encoder - single ended output

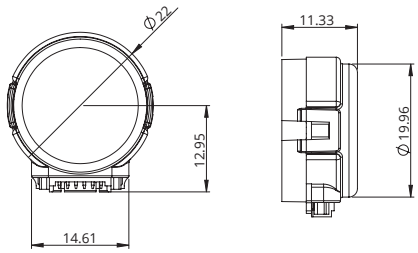

EK 1 Encoder - differential output

- **EK 1 Encoder (Used for size 8, 11, 14, 17 motors) * No Index**

Resolution (CPR)	100	108	120	125	128	200	250	256	300	360	400	500	1000	512	720	800
Single ended output	0	1	2	3	4	5	6	7	8	9	10	11	12	13	14	15
Differential output	A	B	C	D	E	F	G	H	I	J	K	L	M	N	O	P

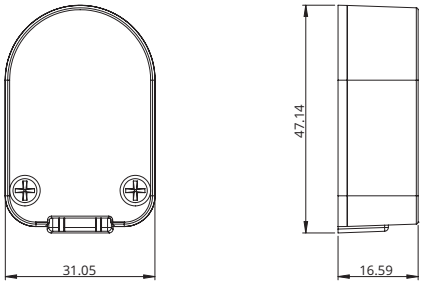

EK 2 Encoder - single ended output

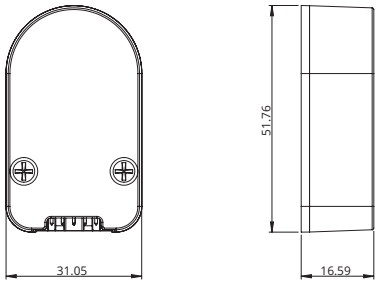

EK 2 Encoder - differential output

- **EK 2 Encoder (Used for size 14, 17, 23, 24 motors)**

Resolution (CPR)	50	100	192	200	250	256	360	400	500	720	900	1000	1250	2000	2500	4000	5000
Single ended output	0	1	2	3	4	5	6	7	8	9	10	11	12				
Differential output	A	B	C	D	E	F	G	H	I	J	K	L	M	N	O	P	Q

Accessories and Options

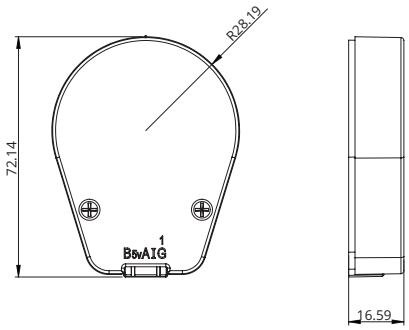

EK 3 Encoder - single ended output

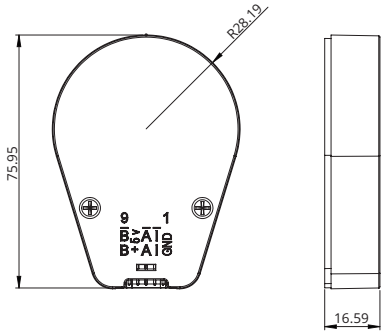

EK 3 Encoder - differential output

- **EK 3 Encoder (Used for size 23, 24, 34 motors)**

Resolution (CPR)	64	100	200	500	1000	1800	2000	2500	3600	4000	5000	7200	8000	10000
Single ended output	0	1	2	3	4	5	6	7	8					
Differential output		A	B	C	D	E	F	G	H	I	J	K	L	M

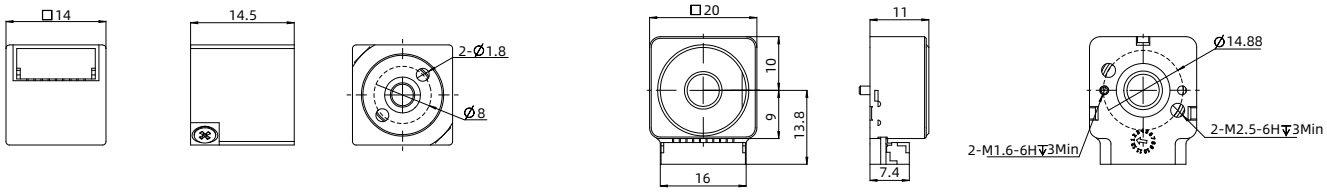

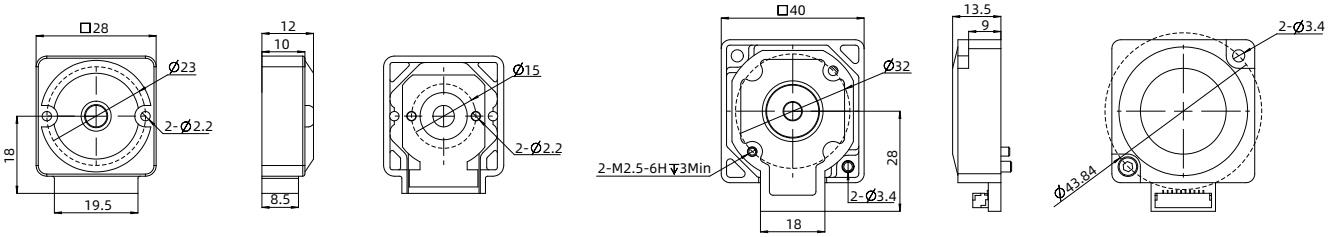

- **EK 7 Encoder (Used for size 6, 8, 11, 14, 17, 23, 24 External, Non-Captive motors)**

Resolution (CPR)	-	-	-	1000	-	-	2000	-	-	-
Single ended output	0	1	2	3	4	5	6	7	8	9
Differential output	A	B	C	D	E	F	G	H	I	J

Manual Knob

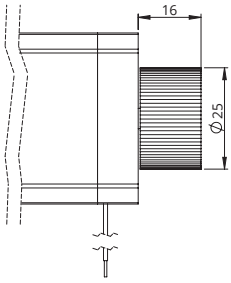

Accessories and Options

Power OFF Brake

Parameter

Series	8 (20mm)	11 (28mm)	14 (35mm)	17 (42mm)	23 (57mm)	24 (60mm)	34 (86mm)
Rated voltage	DC 24V±5%						
Resistance	55Ω±10%	143.7Ω±10%	217Ω±10%	145Ω±10%	141Ω±10%	141Ω±10%	69Ω±10%
Power	9.6W	5.5W	4W	5W	5W	5W	12W
Hold torque	>0.06N.M	>0.3N.M	>0.3N.M	>0.8N.M	>2N.m	>2N.m	>6N.m
Insulation	B						
Insulation resistance	>100MΩ (DC500V)						
Dielectric strength	AC 1000V for 1 sec						
Retraction time	50ms						
Release time	50ms						
Gyration gap	1°						
Emergency brake cycle	200 cycles						
Lifetime	500,000 cycles						
Noise level	<60 dB						

Dimension

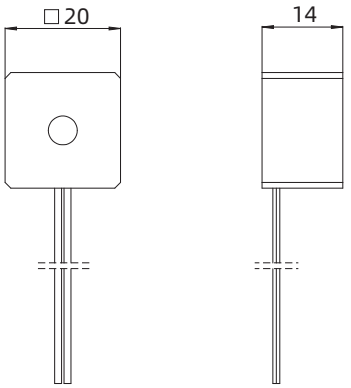

8 (20mm) Series

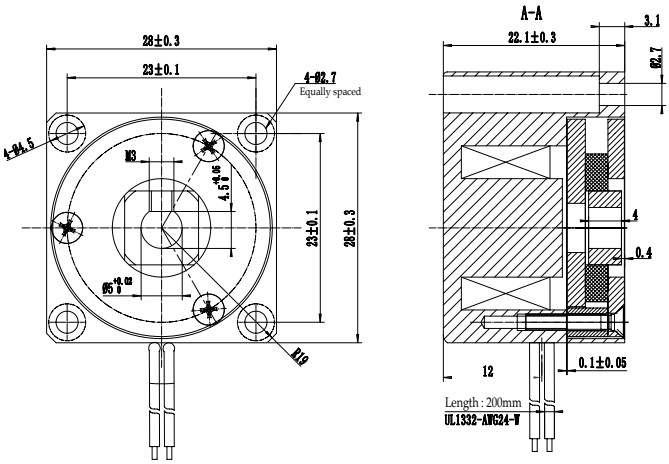

11 (28mm) Series

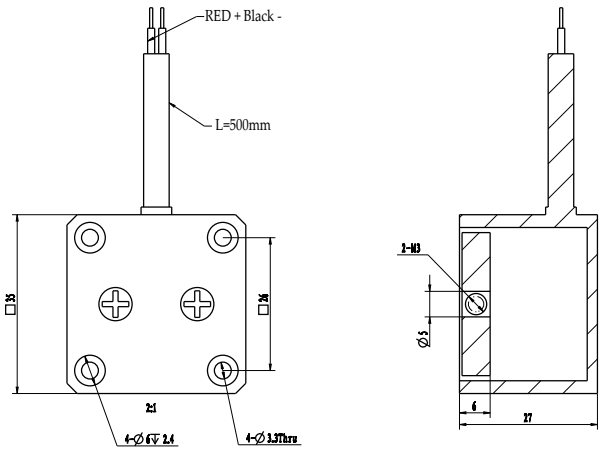

14 (35mm) Series

Accessories and Options

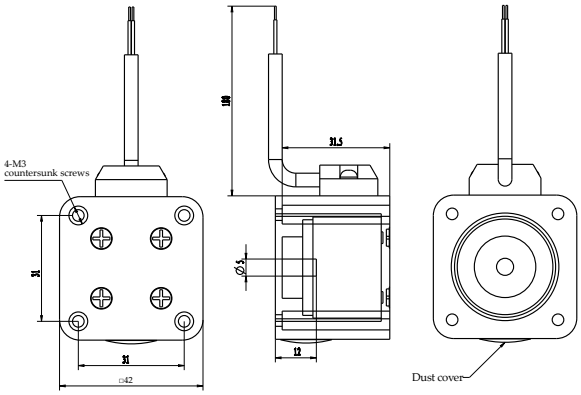

17 (42mm) Series : External

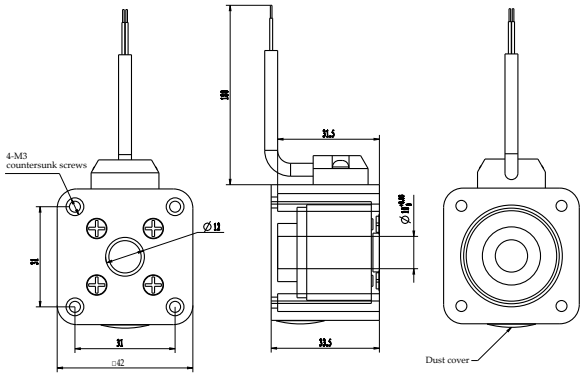

17 (42mm) Series : Non-Captive

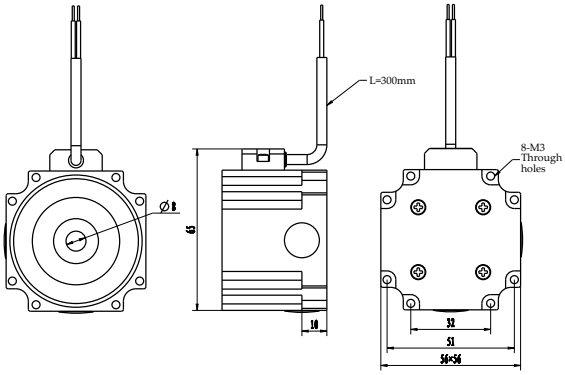

23 (57mm) Series : External

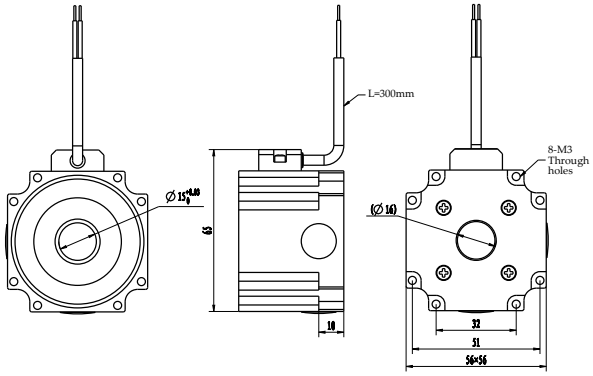

23 (57mm) Series : Non-Captive

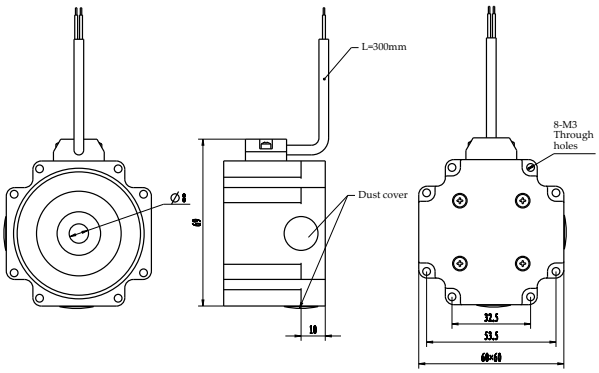

24 (60mm) Series : External

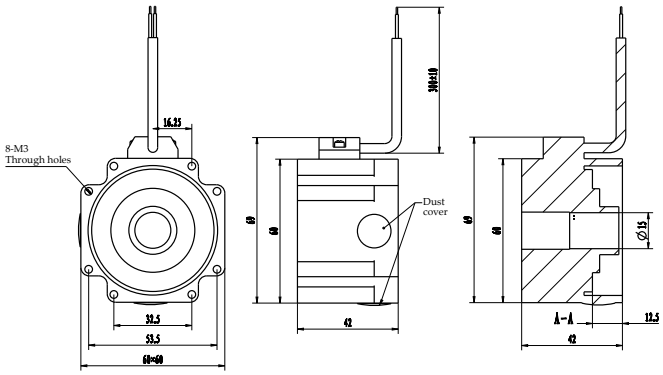

24 (60mm) Series : Non-Captive

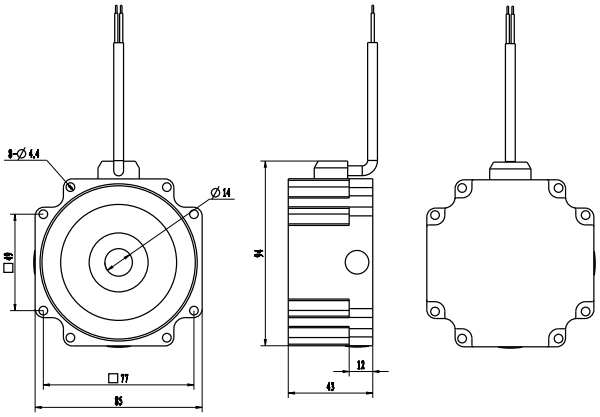

34 (86mm) Series : External

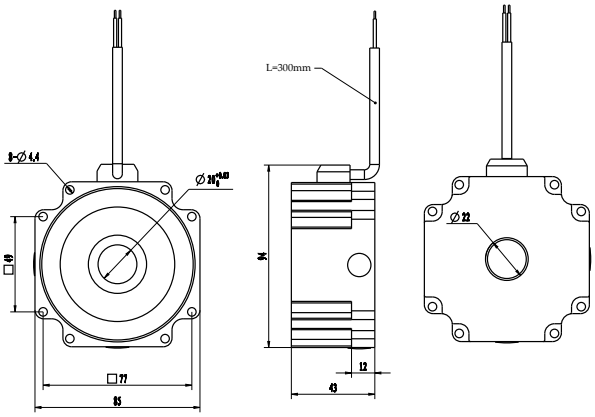

34 (86mm) Series : Non-Captive

Installation Guide

Precautions for using screw stepper motors

1. The most common installation structures

1) Linear Stepper Motor + Linear Guide

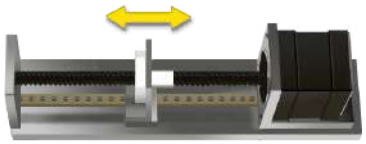

External Lead Screw Linear Actuator + Linear Guide

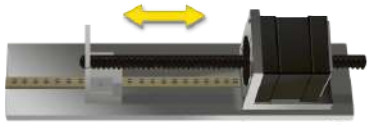

Non-captive Lead Screw Linear Actuator + Linear Guide

2) Linear Stepper Motor + Guided Rod

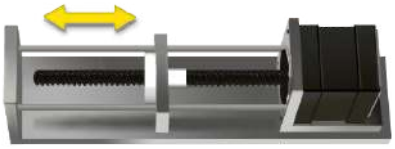

External Lead Screw Linear Actuator + Guided Rod

Non-Captive Lead Screw Linear Actuator + Guided Rod

3) Electric Cylinder (Captive) / Kaptive Lead Screw Linear Actuator Mounted to Load Directly

Electric Cylinder (Captive)

Kaptive

- **Warnings**

1. Do not dismantle the motor in any case.
2. Do not apply radial force to the screw. Do not lift, hang, push or pull the screw during usage or transport.
3. Do not add any lubrication to the nut and screw. Protect the grease from being wiped off and no other grease shall be used except those from DINGS'.
4. Measures should be taken to protect the lead screw surface from dust.
5. Do not drop the motor or screw.
6. Do not apply force or tension to the lead wire.
7. When using a chopper driver, please set the current (RMS) to the rated current of the motor. Overdriving is not recommended, as it could overheat the motor and cause the winding insulation to melt/burn.
8. Operate in ambient temperatures between -20°C to +55°C.
9. To maximize life of the system, actual load should be lower than 50% of the recommended load limit. Avoid hitting mechanical hard stops of the system.
10. Storage at room temperature with a relative humidity as lower than 75%, clean, well ventilated and free from corrosive gases.

- **Typical Electrical Connection**

1. General Drive Connection Method

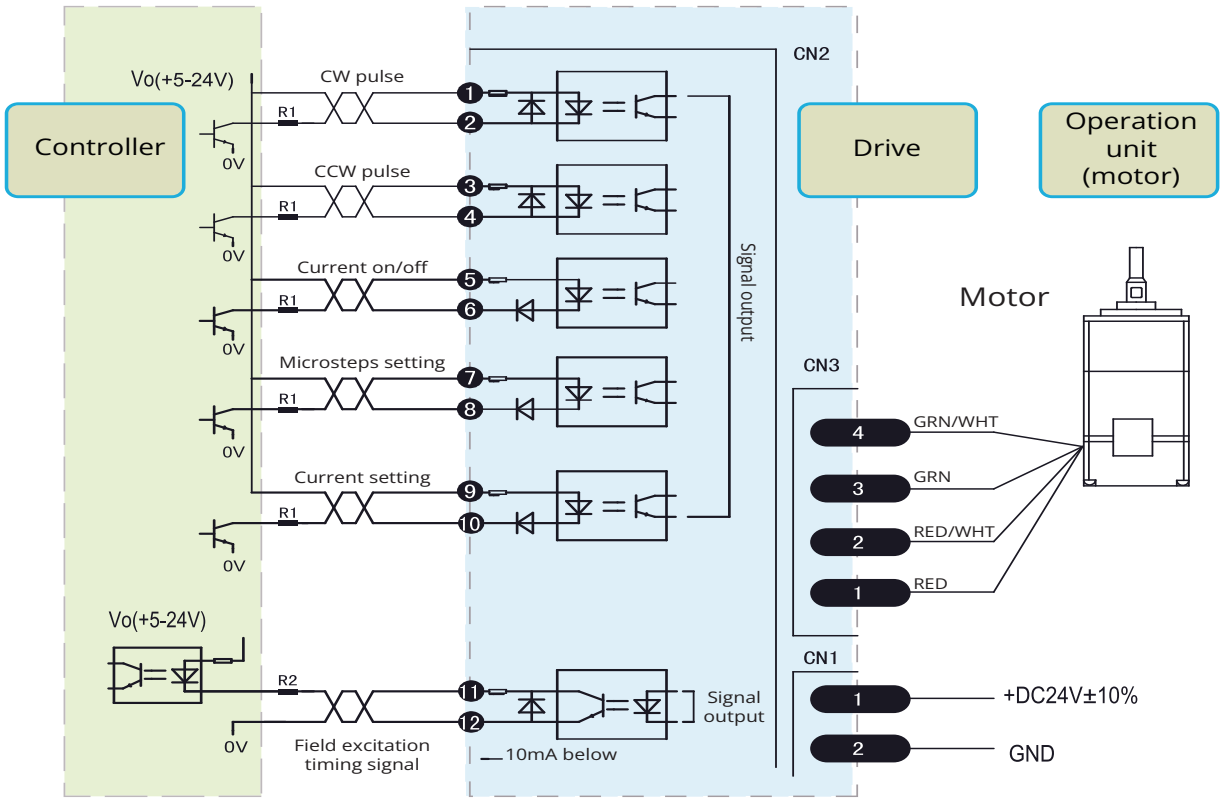

External Nut Strength

Item	Motor Size	Anti-Backlash Nut	Standard Nut	Triangle / Trimming-cut Nut	Mounting Hole Dimension	Recommended Screw Size Customer Used
		Installation Torque / Max.	Installation Torque / Max.	Installation Torque / Max.		
1	14 mm	0.8kgf.cm	1.0kgf.cm		Ø2.6/Ø3.2	M2.5 or M3 and smaller
2	20 mm	0.8kgf.cm	1.0kgf.cm		Ø2.6/Ø3.2	M2.5 or M3 and smaller
3	28 mm	0.8kgf.cm	4.0kgf.cm		Ø2.6/Ø3.2	M2.5 or M3 and smaller
4	35/42 mm	4.0kgf.cm	5.5kgf.cm	5.5kgf.cm	Ø3.2	M3 and smaller
5	57/60 mm	6.0kgf.cm	6.0kgf.cm		Ø3.5/Ø5.1	M3 or M5 and smaller
6	86 mm			18kgf.cm	Ø7.0/Ø8.0	M6 and smaller

Troubleshooting

Common Failure	Cause Analysis	Processing Methods
Motor not Running	Poor Connection	Re-connection
	Driver Alarm	Power Off and Re-boot after checking
	Actuator Stuck	Remove load, ensure actuator operates smoothly without load
	Motor winding or insulation damaged	Contact DINGS' for maintenance
Abnormal Operation After Starting Up	Resonance	Enhance microsteps to change travel speed
	Lead Screw Bend	Contact DINGS' for maintenance
	Phase Loss	Contact DINGS' for maintenance
Vibration, Noise	Low-Frequency Vibration	Adjust driver microsteps to change travel speed to avoid resonance
	Phase Loss	Contact DINGS' for maintenance
Abnormal Heating	Over Current	Regulate current value to achieve proper rating range
	Over Supply-voltage	Reduce supply-voltage
	Extended period of holding	The holding current should be halved or adjusted to smaller value
Step Loss	Overload on the Load Side	Reduce load or re-selection
	No frequency raising or lowering when programming	When motor starts, it needs to be accelerated from low to high
Insufficient Thrust	Driver Failure	Repair or replace driver
	Load is too high	Reduce load or resize actuator
	Damaged Nut	Contact DINGS' for maintenance
Lead Screw Bend or Runout at the End of Lead Screw	Damage in Transportation or Improper Installation or Improper Operation	Contact DINGS' for maintenance
Other Failures		Contact DINGS' for maintenance

Stepper Ball Screw Linear Actuator

DINGS' External Ball Screw Linear Actuators come in 6 standard sizes, from 14mm to 57mm. From 0.005mm/step to 0.1mm/step, with variety of resolution options available. Maximum thrust can reach 1600N.
Encoder options available.

Part number construction	A-60
Stepper Ball screw lead code selection	A-61
6 · 14 mm	A-62
8 · 20 mm	A-64
11 · 28 mm	A-66
14 · 35 mm	A-68
17 · 42 mm	A-71
23 · 57 mm	A-74
Accessories and options	A-77
Installation guide	A-80

Part Number Construction

17 E 2 1 10 BS2 4 - 100 R S EK2 - 001

① ② ③ ④ ⑤ ⑥ ⑦ ⑧ ⑨ ⑩ ⑪ ⑫

① Motor Size

MOTOR SIZE (mm)	14	20	28	35	42	57
MOTOR SIZE (NEMA)	6	8	11	14	17	23

② Motor Type

E = External Linear Actuator

③ Motor Step Angle

2 = 2-phase, 1.8° step angle

4 = 2-phase, 0.9° step angle

④ Motor Length

1 = Single stack

2 = Double stack

3 = Triple stack

⑤ Rated Current/Phase

XX = X.X(A) / phase

⑥ Ball Screw Code

BS2 = 2mm

⑦ Number of Lead Wires

4 = 4-wire leads

6 = 6-wire leads

⑧ Ball Screw Length

XXX = XXXmm

⑨ Thread Direction

R = Right-hand Direction

⑩ Ball Screw End Machining

M = Metric

U = UNC

S = Smooth

C = Customization

[Please provide customization requirements to DINGS']

N = None

⑪ Option

EKX = Encoder [X = Encoder Resolution]

P = Manual Knob

B = Brake

X = Rear shaft

R = Encoder Ready [Hole and Shaft]

[Please provide encoder ready requirements to DINGS']

C = Customization

[Please provide customization requirements to DINGS']

N = No rear-end machining

⑫ Customer Sequence Number

Example

Part number	17E2110BS24-100RSEK22-001
Description	Size 17 Ball screw linear actuator 2-phase, 1.8° step angle Single stack 1.0A / Phase Ball screw lead 2mm 4-wire leads Screw length:100mm Right thread direction Smooth screw end EK2 single-output encoder, 192-line resolution

Stepper Ball Screw Lead Code Selection

Stepper Ball Screw Lead Code Selection

	14/20	28	35		42	57	
Dia. / lead	Φ4	Φ6	Φ6	Φ8	Φ8	Φ10	Φ12
1.0 mm	*	*	*	*	*		
2.0 mm	*	*	*	*	*	*	*
5.0 mm				*	*		*
6.0 mm		*	*				
8.0 mm				*	*		
10.0 mm				*	*		*
20.0 mm							*

* Ball screw available for specific motor size

Size 6 (14mm) Series

Motor Characteristics

Motor	Voltage (V)	Current (A [RMS])	Resistance (Ω)	Inductance (mH)	Lead Wire No.	Motor Length (mm)
6E2103	6.6	0.25	22.0	3.6	4	32

Dimensional Drawings

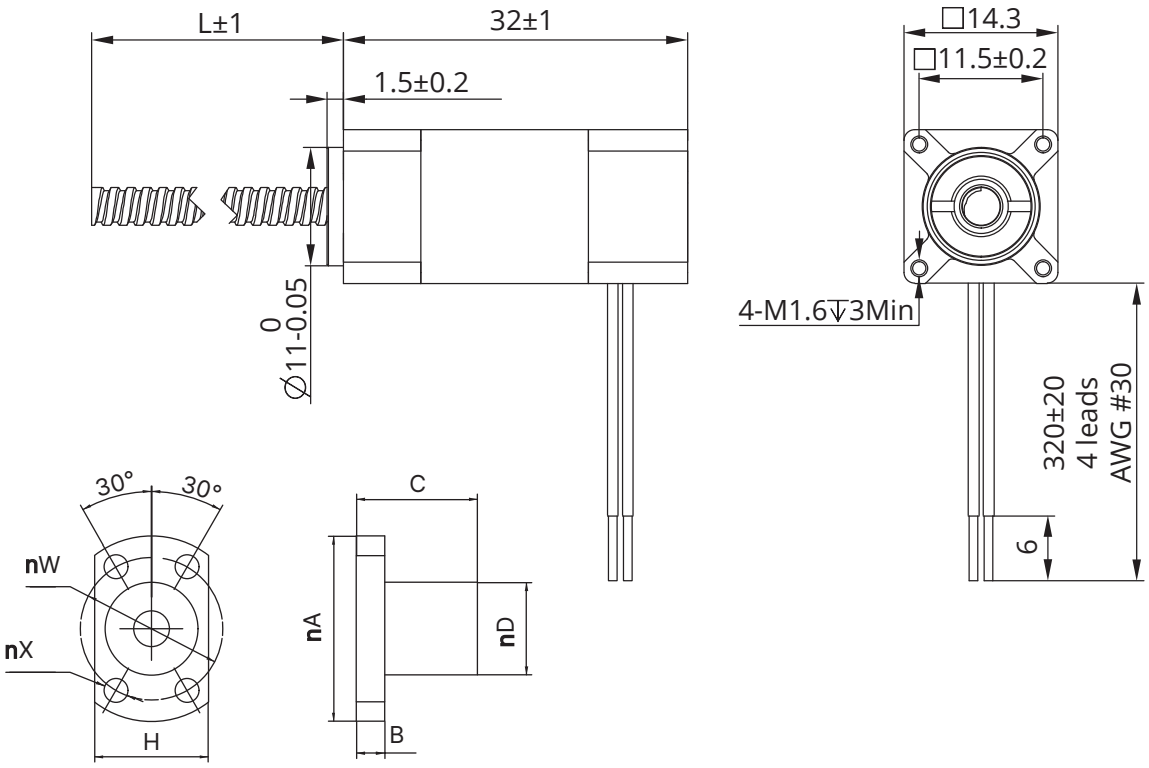

Stepper Ball Screw Specification

Ball screw type	0401	0402
Ball size	Φ0.8	Φ0.8
Number of threads	1	1
Thread direction	Right	
Shaft root dia.	Φ3.3	Φ3.3
Number of circuits	3.7×1	2.7×1
Shaft, nut material	SCM415H	
Surface hardness	HRC 58~62	
Anti-rust treatment	Anti-rust oil	
Grade	C7	

Nut Size	A	B	C	D	H	W	X	Axial play (mm)	Dynamic load (N)	Static load (N)
BS0401	19	3	13	9	13	14	2.9	≤0.02	560	790
BS0402	23	4	19	11	15	17	3.4	≤0.02	420	570

Note : All drawings are 1st-angle projection - ISO Compliant (3D models available)

Speed Thrust Curves

Size 6 Single Stack Speed Thrust Curves

N ※ Bipolar chopper constant current drive, operating current 0.3A (RMS) (Recommended Load Limit 15N)

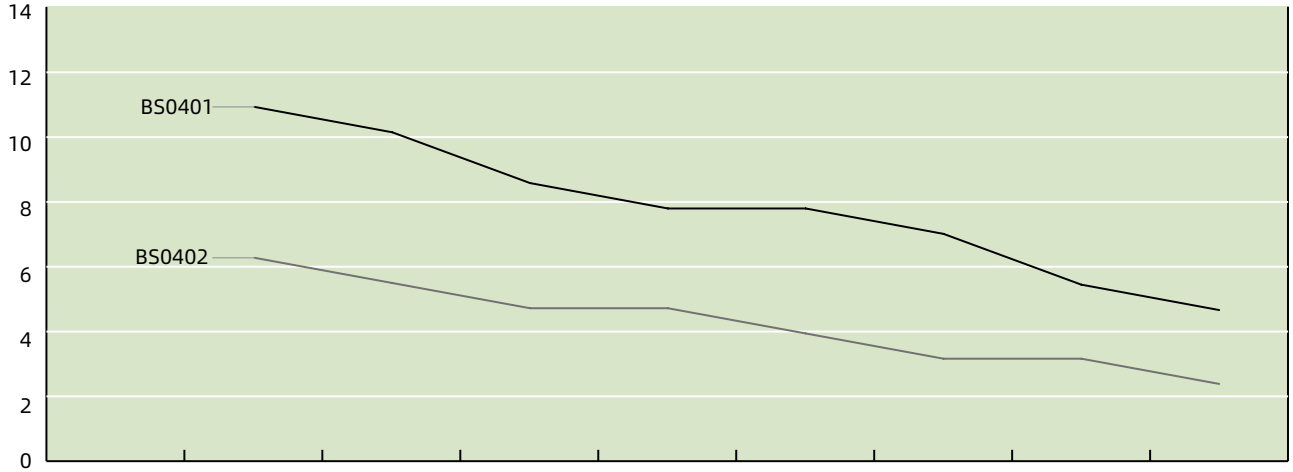

BS0402(mm/s)	2	4	5	10	20	30	40	50
BS0401(mm/s)	1	2	2.5	5	10	15	20	25
Speed r/min	60	120	150	300	600	900	1200	1500
Pulse pps	200	400	500	1000	2000	3000	4000	5000

TEST CONDITION

Testing Voltage: 12Vdc, Driver Model: DS-OLS2-FPD bipolar, chopper driver at rated current (rms).
Motor thrust may vary depending on voltage and driver conditions. 50% thrust margin is recommended.

Size 8 (20mm) Series

Motor Characteristics

Motor	Voltage (V)	Current (A [RMS])	Resistance (Ω)	Inductance (mH)	Lead Wire No.	Motor Length (mm)
8E2105	2.55	0.5	5.1	1.5	4	27.2
8E2205	4.4	0.5	8.8	2.7	4	38.1

Dimensional Drawings

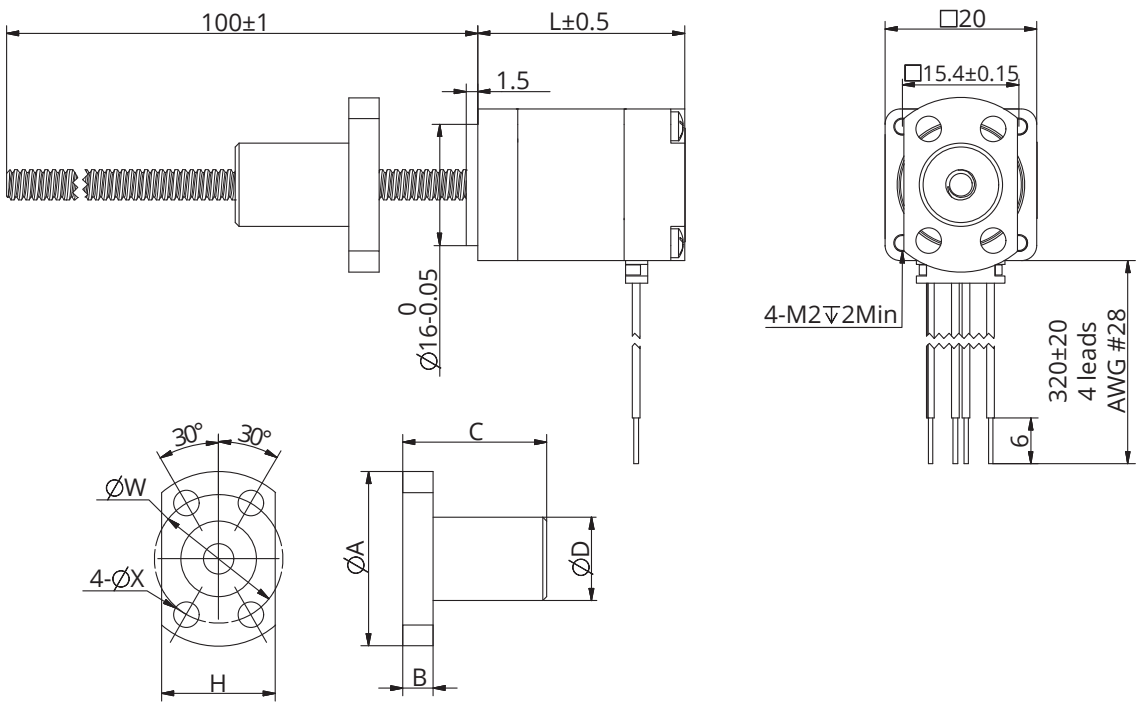

Stepper Ball Screw Specification

Ball screw type	0401	0402
Ball size	Φ0.8	Φ0.8
Number of threads	1	1
Thread direction	Right	
Shaft root dia.	Φ3.3	Φ3.3
Number of circuits	3.7×1	2.7×1
Shaft, nut material	SCM415H	
Surface hardness	HRC 58~62	
Anti-rust treatment	Anti-rust oil	
Grade	C7	

Nut Size	A	B	C	D	H	W	X	Axial play (mm)	Dynamic load (N)	Static load (N)
BS0401	19	3	13	9	13	14	2.9	≤0.02	560	790
BS0402	23	4	19	11	15	17	3.4	≤0.02	420	570

Note : All drawings are 1st-angle projection - ISO Compliant (3D models available)

Size 8 (20mm) Series

Speed Thrust Curves

Size 8 Single Stack Speed Thrust Curves

N ※ Bipolar chopper constant current drive, operating current 0.5A (RMS) (Recommended Load Limit 45N)

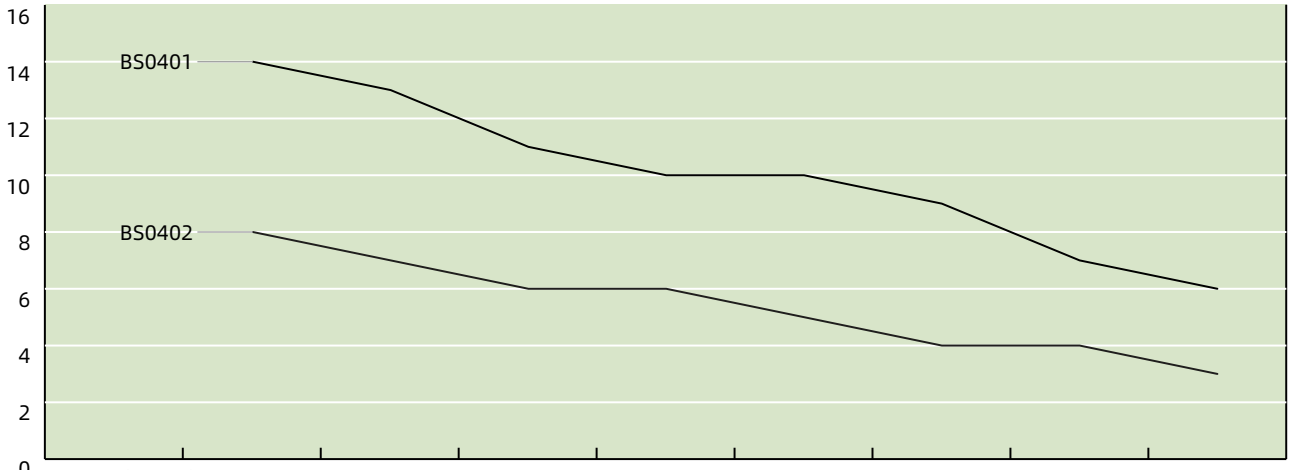

BS0402(mm/s)	2	4	5	10	20	30	40	50
BS0401(mm/s)	1	2	2.5	5	10	15	20	25
Speed r/min	60	120	150	300	600	900	1200	1500
Pulse pps	200	400	500	1000	2000	3000	4000	5000

Size 8 Double Stack Speed Thrust Curves

N ※ Bipolar chopper constant current drive, operating current 0.5A (RMS) (Recommended Load Limit 45N)

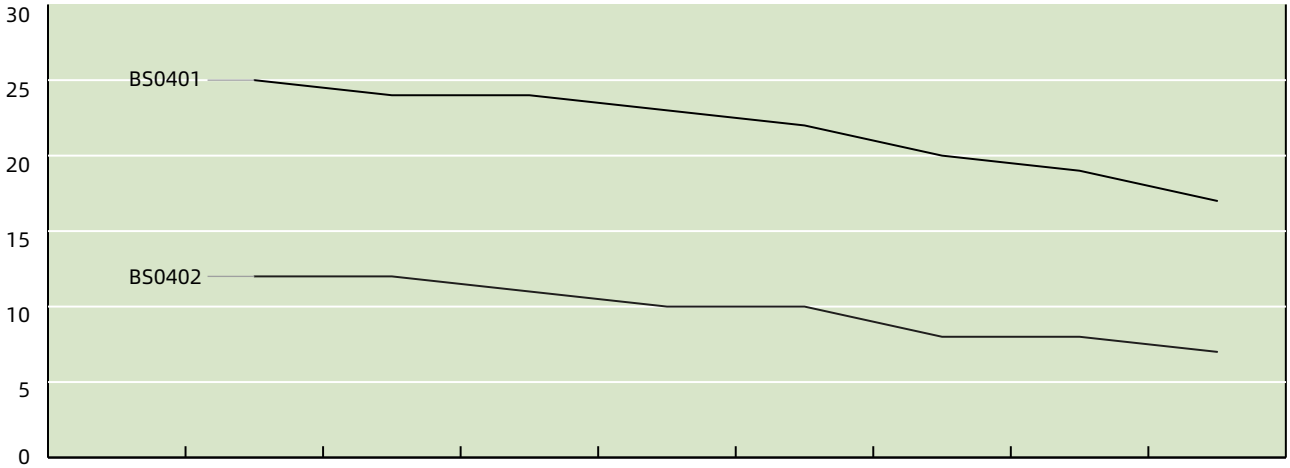

BS0402(mm/s)	2	4	5	10	20	30	40	50
BS0401(mm/s)	1	2	2.5	5	10	15	20	25
Speed r/min	60	120	150	300	600	900	1200	1500
Pulse pps	200	400	500	1000	2000	3000	4000	5000

TEST CONDITION

Testing Voltage: 24Vdc, Driver Model: DS-OLS2-FPD bipolar, chopper driver at rated current (rms).
Motor thrust may vary depending on voltage and driver conditions. 50% thrust margin is recommended.

Size 11 (28mm) Series

Motor Characteristics

Motor	Voltage (V)	Current (A [RMS])	Resistance (Ω)	Inductance (mH)	Lead Wire No.	Motor Length (mm)
11E2110	2.1	1	2.1	1.5	4	33.35
11E2209	3.9	0.95	4.1	4	4	45

Dimensional Drawings

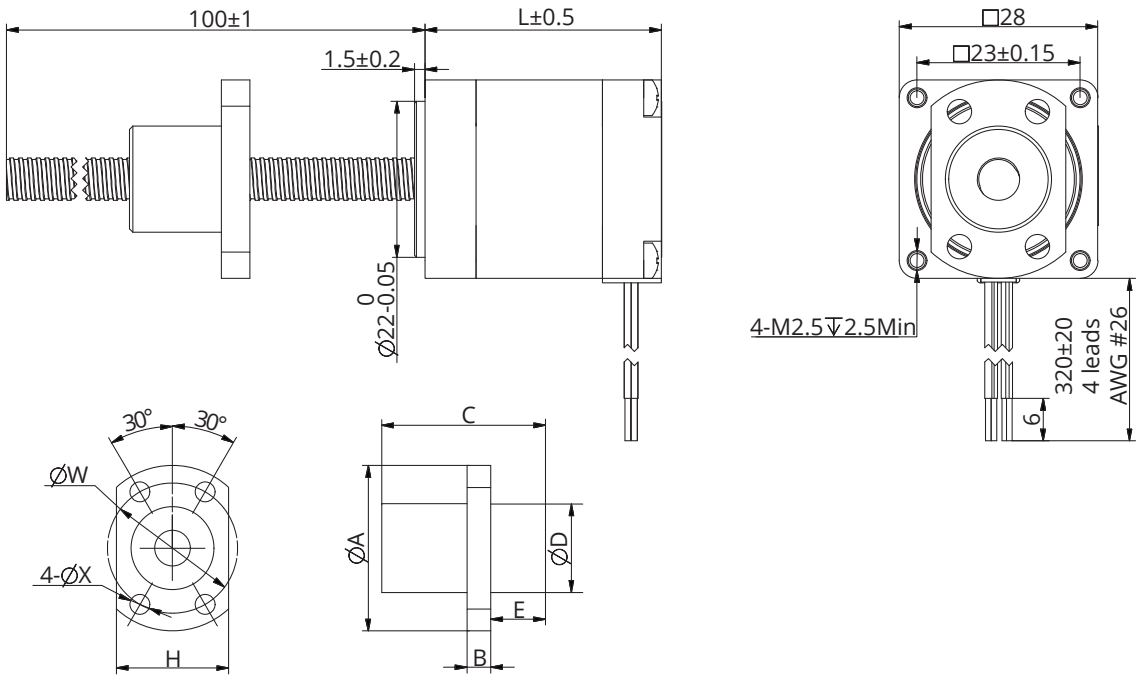

Stepper Ball Screw Specification

Ball screw type	0601	0602	0606
Ball size	Φ0.8	Φ0.8	Φ0.8
Number of threads	1	1	2
Thread direction	Right		
Shaft root dia	Φ5.3	Φ5.1	Φ5.2
Number of circuits	3.7×1	2.7×1	1.6×2
Shaft, nut material	SCM415H		
Surface hardness	HRC 58~62		
Anti-rust treatment	Anti-rust oil		
Grade	C7		

Nut Size	A	B	C	D	H	W	X	E	Axial play (mm)	Dynamic load (N)	Static load (N)
BS0601	24	3.5	15	12	16	18	3.4		≤0.02	680	1200
BS0602	24	3.5	16	12	16	18	3.4		≤0.02	880	1500
BS0606	27	4	17.2	14	16	21	3.4	8	≤0.02	870	1450

Note : All drawings are 1st-angle projection - ISO Compliant (3D models available)

Speed Thrust Curves

Size 11 Single Stack Speed Thrust Curves

N ※ Bipolar chopper constant current drive, operating current 1.0A (RMS) (Recommended Load Limit 115N)

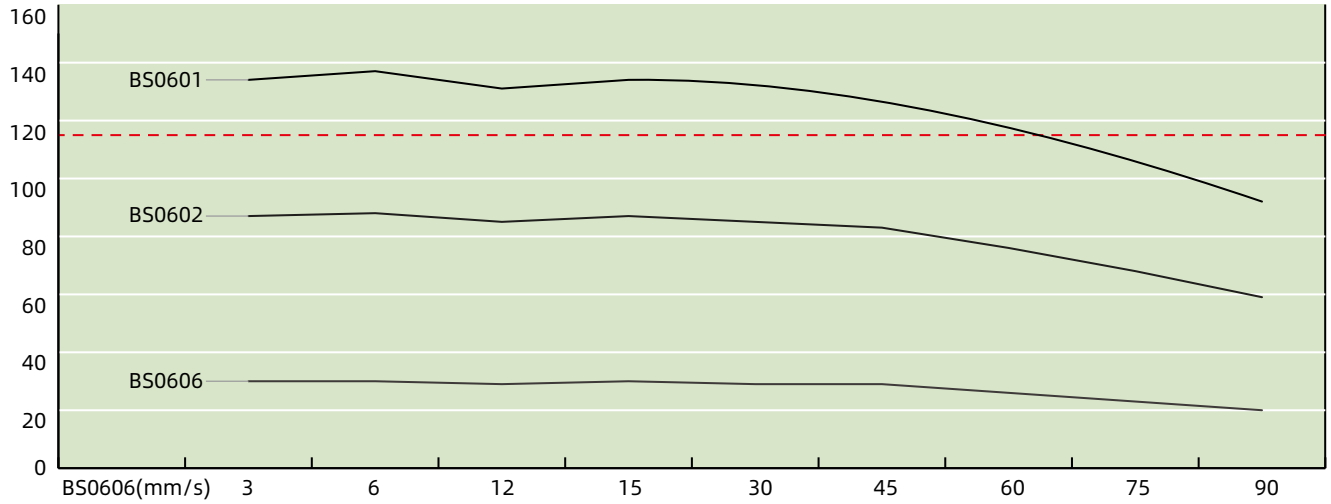

BS0606(mm/s)	3	6	12	15	30	45	60	75	90
BS0602(mm/s)	1	2	4	5	10	15	20	25	30
BS0601(mm/s)	0.5	1	2	2.5	5.0	7.5	10	12.5	15
Speed r/min	30	60	120	150	300	450	600	750	900
Pulse pps	100	200	400	500	1000	1500	2000	2500	3000

Size 11 Double Stack Speed Thrust Curves

N ※ Bipolar chopper constant current drive, operating current 0.95A (RMS) (Recommended Load Limit 140N)

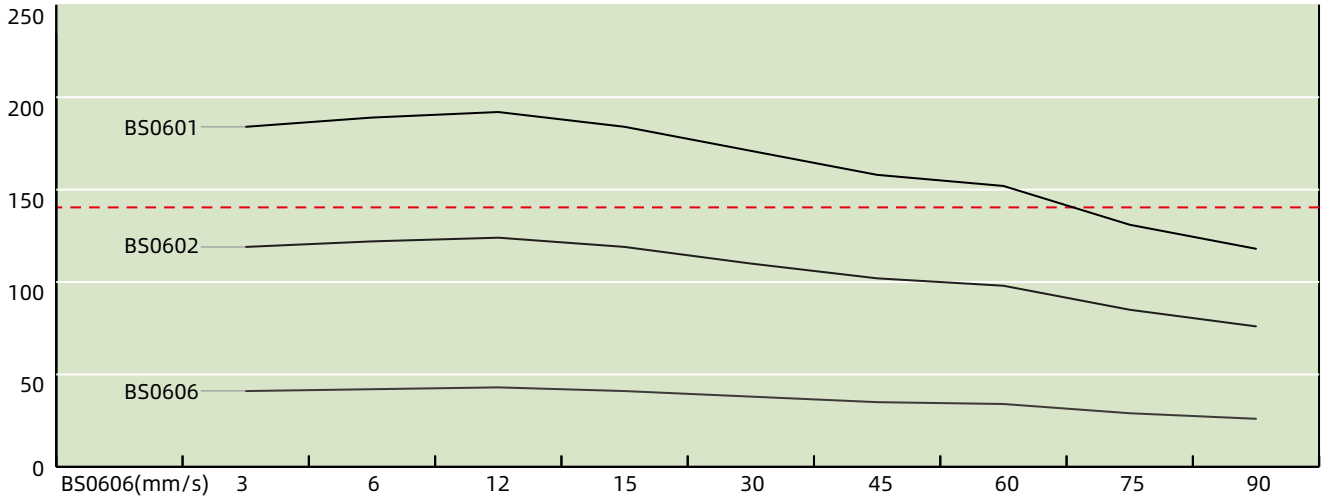

BS0606(mm/s)	3	6	12	15	30	45	60	75	90
BS0602(mm/s)	1	2	4	5	10	15	20	25	30
BS0601(mm/s)	0.5	1	2	2.5	5	7.5	10	12.5	15
Speed r/min	30	60	120	150	300	450	600	750	900
Pulse pps	100	200	400	500	1000	1500	2000	2500	3000

TEST CONDITION

Testing Voltage: 24Vdc, Driver Model: DS-OLS2-FPD bipolar, chopper driver at rated current (rms).
Motor thrust may vary depending on voltage and driver conditions. 50% thrust margin is recommended.

Size 14 (35mm) Series

Motor Characteristics

Motor	Voltage (V)	Current (A [RMS])	Resistance (Ω)	Inductance (mH)	Lead Wire No.	Motor Length (mm)
14E2110	3.5	1	3.5	3.6	4	33.6
14E2115	2.7	1.5	1.8	1.9	4	33.6
14E2210	6	1	6	7.2	4	45.6
14E2215	4	1.5	2.7	3.2	4	45.6

Dimensional Drawings

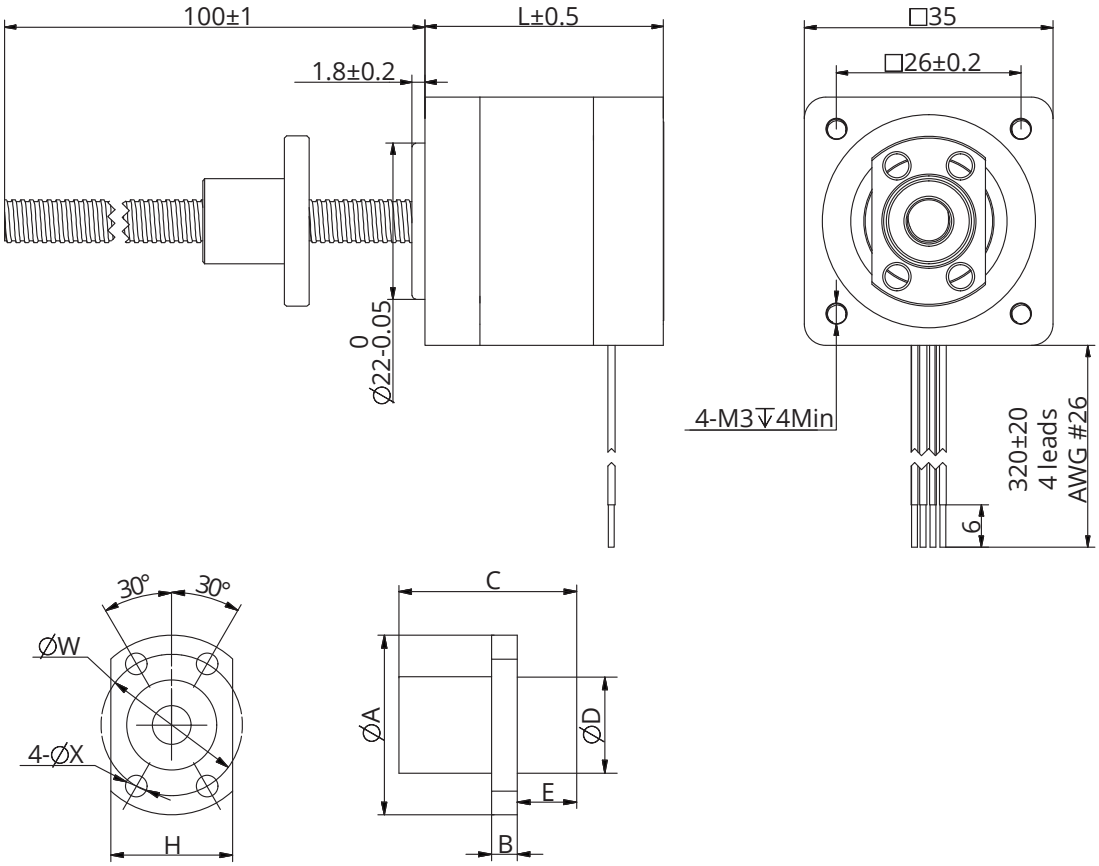

Note : All drawings are 1st-angle projection - ISO Compliant (3D models available)

Size 14 (35mm) Series

Stepper Ball Screw Specification

Ball screw type	0601	0602	0606	0801	0802	0805	0808	0810
Ball size	Φ0.8	Φ0.8	Φ0.8	Φ0.8	Φ1.5875	Φ1.5875	Φ1.5875	Φ1.5875
Number of threads	1	1	2	1	1	1	2	2
Thread direction	Right							
Shaft root dia	Φ5.3	Φ5.1	Φ5.2	Φ7.3	Φ6.6	Φ6.6	Φ6.7	Φ6.7
Number of circuits	3.7×1	2.7×1	1.6×2	3.7×1	3.7×1	2.7×1	1.6×2	1.6×2
Shaft, nut material	SCM415H							
Surface hardness	HRC 58~62							
Anti-rust treatment	Anti-rust oil							
Grade	C7							

Nut Size	A	B	C	D	H	W	X	E	Axial play (mm)	Dynamic load (N)	Static load (N)
BS0601	24	3.5	15	12	16	18	3.4		≤0.02	680	1200
BS0602	24	3.5	16	12	16	18	3.4		≤0.02	880	1500
BS0606	27	4	17.2	14	16	21	3.4	8	≤0.02	870	1450
BS0801	27	4	16	14	18	21	3.4		≤0.02	780	1650
BS0802	27	4	16	14	18	21	3.4		≤0.02	1300	2300
BS0805	31	4	28	18	20	25	3.4		≤0.02	1850	3000
BS0808	31	4	21.5	18	20	25	3.4	6	≤0.02	2200	3800
BS0810	31	4	24	18	20	25	3.4	7	≤0.02	2200	3900

Size 14 (35mm) Series

Speed Thrust Curves

Size 14 Single Stack Speed Thrust Curves

N ※ Bipolar chopper constant current drive, operating current 1.0A (RMS) (Recommended Load Limit 230N)

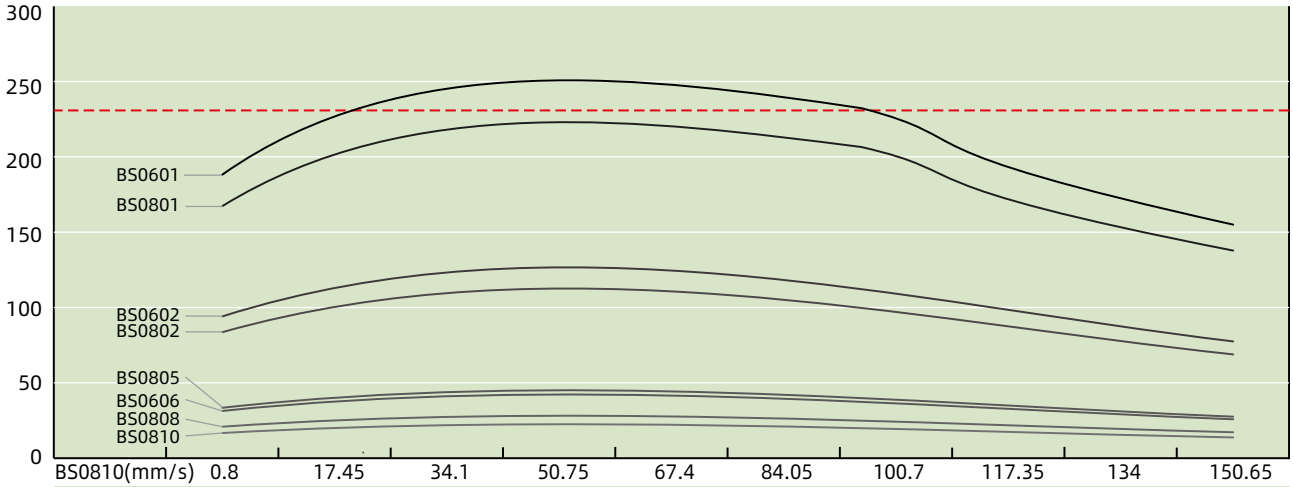

BS0810(mm/s)	0.8	17.45	34.1	50.75	67.4	84.05	100.7	117.35	134	150.65
BS0808(mm/s)	0.64	13.96	27.28	40.6	53.92	67.24	80.56	93.88	107.2	120.52
BS0805(mm/s)	0.4	8.73	17.05	25.38	33.7	42.03	50.35	58.68	67	75.33
BS0802(mm/s)	0.16	3.49	6.82	10.15	13.48	16.81	20.14	23.47	26.8	30.13
BS0801(mm/s)	0.08	1.75	3.41	5.08	6.74	8.41	10.07	11.74	13.4	15.07
BS0606(mm/s)	0.48	10.47	20.46	30.45	40.44	50.43	60.42	70.41	80.4	90.39
BS0602(mm/s)	0.16	3.49	6.82	10.15	13.48	16.81	20.14	23.47	26.8	30.13
BS0601(mm/s)	0.08	1.75	3.41	5.08	6.74	8.41	10.07	11.74	13.4	15.07
Speed r/min	5	100	200	300	400	500	600	700	800	900
Pulse pps	16	349	682	1015	1348	1681	2014	2347	2680	3013

Size 14 Double Stack Speed Thrust Curves

N ※ Bipolar chopper constant current drive, operating current 1.5A (RMS) (Recommended Load Limit 230N)

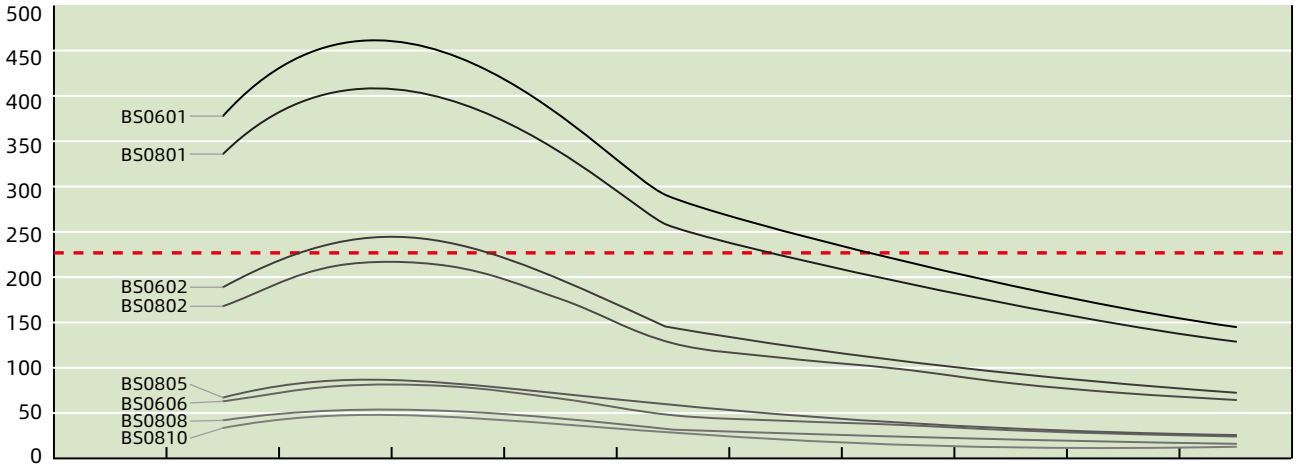

BS0810(mm/s)	0.8	17.45	34.1	50.75	67.4	84.05	100.7	117.35	134	150.65
BS0808(mm/s)	0.64	13.96	27.28	40.6	53.92	67.24	80.56	93.88	107.2	120.52
BS0805(mm/s)	0.4	8.73	17.05	25.38	33.7	42.03	50.35	58.68	67	75.33
BS0802(mm/s)	0.16	3.49	6.82	10.15	13.48	16.81	20.14	23.47	26.8	30.13
BS0801(mm/s)	0.08	1.75	3.41	5.08	6.74	8.41	10.07	11.74	13.4	15.07
BS0606(mm/s)	0.48	10.47	20.46	30.45	40.44	50.43	60.42	70.41	80.4	90.39
BS0602(mm/s)	0.16	3.49	6.82	10.15	13.48	16.81	20.14	23.47	26.8	30.13
BS0601(mm/s)	0.08	1.75	3.41	5.08	6.74	8.41	10.07	11.74	13.4	15.07
Speed r/min	5	100	200	300	400	500	600	700	800	900
Pulse pps	16	349	682	1015	1348	1681	2014	2347	2680	3013

TEST CONDITION

Testing Voltage: 24Vdc, Driver Model: DS-OLS2-FPD bipolar, chopper driver at rated current (rms).
Motor thrust may vary depending on voltage and driver conditions. 50% thrust margin is recommended.

Size 17 (42mm) Series

Motor Characteritics

Motor	Voltage (V)	Current (A [RMS])	Resistance (Ω)	Inductance (mH)	Lead Wire No.	Motor Length (mm)
17E2110	3.8	1	3.8	5	4	34.1
17E2115	2.78	1.5	1.85	2.2	4	34.1
17E2212	4.56	1.2	3.8	8	4	48.1
17E2225	2.5	2.5	1	1.8	4	48.1

Dimensional Drawings

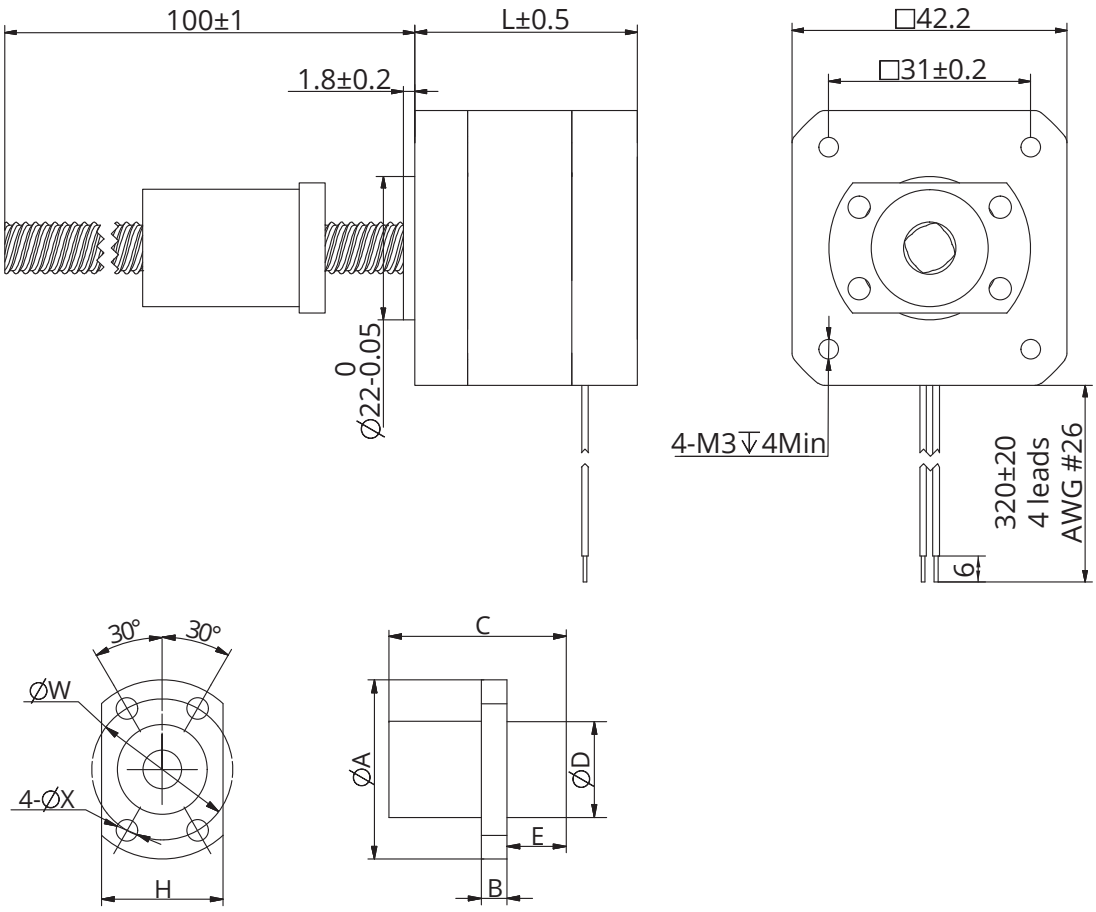

Note : All drawings are 1st-angle projection - ISO Compliant (3D models available)

Size 17 (42mm) Series

Stepper Ball Screw Specification

Ball screw type	0801	0802	0805	0808	0810
Ball size	Φ0.8	Φ1.5875	Φ1.5875	Φ1.5875	Φ1.5875
Number of threads	1	1	1	2	2
Thread direction	Right				
Shaft root dia	Φ7.3	Φ6.6	Φ6.6	Φ6.7	Φ6.7
Number of circuits	3.7×1	3.7×1	2.7×1	1.6×2	1.6×2
Shaft, nut material	SCM415H				
Surface hardness	HRC 58~62				
Anti-rust treatment	Anti-rust oil				
Grade	C7				

Nut Size	A	B	C	D	H	W	X	E	Axial play (mm)	Dynamic load (N)	Static load (N)
BS0801	27	4	16	14	18	21	3.4		≤0.02	780	1650
BS0802	27	4	16	14	18	21	3.4		≤0.02	1300	2300
BS0805	31	4	28	18	20	25	3.4		≤0.02	1850	3000
BS0808	31	4	21.5	18	20	25	3.4	6	≤0.02	2200	3800
BS0810	31	4	24	18	20	25	3.4	7	≤0.02	2200	3900

Speed Thrust Curves

Size 17 Single Stack Speed Thrust Curves

N ※ Bipolar chopper constant current drive, operating current 1.5A (RMS) (Recommended Load Limit 230N)

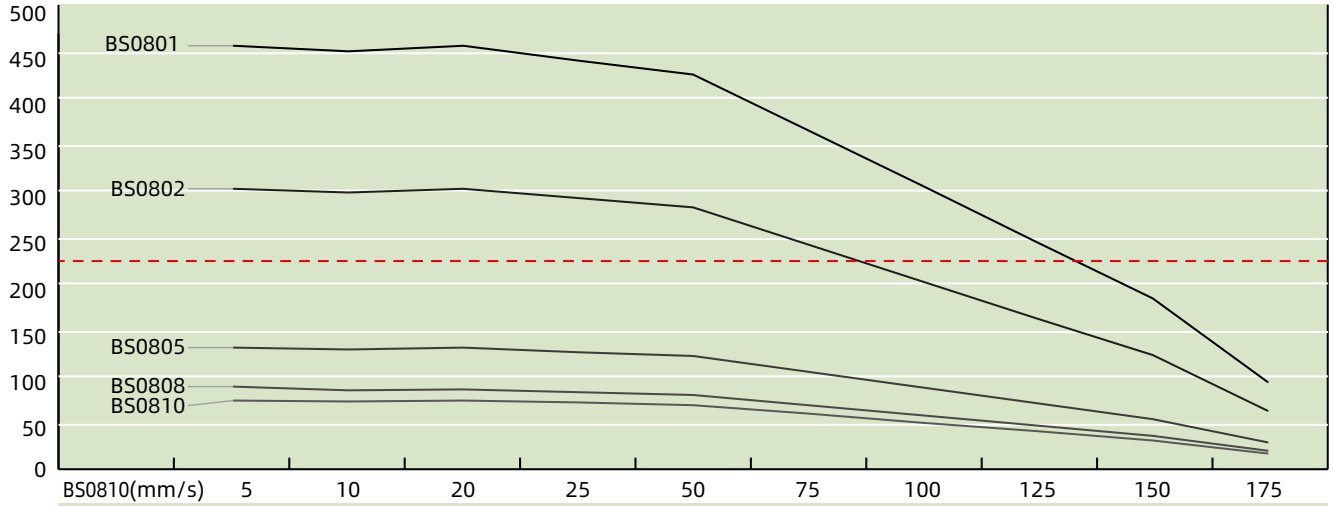

BS0810(mm/s)	5	10	20	25	50	75	100	125	150	175
BS0808(mm/s)	4	8	16	20	40	60	80	100	120	140
BS0805(mm/s)	2.5	5	10	12.5	25	37.5	50	62.5	75	87.5
BS0802(mm/s)	1	2	4	5	10	15	20	25	30	35
BS0801(mm/s)	0.5	1	2	2.5	5	7.5	10	12.5	15	17.5
Speed r/min	30	60	120	150	300	450	600	750	900	1050
Pulse pps	100	200	400	500	1000	1500	2000	2500	3000	3500

Size 17 Double Stack Speed Thrust Curves

N ※ Bipolar chopper constant current drive, operating current 2.5A (RMS) (Recommended Load Limit 230N)

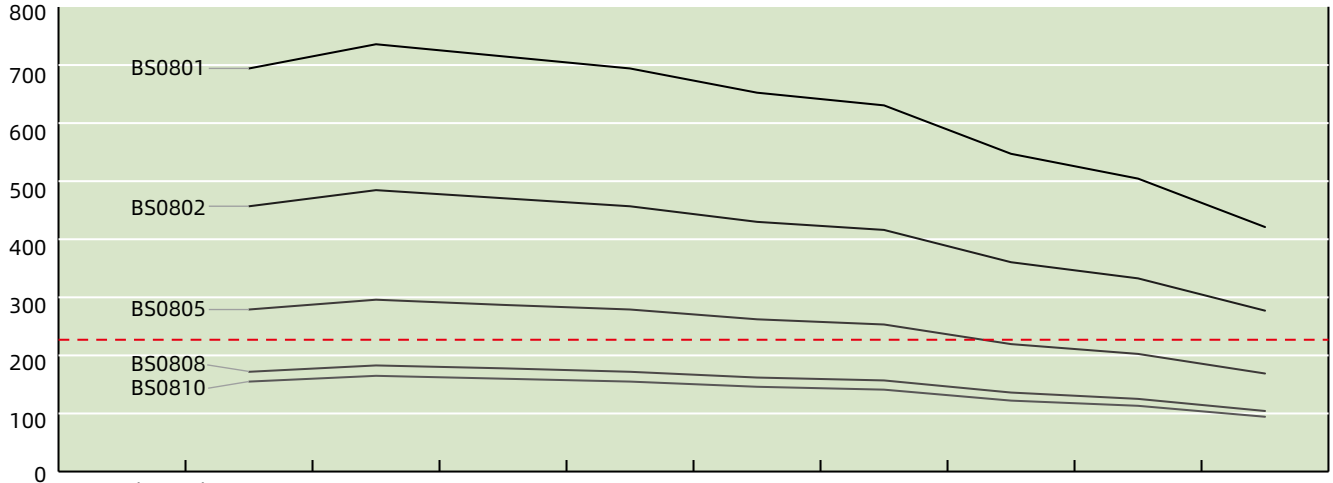

BS0810(mm/s)	5	10	20	25	50	75	100	125	150
BS0808(mm/s)	4	8	16	20	40	60	80	100	120
BS0805(mm/s)	2.5	5	10	12.5	25	37.5	50	62.5	75
BS0802(mm/s)	1	2	4	5	10	15	20	25	30
BS0801(mm/s)	0.5	1	2	2.5	5	7.5	10	12.5	15
Speed r/min	30	60	120	150	300	450	600	750	900
Pulse pps	100	200	400	500	1000	1500	2000	2500	3000

TEST CONDITION

Testing Voltage: 24Vdc, Driver Model: DS-OLS2-FPD bipolar, chopper driver at rated current (rms).
Motor thrust may vary depending on voltage and driver conditions. 50% thrust margin is recommended.

Size 23 (57mm) Series

Motor Characteristics

Motor	Voltage (V)	Current (A [RMS])	Resistance (Ω)	Inductance (mH)	Lead Wire No.	Motor Length (mm)
23E2120	3.5	2	1.75	4.1	4	45
23E2130	2.4	3	0.8	1.7	4	45
23E2225	5	2.5	2	5.2	4	65
23E2240	2.8	4	0.7	2	4	65

Dimensional Drawings

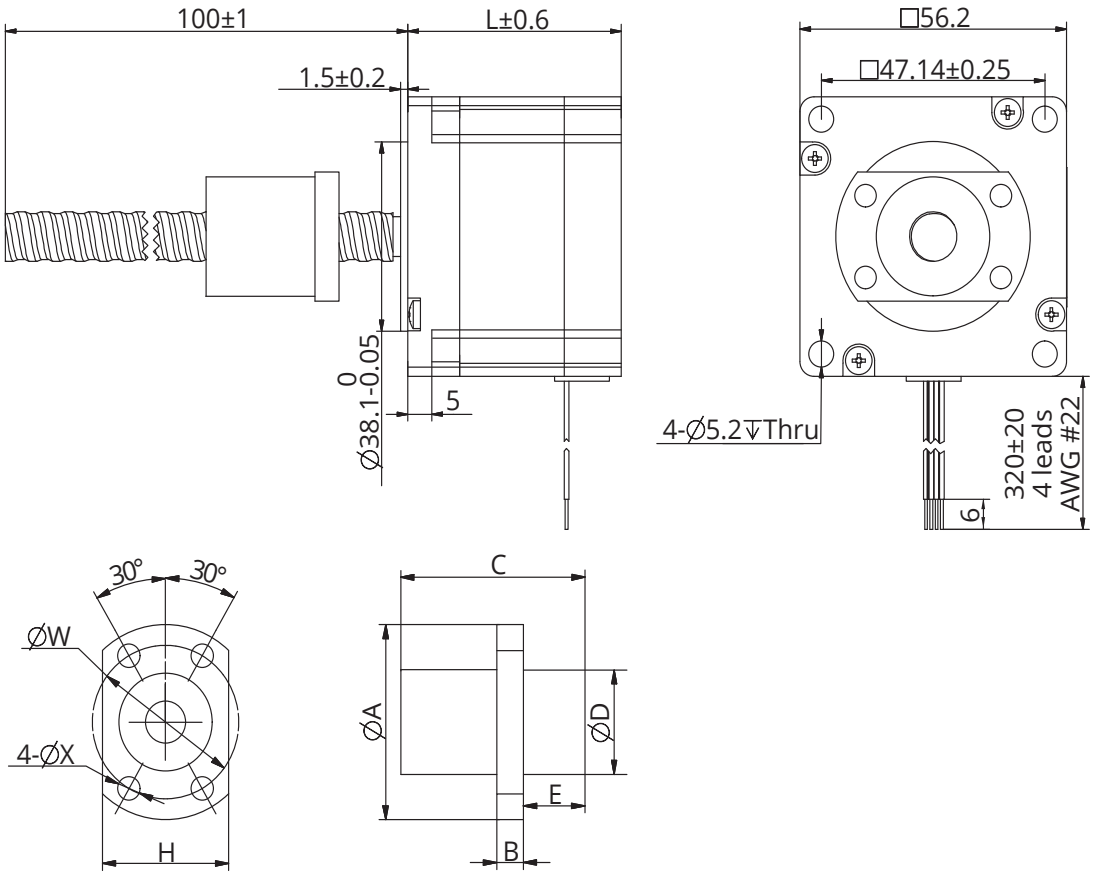

Note : All drawings are 1st-angle projection - ISO Compliant (3D models available)

Size 23 (57mm) Series

Stepper Ball Screw Specification

Ball screw type	1002	1202	1205	1210	1220
Ball size	Φ1.5875	Φ1.5875	Φ2.5	Φ2.381	Φ2.5
Number of threads	1	1	1	2	1
Thread direction	Right				
Shaft root dia	Φ8.6	Φ10.6	Φ10.3	Φ10.2	Φ9.7
Number of circuits	3.7×1	3.7×1	2.8×1	1.7×2	1.8×1
Shaft, nut material	SCM415H				
Surface hardness	HRC 58~62				
Anti-rust treatment	Anti-rust oil				
Grade	C7				

Nut Size	A	B	C	D	H	W	X	E	Axial play (mm)	Dynamic load (N)	Static load (N)
BS1002	34.5	5	28	18	22	27	4.5		≤0.02	1450	2800
BS1202	37	5	28	20	24	29	4.5		≤0.02	1600	3700
BS1205	40	10	30	24	30	32	4.5	15	≤0.02	6610	13160
BS1210	40	10	42	24	30	32	4.5	27	≤0.02	6420	12870
BS1220	40	5	46	24	24	32	4.5	37	≤0.02	6700	10100

Size 23 (57mm) Series

Speed Thrust Curves

Size 23 Single Stack Speed Thrust Curves

※ Bipolar chopper constant current drive, operating current 3.0A (RMS) (Recommended Load Limit 910N)

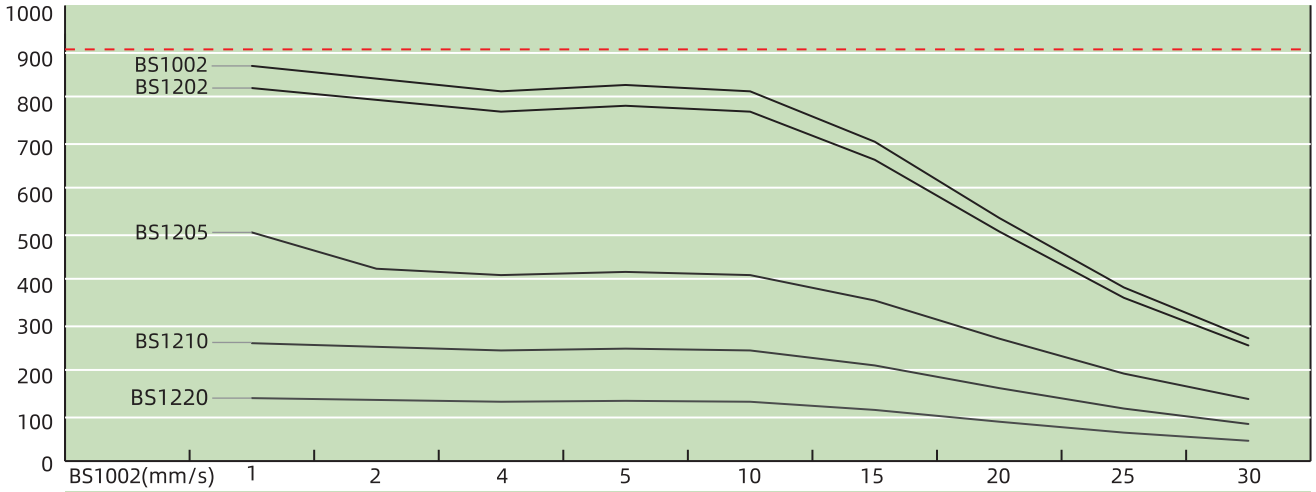

BS1002(mm/s)	1	2	4	5	10	15	20	25	30
BS1202(mm/s)	1	2	4	5	10	15	20	25	30
BS1205(mm/s)	2.5	5	10	12.5	25	37.5	50	62.5	75
BS1210(mm/s)	5	10	20	25	30	75	100	125	150
BS1220(mm/s)	10	20	40	50	100	150	200	250	300
Speed r/min	30	60	120	150	300	450	600	750	900
Pulse pps	100	200	400	500	1000	1500	2000	2500	3000

Size 23 Double Stack Speed Thrust Curves

※ Bipolar chopper constant current drive, operating current 4.0A (RMS) (Recommended Load Limit 910N)

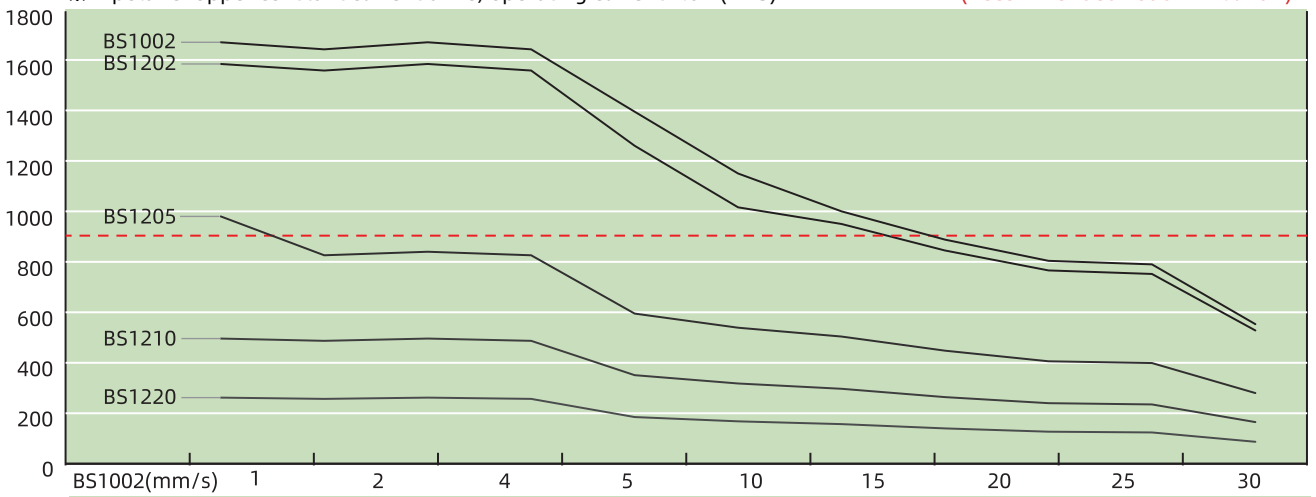

BS1002(mm/s)	1	2	4	5	10	15	20	25	30
BS1202(mm/s)	1	2	4	5	10	15	20	25	30
BS1205(mm/s)	2.5	5	10	12.5	25	37.5	50	62.5	75
BS1210(mm/s)	5	10	20	25	30	75	100	125	150
BS1220(mm/s)	10	20	40	50	100	150	200	250	300
Speed r/min	30	60	120	150	300	450	600	750	900
Pulse pps	100	200	400	500	1000	1500	2000	2500	3000

TEST CONDITION

Testing Voltage: 40Vdc, Driver Model: DS-OLS4-FPD bipolar, chopper driver at rated current (rms).
Motor thrust may vary depending on voltage and driver conditions. 50% thrust margin is recommended.

Accessories and Options

Stepper Ball Screw End Machining

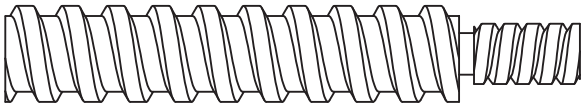	Thread End	Screw end machining depends on screw diameter. For customized screw end machining are available, please contact DINGS' representatives for more details.
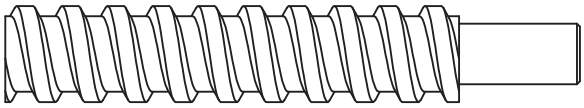	Smooth End	
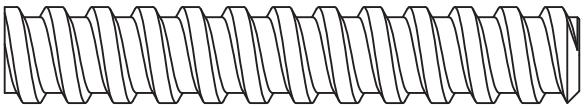	None	
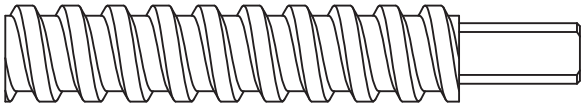	Customized	

Accessories and Options

Encoder

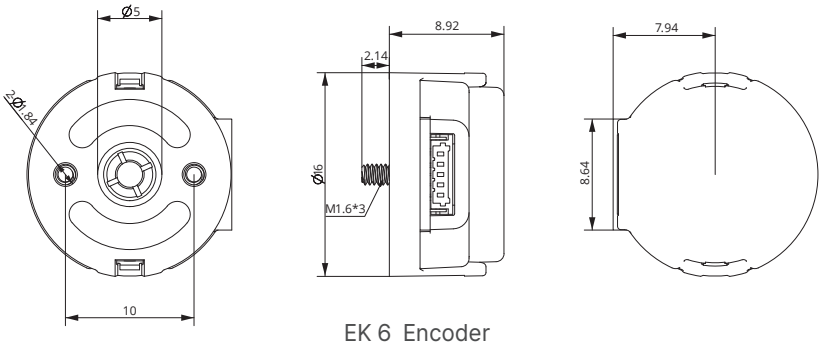

EK 6 Encoder

- **EK 6 Encoder (Used for size 6 motors) * No Index**

Resolution (CPR)	250	256	500	512	1000	1024	2000	2048	4000	4096
Single ended output	0	1	2	3	4	5	6	7	8	9

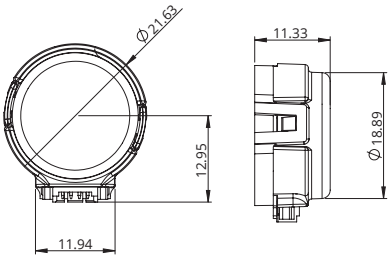

EK 1 Encoder - single ended output

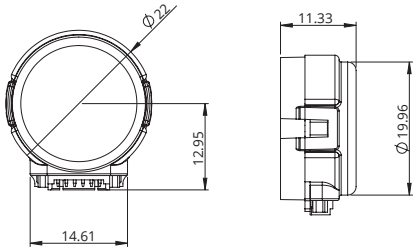

EK 1 Encoder - differential output

- **EK 1 Encoder (Used for size 8, 11, 14, 17 motors) * No Index**

Resolution (CPR)	100	108	120	125	128	200	250	256	300	360	400	500	1000	512	720	800
Single ended output	0	1	2	3	4	5	6	7	8	9	10	11	12	13	14	15
Differential output	A	B	C	D	E	F	G	H	I	J	K	L	M	N	O	P

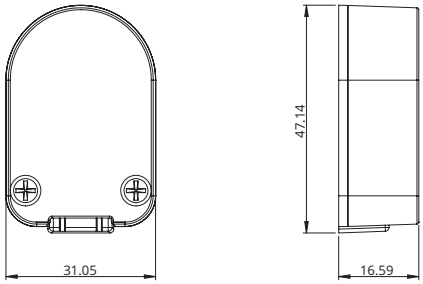

EK 2 Encoder - single ended output

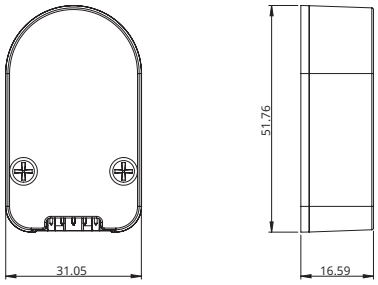

EK 2 Encoder - differential output

- **EK 2 Encoder (Used for size 14, 17, 23, 24 motors)**

Resolution (CPR)	50	100	192	200	250	256	360	400	500	720	900	1000	1250	2000	2500	4000	5000
Single ended output	0	1	2	3	4	5	6	7	8	9	10	11	12				
Differential output	A	B	C	D	E	F	G	H	I	J	K	L	M	N	O	P	Q

Accessories and Options

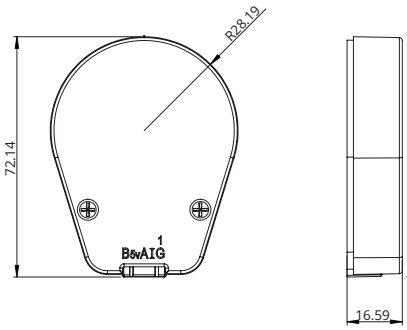

EK 3 Encoder - single ended output

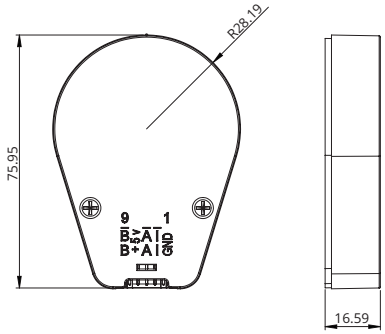

EK 3 Encoder - differential output

- **EK 3 Encoder (Used for size 23, 24, 34 motors)**

Resolution (CPR)	64	100	200	500	1000	1800	2000	2500	3600	4000	5000	7200	8000	10000
Single ended output	0	1	2	3	4	5	6	7	8					
Differential output		A	B	C	D	E	F	G	H	I	J	K	L	M

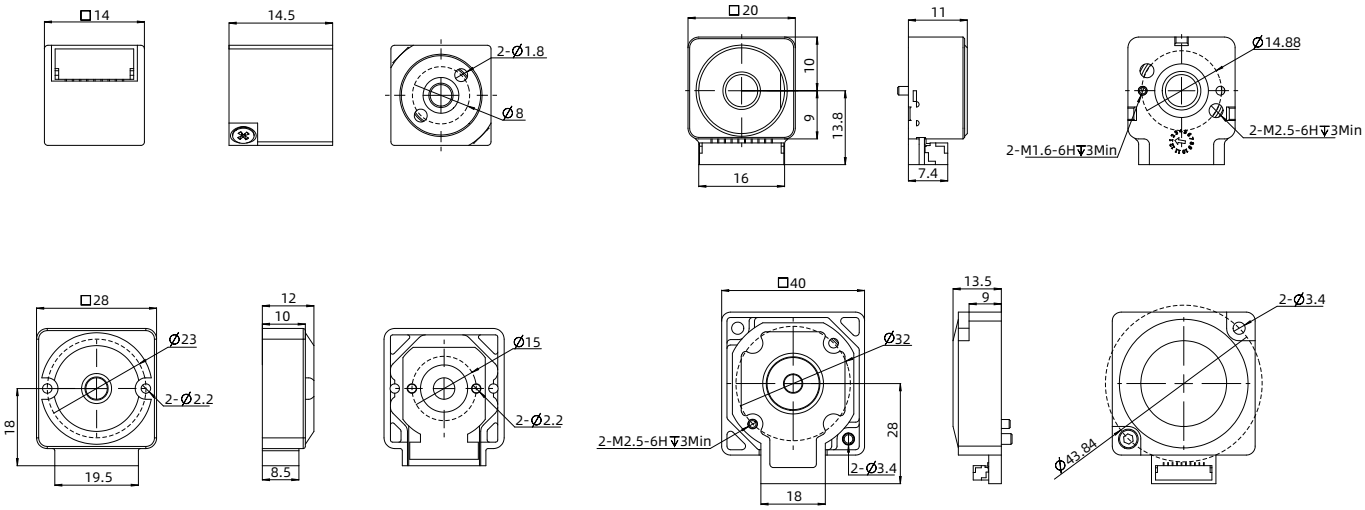

- **EK 7 Encoder (Used for size 6, 8, 11, 14, 17, 23, 24 External, Non-Captive motors)**

Resolution (CPR)	-	-	-	1000	-	-	2000	-	-	-
Single ended output	0	1	2	3	4	5	6	7	8	9
Differential output	A	B	C	D	E	F	G	H	I	J

Optional Brake (See page A-54)

Installation Guide

Precaution of handling and operation

This product integrates the motor and screw together, and repair is not possible for either of these components. Please handle with care to avoid damage to the assembly.

Precaution for operation

1. Before use, please read instruction manuals and follow the precautions below.
2. Do not hit or drop the shaft, do not apply Axial load or radial load exceeding specifications, it may cause malfunction.
3. Before use, please check that the product has no defect, and product is the same as your order.
4. Do not disassemble each component, dust may get inside the product. It may deteriorate accuracy.
5. Please prevent contamination from dust or swarf. Dust or swarf may cause damage to ball screw, Which lead to deteriorating the function.
6. Lubrication is required under the ball screw operation. Lubrication condition should be checked every 2-3 months. If grease is contaminated, remove old grease and replace with new one.
7. Do not use the motor exceeding our specification in load or speed.
8. Allowing ball screw nut to over-run may result in malfunctioning due to balls escaping, damage to recycling parts, and indentation on the raceways. Therefore ball screw nut must never be allowed to over-run. If over- running occurs, contact us for an inspection with charge.
9. Do not hold the motor lead wire. It is for fixation, do not use it as movement.
10. The motor torque and speed characteristics may vary from the specifications, depending on the load conditions or Driver used. Please adjust as appropriate.
11. The motor has a resonant point within the specifications. Please avoid it when in use.

Precaution for safety

1. If abnormal odor,noise,smoke,overheating,or vibration occurs,stop operation immediately and turn the power off.
2. Do not use the exceeding rated current.
3. The motor may overheat depending on the load condition or Driver used. Make sure that the motor surface temperature dose not exceed 80°C when in use.
4. Check the wire connection type,Drive system, and phase sequence. Inappropriate connection leads to malfunction.
5. Do not bend ,pull or pinch the motor lead wire.
6. Do not touch moving parts during operation.
7. Disconnect from the controller before performing dielectric withstanding voltage test of the motor or Insulation test.
8. Please switch off the Driver ,when inspection or maintenance.

Operating environment

1. Operating environment should be 0-40°C in temperature and 20-80%RH in humidity. Do not use it under dew condensation, corrosive gas or inflammable gas environment.
2. Do not use it under strong electric field, strong magnetic field.
3. Please prevent from swarf, oil mist, cutting fluid, water/moisture, salt spray, organic solvent and other contamination.
4. The motor can not be used under the vibration, impact, vacuum, and other special environment.

Ball screw maintenance

1. Ball screw pair protection device

(1) The use of the ball screw in the use of the process, is strictly prohibited dust or dirt entering, and therefore must be equipped with protective device.

(2) The ball screw pair is exposed on the machine tool, and a closed protective cover shall be adopted, such as the use of a coil spring steel tape sleeve, a telescopic sleeve and a folding sleeve, etc.. When you install, connect one end of the shield to the side of the ball nut. The other end is fixed on the supporting seat of the ball screw.

(3) The position of the ball screw is located in a position, and the sealing ring is used to protect the ball screw. Sealing ring is arranged on both ends of the nut. Contact and non contact type two sealing ring.

2. Lubrication of Ball screw

(1) The ball screw pair is usually used for two kinds of lubricants, lithium based grease and the main shaft oil. Lubricating grease generally and in the thread rolling and nut shell space, spindle oil through the shell of an oil hole injection nut of the space.

(2) Use of the process, every half a year to replace the grease, clean the old grease, coated with new grease. The ball screw pair lubricated with spindle oil can be oiled once before each operation of the machine.

PM Stepper Linear Actuator

DINGS' Permanent Magnet (PM) Stepper Linear Actuators are available in sizes of 15, 20, 25, 36, and 46 mm.

The 15 mm and 46 mm series are available in External and Kaptive types, while the 20, 25, and 36 mm series also include Non-captive.

They offer a wide range of lead options, from 0.025 mm/step to 0.3333 mm/step, with a maximum thrust of up to 115 N. This cost-effective solution delivers excellent performance while utilizing high-quality lead screws and Delrin plastic nuts for reliable operation.

Typical applications include medical equipment, laboratory devices, microscopes, testing equipment, and measurement systems.

Part number construction	A-82
Product overview	A-83
15 mm	A-84
20 mm	A-86
25 mm	A-90
36 mm	A-94
46 mm	A-98

Part Number Construction

E	25	P	A	1	4	A	05	-	X	-	001
①	②	③	④	⑤	⑥	⑦	⑧		⑨		⑩

① Motor Type
- E = External
- N = Non-captive
- K = Kaptive

② Motor Size
- 15mm
- 20mm
- 25mm
- 36mm
- 46mm

③ Product Name
- PM stepper linear actuator

④ Mounting
- A = Flange and wiring box
- B = Flange only
- C = Wiring box only
- D = No flange or wiring box
- A and C are not available for Unipolar (6 wires)

⑤ Motor Step Angle
- 1 = 7.5°
- 2 = 15°
- 3 = 18°

⑥ Number of Wires
- 4 = Bipolar (4 wires)
- 6 = Unipolar (6 wires)

⑦ Lead Screw Code
- Please refer to the lead screw code selection table

⑧ Winding Code
- 05 = 5V
- 12 = 12V

⑨ Screw Length / Stroke
- Kaptive = stroke distance
- Non-captive = total length of screw
- External = screw extension length from the mounting flange

⑩ Customization Sequence Number

Example

Naming code	E25PA14AA05-X-001
Description	Φ25 mm size External type with mounting flange and wiring box 2-phase 7.5° step angle Bipolar Screw Lead AA 5V winding Screw extension X mm Customization sequence number is 001

Product Overview

Motor Size	Screw diameter (mm)	Screw lead (mm)	Travel per step (mm)			Max. thrust force (N)	Power consumption (W)	Screw lead code
			7.5°	15°	18°			
Φ15	Φ3	0.5	-	-	0.025	15	1.6	AD
		1	-	-	0.05			AB
Φ20	Φ3.5	0.3	0.00625	0.0125	-	35	3.4	AF
		0.6096	0.0127	0.0254	-			AA
		1.0	0.02083	0.0417	-			AB
		1.2192	0.0254	0.0508	-			B
		2.0	0.04167	0.0833	-			G
		2.4384	0.0508	0.1016	-			J
		4.0	0.0833	0.1667	-			M
Φ25	Φ3.5	0.3	0.00625	0.0125	-	65	3.9	AF
		0.6096	0.0127	0.0254	-			AA
		1.0	0.02083	0.0417	-			AB
		1.2192	0.0254	0.0508	-			B
		2.0	0.04167	0.0833	-			G
		2.4384	0.0508	0.1016	-			J
		4.0	0.0833	0.1667	-			M
	Φ4.77	0.635	0.0132	0.0265	-			A
		1.27	0.0265	0.0529	-			D
		2.54	0.0529	0.1058	-			K
Φ36	Φ4.77	0.635	0.0132	0.0265	-	115	5.6	A
		1.27	0.0265	0.0529	-			D
		2.54	0.0529	0.1058	-			K
	Φ6.35	0.6096	0.0127	0.0254	-			AA
		1.2192	0.0254	0.0508	-			B
		2.4384	0.0508	0.1016	-			J
Φ46	Φ6.35	0.6096	0.0127	-	-	250	10	AA
		1.2192	0.0254	-	-			B
		2.4384	0.0508	-	-			J

15mm Series

Motor Characteristics

Polarity	Bipolar		
Linear actuator type	External, Kaptive		
Step angle	18°		
Winding	4V	5V	12V
Phase current	200mA	160mA	70mA
Phase resistance	20Ω	33Ω	180Ω
Phase inductance	506mH	8.7mH	49mH
Power consumption	1.6W		
Rotor inertia	1gcm²		
Insulation class	E		
Insulation resistance	100MΩ		
Mass	15g		

Available Lead Screw and Travel per Step

Step angle	Screw lead		Travel per step		Screw lead code
	mm	inch	mm	inch	
18°	0.5	0.0197	0.025	0.000985	AD
	1	0.0394	0.05	0.00197	AB

Dimensional Drawings

- External

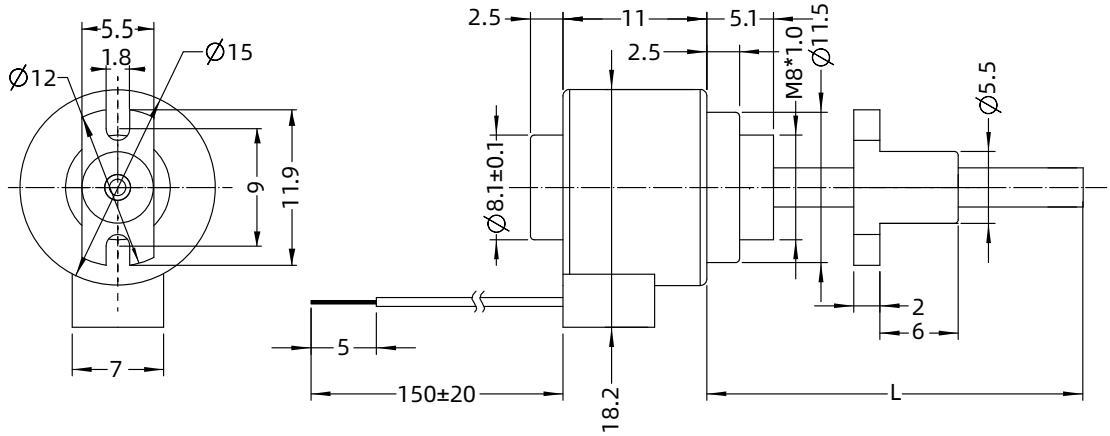

- Kaptive

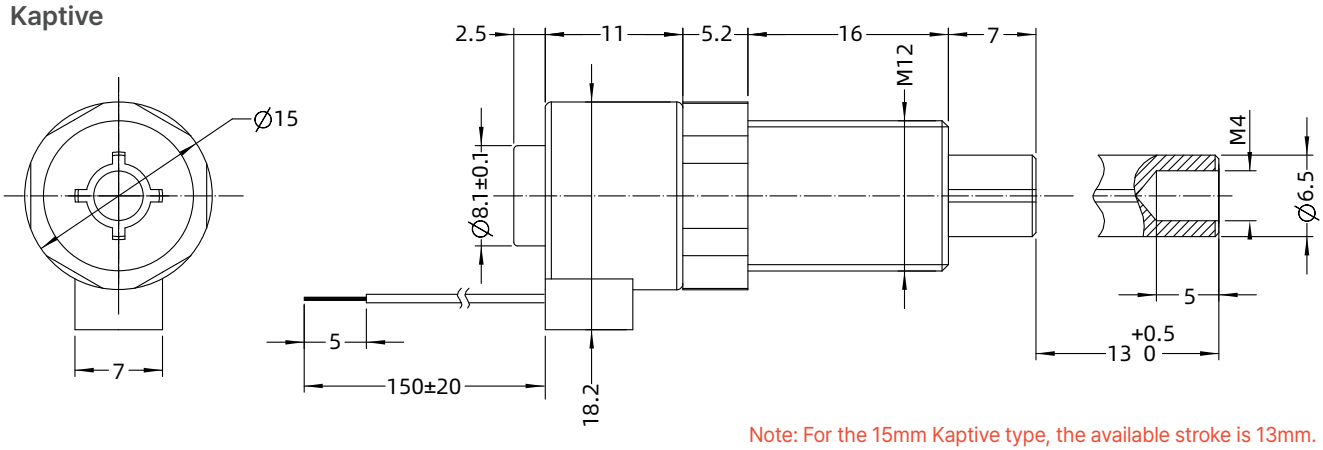

Note: For the 15mm Kaptive type, the available stroke is 13mm.

Speed Thrust Curves

15mm bi-polar (5V/18°) under 24 VDC chopper drive

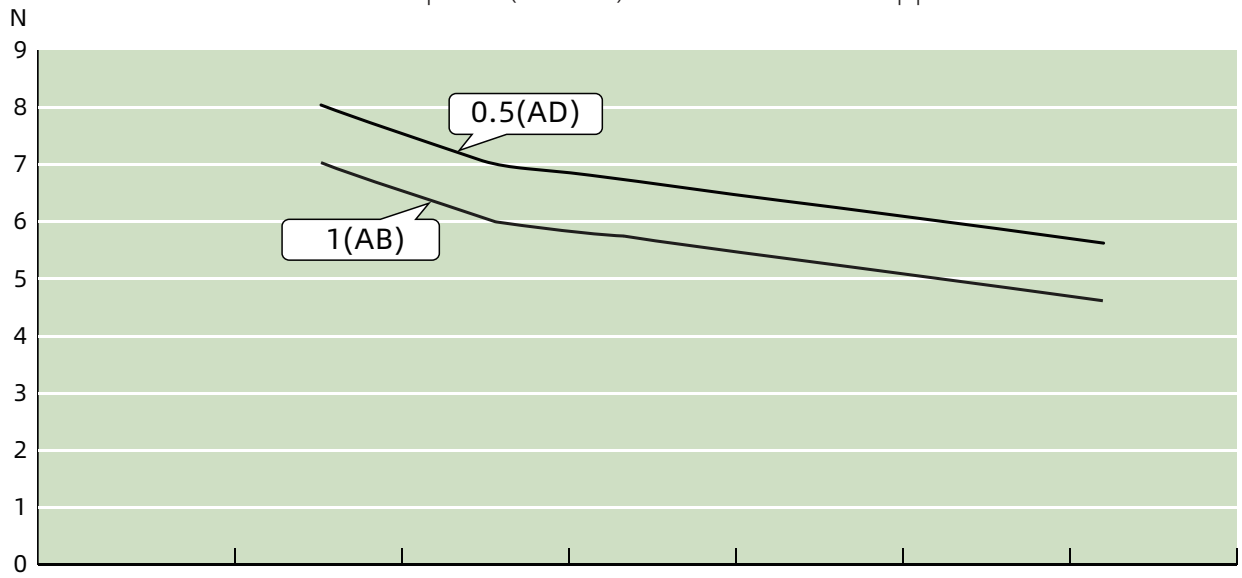

AD (mm/s)	5	10	20	30	40	50
AB (mm/s)	10	20	40	60	80	100
Speed r/Min	600	1200	1800	2400	3000	3600
Pulse PPS	200	400	600	800	1000	1200

20mm Series

Motor Characteristics

Polarity	Bipolar			
Linear actuator type	External, Non-captive, Kaptive			
Step angle	7.5°		15°	
Winding	5V	12V	5V	12V
Phase current	370mA	160mA	370mA	160mA
Phase resistance	13.5Ω	74.5Ω	13.5Ω	76Ω
Phase inductance	6.5mH	36mH	4mH	25mH
Power consumption	3.4W			
Rotor inertia	1.05gcm²			
Insulation class	B			
Insulation resistance	100MΩ			
Mass	35g			

Available Lead Screw and Travel per Step

Step angle	Screw lead		Travel per step		Screw lead code
	mm	inch	mm	inch	
7.5°	0.3	0.0118	0.00625	0.00025	AF
	0.6096	0.024	0.0127	0.0005	AA
	1.0	0.03937	0.02083	0.00082	AB
	1.2192	0.048	0.0254	0.001	B
	2.0	0.07874	0.04167	0.00164	G
	2.4384	0.096	0.0508	0.002	J
	4.0	0.15748	0.0833	0.00328	M
15°	0.3	0.0118	0.0125	0.00049	AF
	0.6096	0.024	0.0254	0.001	AA
	1.0	0.03937	0.0417	0.00164	AB
	1.2192	0.048	0.0508	0.002	B
	2.0	0.07874	0.0833	0.00328	G
	2.4384	0.096	0.1016	0.004	J
	4.0	0.15748	0.1667	0.00656	M

Dimensional Drawings

- External

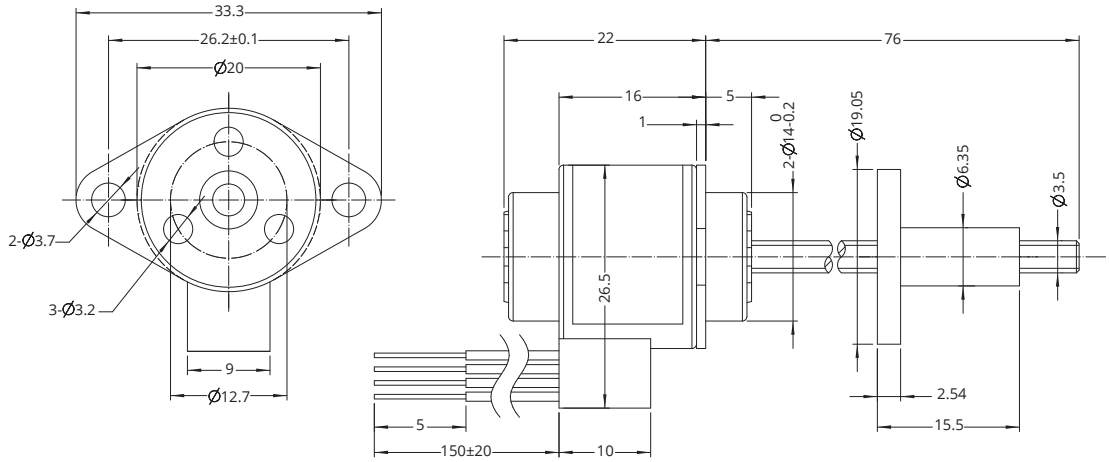

- Non-captive

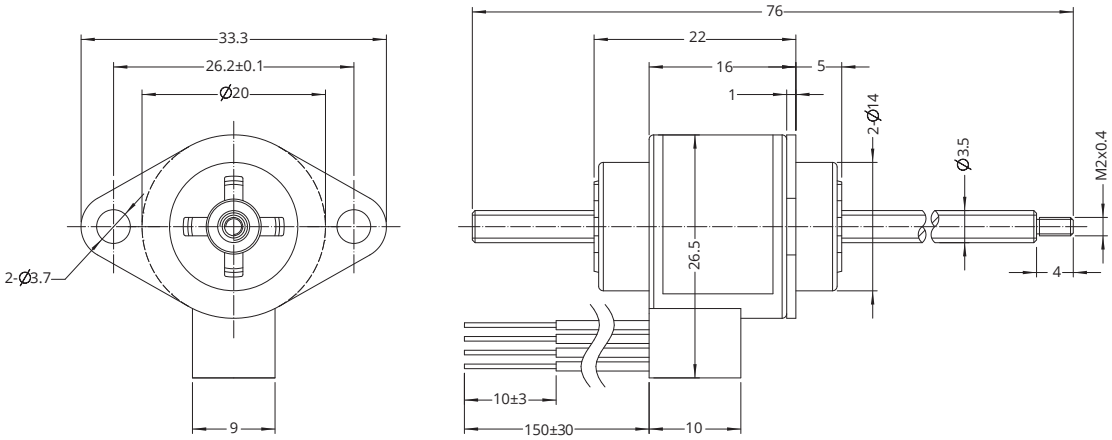

- Kaptive

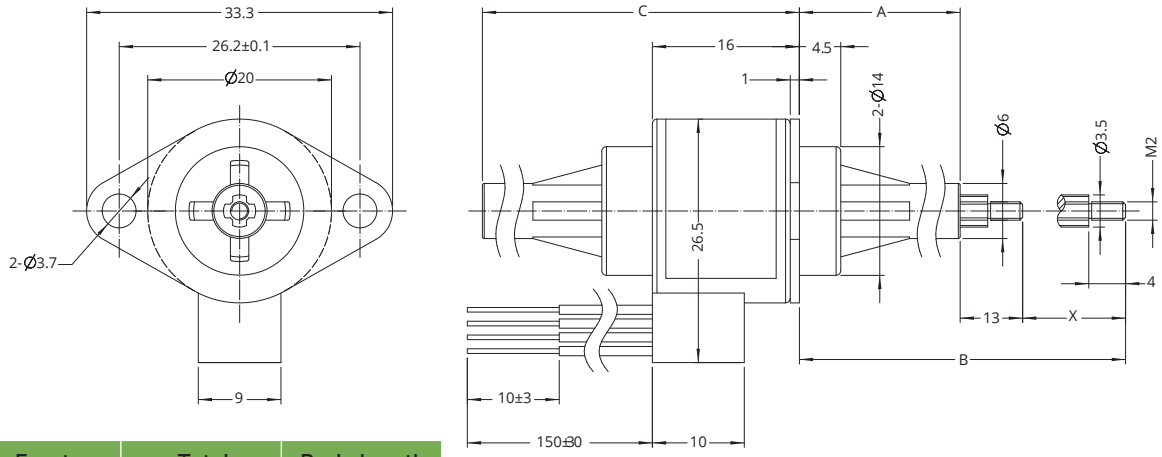

Stroke X	Front extension A	Total extension B	Body length C (Max.)
14	13.5±0.25	40.5	30.5
18	17.5±0.25	48.5	34.5
25	24.5±0.25	62.5	41.5
31	30.5±0.25	74.5	47.5

Note : All drawings are 1st-angle projection - ISO Compliant (3D models available)

20mm Series

Speed Thrust Curves

20PM Bipolar Motor (5V / 7.5°) Thrust & Speed Curve (24 VDC Constant Current Drive)

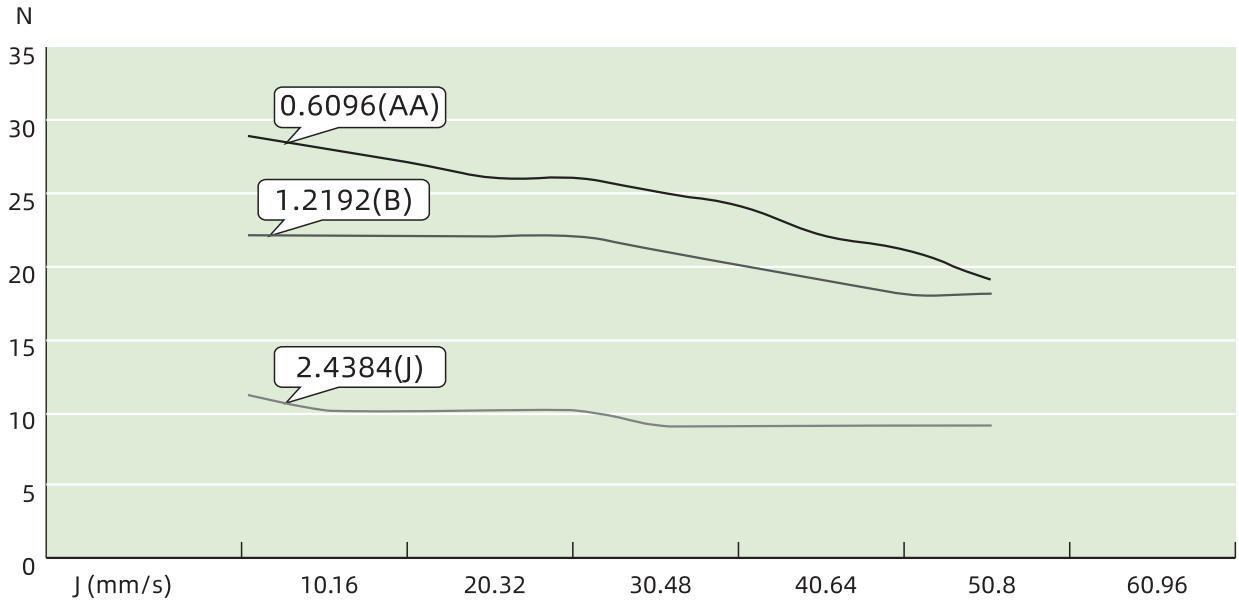

J (mm/s)	10.16	20.32	30.48	40.64	50.8	60.96
B (mm/s)	5.08	10.16	15.24	20.32	25.4	30.48
AA (mm/s)	2.54	5.08	7.62	10.16	12.7	15.24
Speed (r/min)	250	500	750	1000	1250	1500
Pulse (PPS)	200	400	600	800	1000	1200

20PM Bipolar Motor (12V / 7.5°) Thrust & Speed Curve (24 VDC Constant Current Drive)

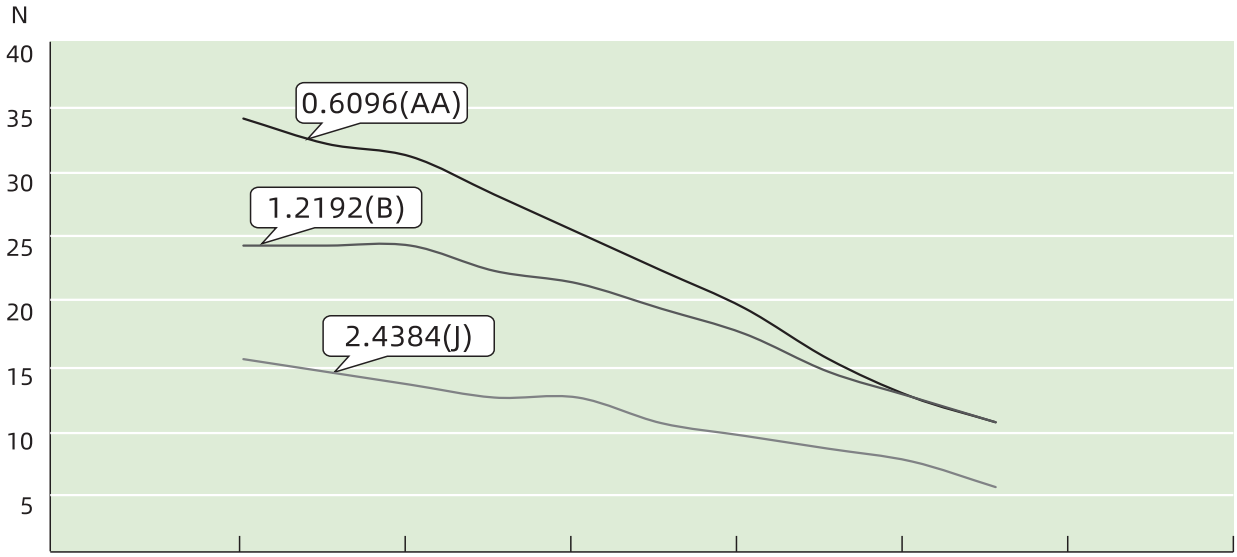

J (mm/s)	10.16	20.32	30.48	40.64	50.8	60.96
B (mm/s)	5.08	10.16	15.24	20.32	25.4	30.48
AA (mm/s)	2.54	5.08	7.62	10.16	12.7	15.24
Speed (r/min)	250	500	750	1000	1250	1500
Pulse (PPS)	200	400	600	800	1000	1200

20PM Bipolar Motor (5V / 15°) Thrust & Speed Curve (24 VDC Constant Current Drive)

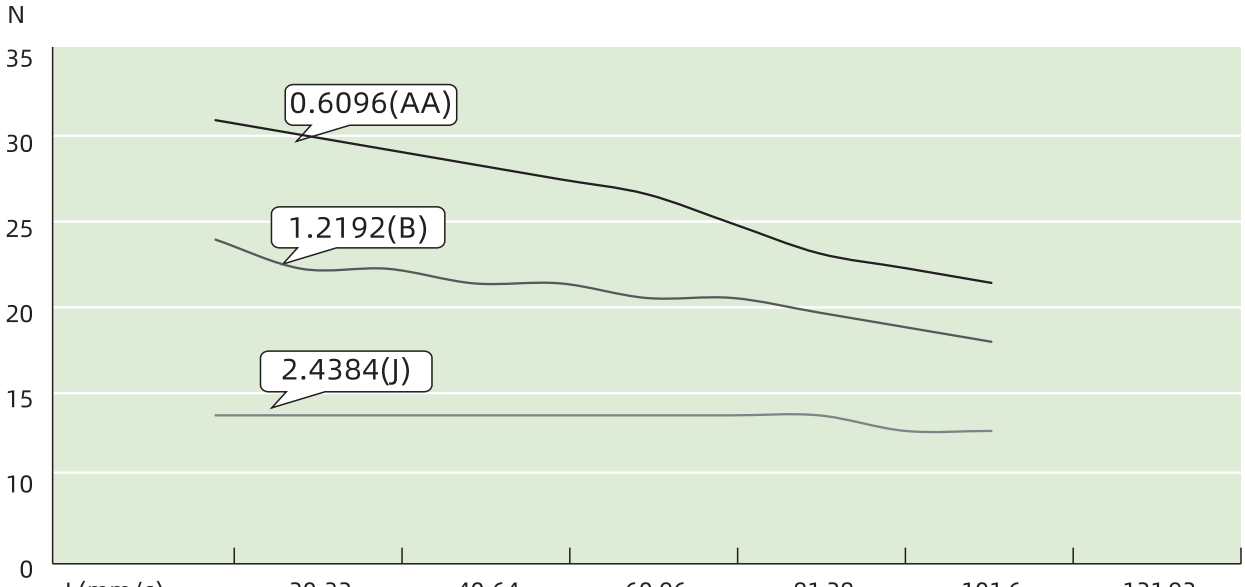

J (mm/s)	20.32	40.64	60.96	81.28	101.6	121.92
B (mm/s)	10.16	20.32	30.48	40.64	50.8	60.96
AA (mm/s)	5.08	10.16	15.24	20.32	25.4	30.48
Speed (r/min)	500	1000	1500	2000	2500	3000
Pulse (PPS)	200	400	600	800	1000	1200

20PM Bipolar Motor (12V / 15°) Thrust & Speed Curve (24 VDC Constant Current Drive)

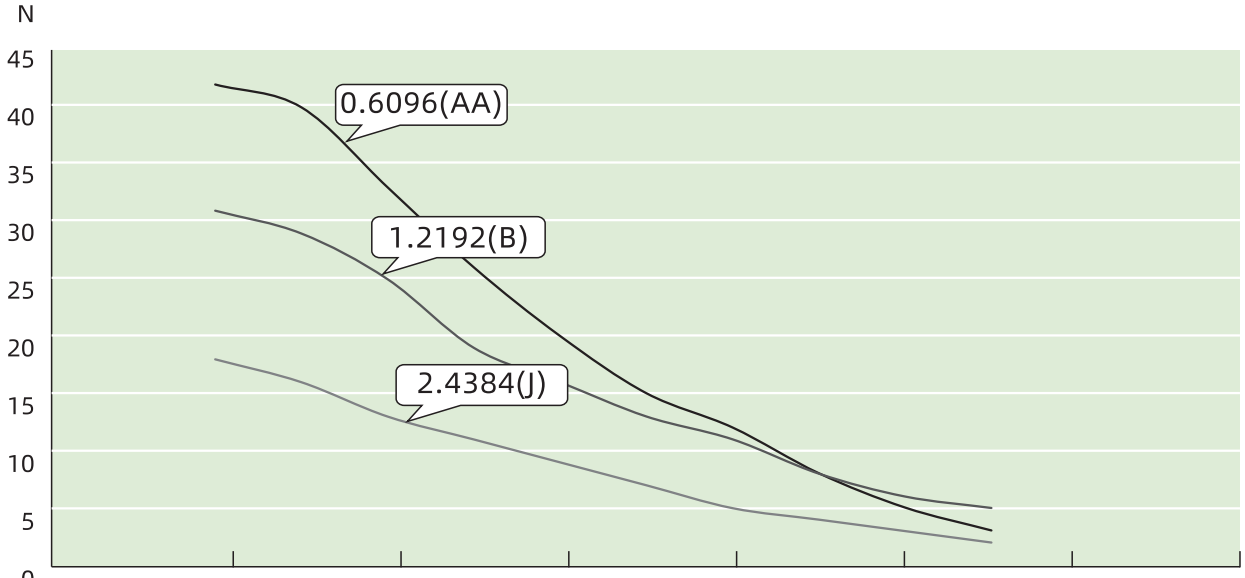

J (mm/s)	20.32	40.64	60.96	81.28	101.6	121.92
B (mm/s)	10.16	20.32	30.48	40.64	50.8	60.96
AA (mm/s)	5.08	10.16	15.24	20.32	25.4	30.48
Speed (r/min)	500	1000	1500	2000	2500	3000
Pulse (PPS)	200	400	600	800	1000	1200

25mm Series

Motor Characteristics

Polarity	Bipolar			
Linear actuator type	External, Non-captive, Kaptive			
Step angle	7.5°		15°	
Winding	5V	12V	5V	12V
Phase current	370mA	160mA	370mA	160mA
Phase resistance	13.5Ω	70Ω	13.5Ω	70Ω
Phase inductance	12.5mH	65mH	9.5mH	47mH
Power consumption	3.85W			
Rotor inertia	1.08gcm²			
Insulation class	B			
Insulation resistance	100MΩ			
Mass	50g			

Available Lead Screw and Travel per Step

Step angle	Screw dia. (mm)	Screw lead		Travel per step		Screw lead code
		mm	inch	mm	inch	
7.5°	Φ3.5	0.3	0.0118	0.00625	0.00025	AF
		0.6096	0.024	0.0127	0.0005	AA
		1.0	0.03937	0.02083	0.00082	AB
		1.2192	0.048	0.0254	0.001	B
		2.0	0.07874	0.04167	0.00164	G
		2.4384	0.096	0.0508	0.002	J
		4.0	0.15748	0.0833	0.00328	M
	Φ4.77	0.635	0.025	0.0132	0.00052	A
		1.27	0.05	0.0265	0.00104	D
		2.54	0.1	0.0529	0.00208	K
15°	Φ3.5	0.3	0.0118	0.0125	0.00049	AF
		0.6096	0.024	0.0254	0.001	AA
		1.0	0.03937	0.0417	0.00164	AB
		1.2192	0.048	0.0508	0.002	B
		2.0	0.07874	0.0833	0.00328	G
		2.4384	0.096	0.1016	0.004	J
		4.0	0.15748	0.1667	0.00656	M
	Φ4.77	0.635	0.025	0.0265	0.00104	A
		1.27	0.05	0.0529	0.00208	D
		2.54	0.1	0.1058	0.00417	K

Dimensional Drawings

- **External**

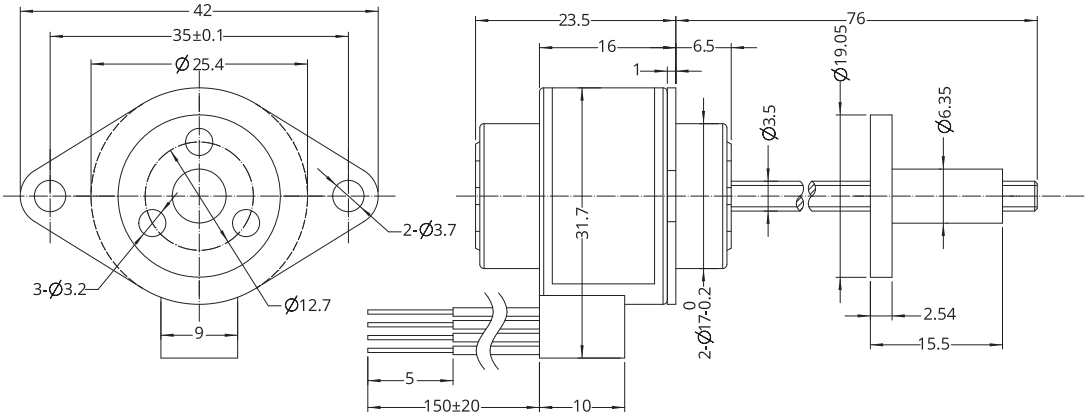

- **Non-captive**

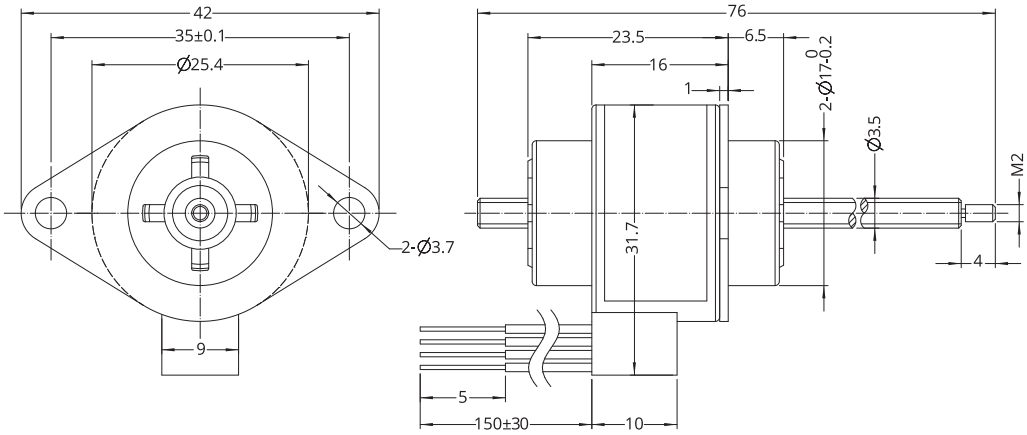

- **Kaptive**

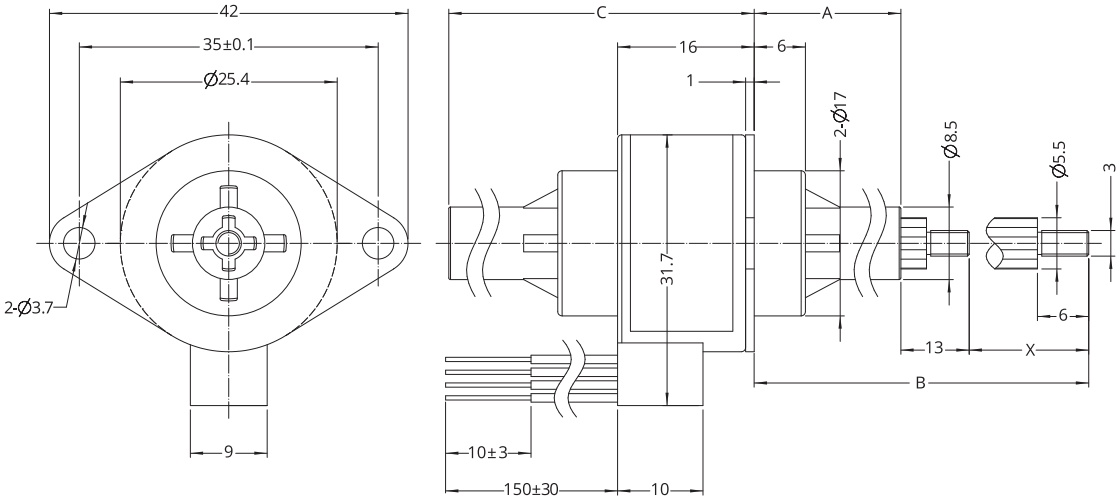

Stroke X	Front extension A	Total extension B	Body length C (Max.)
13	10.5±0.25	36.5	27.5
18	15.5±0.25	46.5	32.5
25	22.5±0.25	60.5	39.5
31	28.5±0.25	72.5	45.5

Note : All drawings are 1st-angle projection - ISO Compliant (3D models available)

25mm Series

Speed Thrust Curves

25PM Bipolar Motor (5V / 7.5°) Thrust & Speed Curve (24 VDC Constant Current Drive)

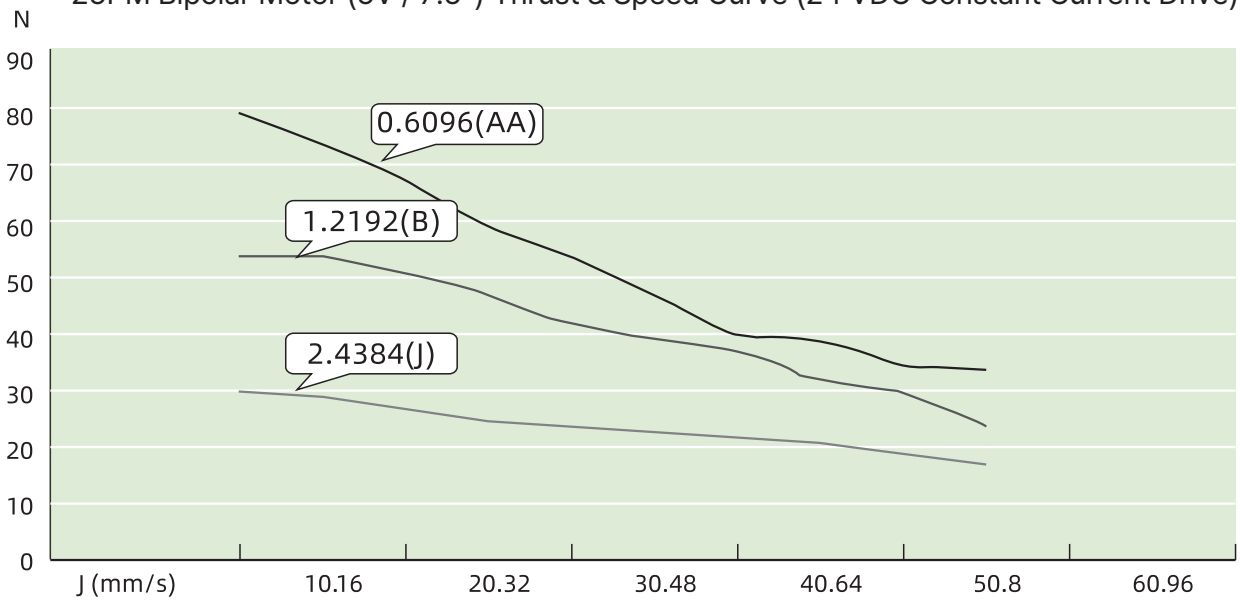

J (mm/s)	10.16	20.32	30.48	40.64	50.8	60.96
B (mm/s)	5.08	10.16	15.24	20.32	25.4	30.48
AA (mm/s)	2.54	5.08	7.62	10.16	12.7	15.24
Speed (r/min)	250	500	750	1000	1250	1500
Pulse (PPS)	200	400	600	800	1000	1200

25PM Bipolar Motor (12V / 7.5°) Thrust & Speed Curve (24 VDC Constant Current Drive)

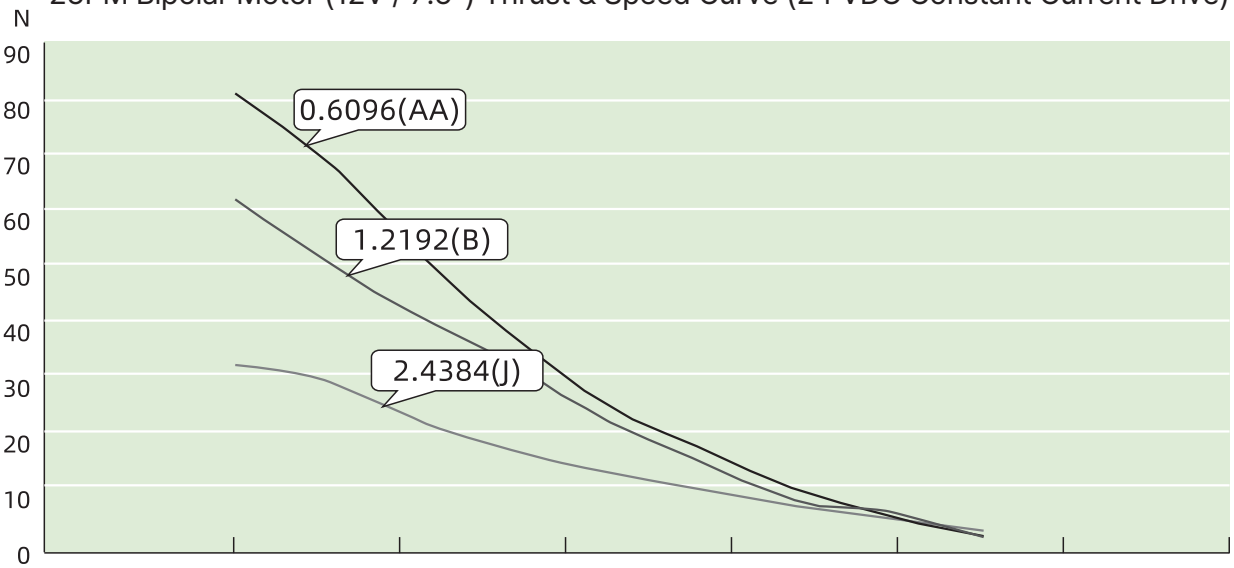

J (mm/s)	10.16	20.32	30.48	40.64	50.8	60.96
B (mm/s)	5.08	10.16	15.24	20.32	25.4	30.48
AA (mm/s)	2.54	5.08	7.62	10.16	12.7	15.24
Speed (r/min)	250	500	750	1000	1250	1500
Pulse (PPS)	200	400	600	800	1000	1200

25PM Bipolar Motor (5V / 15°) Thrust & Speed Curve (24 VDC Constant Current Drive)

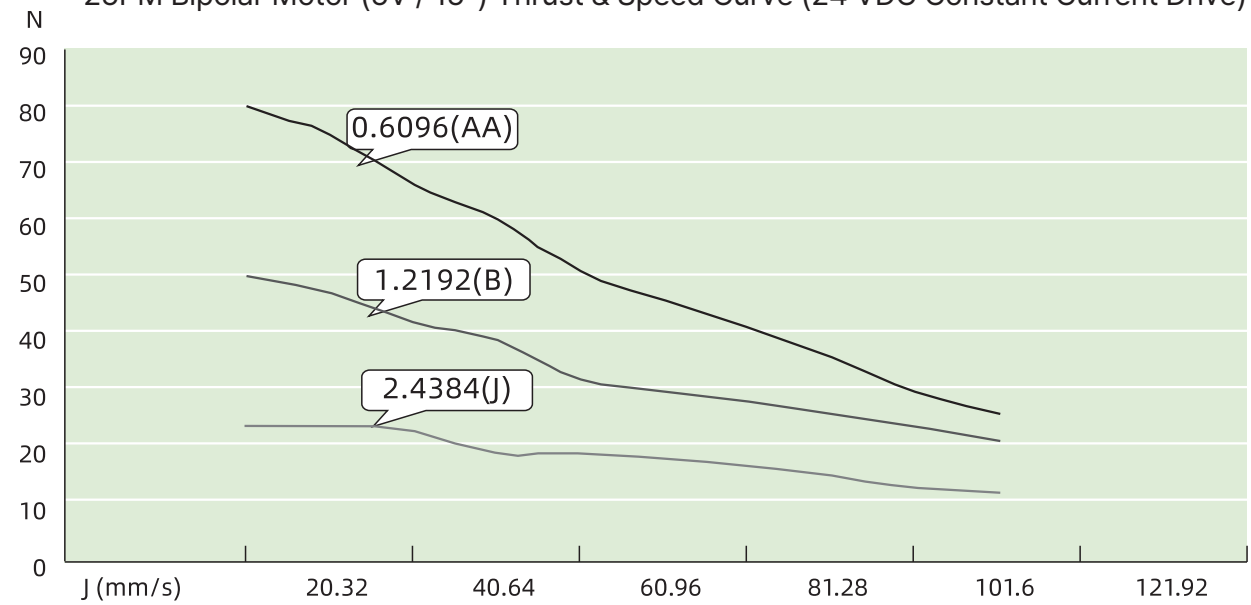

J (mm/s)	20.32	40.64	60.96	81.28	101.6	121.92
B (mm/s)	10.16	20.32	30.48	40.64	50.8	60.96
AA (mm/s)	5.08	10.16	15.24	20.32	25.4	30.48
Speed (r/min)	500	1000	1500	2000	2500	3000
Pulse (PPS)	200	400	600	800	1000	1200

25PM Bipolar Motor (12V / 15°) Thrust & Speed Curve (24 VDC Constant Current Drive)

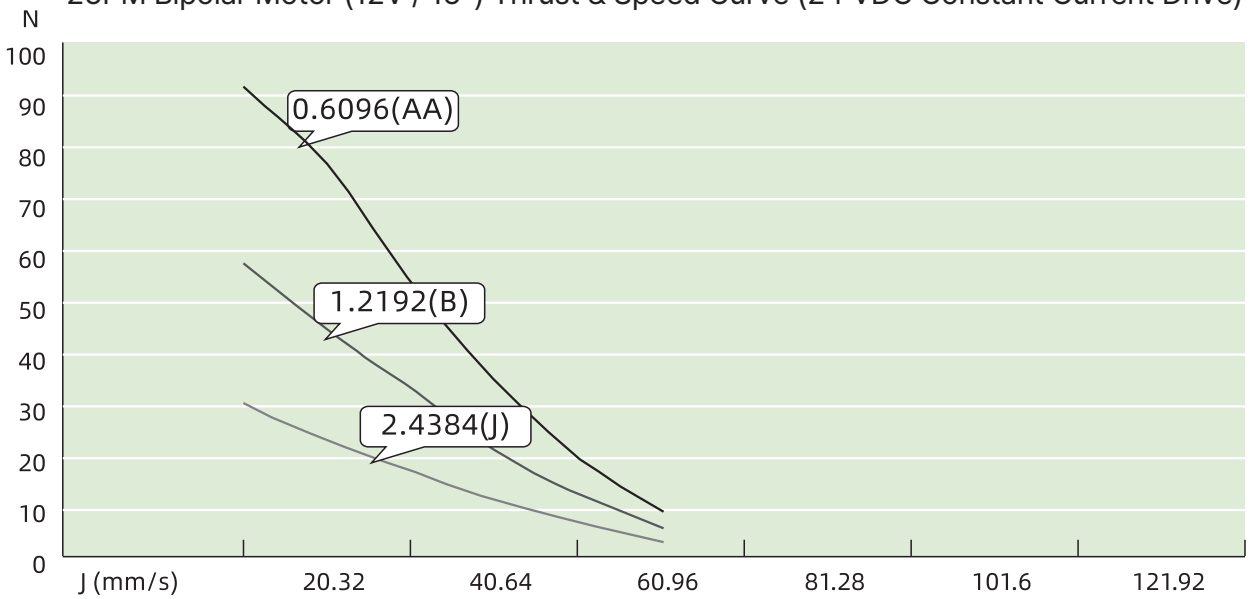

J (mm/s)	20.32	40.64	60.96	81.28	101.6	121.92
B (mm/s)	10.16	20.32	30.48	40.64	50.8	60.96
AA (mm/s)	5.08	10.16	15.24	20.32	25.4	30.48
Speed (r/min)	500	1000	1500	2000	2500	3000
Pulse (PPS)	200	400	600	800	1000	1200

36mm Series

Motor Characteristics

Polarity	Bipolar			
Linear actuator type	External, Non-captive, Kaptive			
Step angle	7.5°		15°	
Winding	5V	12V	5V	12V
Phase current	560mA	230mA	560mA	230mA
Phase resistance	9Ω	52Ω	9Ω	52Ω
Phase inductance	11.5mH	72mH	8mH	56mH
Power consumption	5.6W			
Rotor inertia	8.5gcm²			
Insulation class	B			
Insulation resistance	100MΩ			
Mass	120g			

Available Lead Screw and Travel per Step

Step angle	Screw dia. (mm)	Screw lead		Travel per step		Screw lead code
		mm	inch	mm	inch	
7.5°	Φ4.77	0.635	0.025	0.0132	0.00052	A
		1.27	0.05	0.0265	0.00104	D
		2.54	0.1	0.0529	0.00208	K
	Φ6.35	0.6096	0.024	0.0127	0.0005	AA
		1.2192	0.048	0.0254	0.001	B
		2.4384	0.096	0.0508	0.002	J
15°	Φ4.77	0.635	0.025	0.0265	0.00104	A
		1.27	0.05	0.0529	0.00208	D
		2.54	0.1	0.1058	0.00417	K
	Φ6.35	0.6096	0.024	0.0254	0.001	AA
		1.2192	0.048	0.0508	0.002	B
		2.4384	0.096	0.1016	0.004	J

Dimensional Drawings

- External

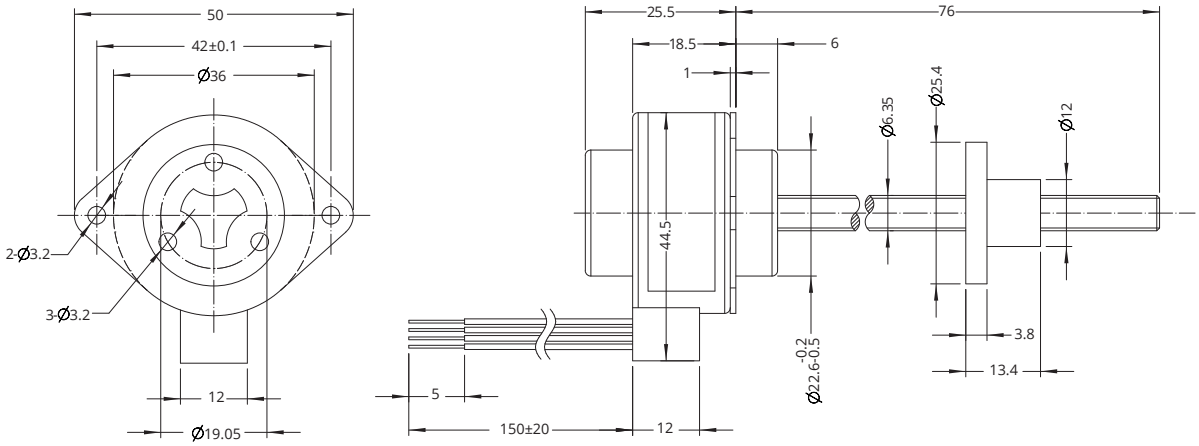

- Non-captive

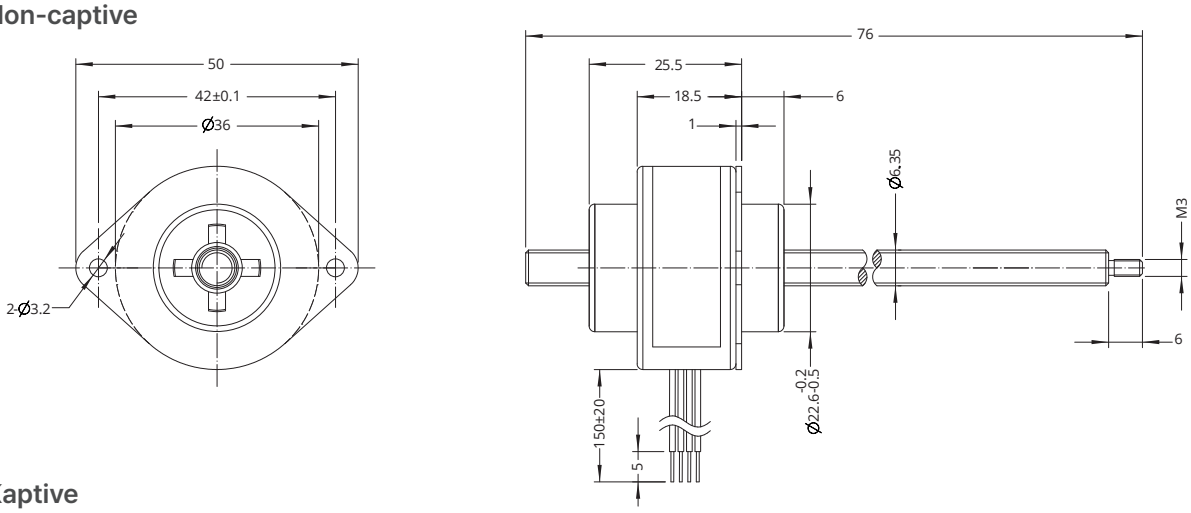

- Kaptive

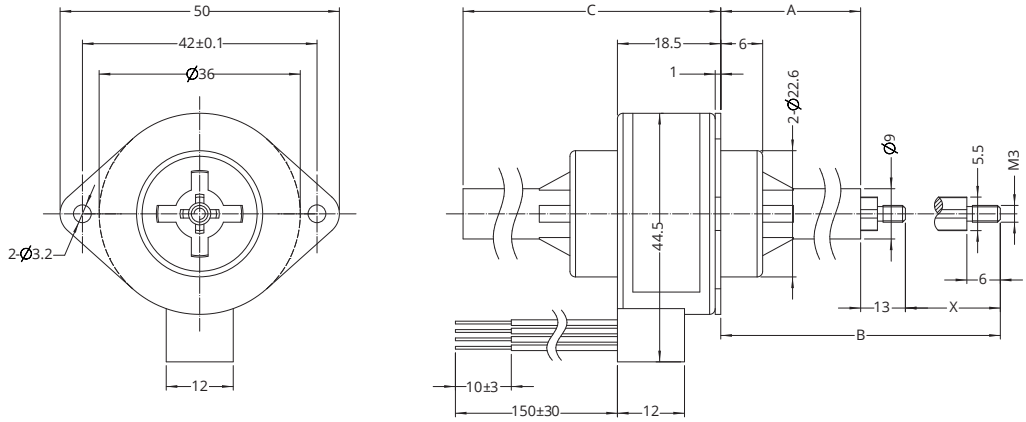

Stroke X	Front extension A	Total extension B	Body length C (Max.)
16	12±0.25	41	31.5
25	21±0.25	59	40.5
38	34±0.25	85	53.5

Note : All drawings are 1st-angle projection - ISO Compliant (3D models available)

36mm Series

Speed Thrust Curves

36PM Bipolar Motor (5V / 7.5°) Thrust & Speed Curve (24 VDC Constant Current Drive)

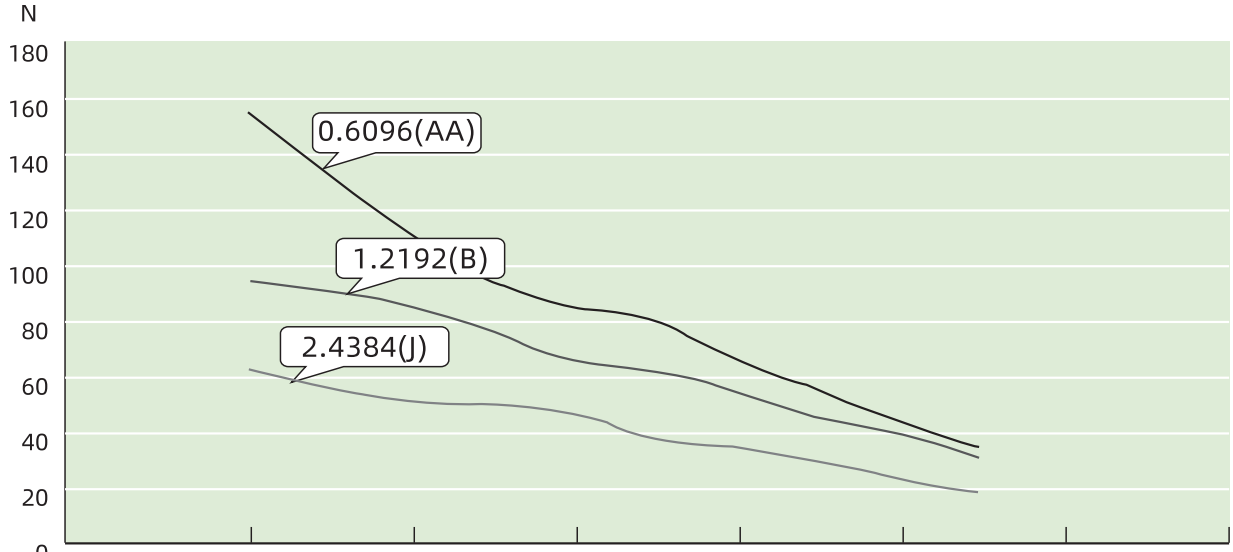

J (mm/s)	10.16	20.32	30.48	40.64	50.8	60.96
B (mm/s)	5.08	10.16	15.24	20.32	25.4	30.48
AA (mm/s)	2.54	5.08	7.62	10.16	12.7	15.24
Speed (r/min)	250	500	750	1000	1250	1500
Pulse (PPS)	200	400	600	800	1000	1200

36PM Bipolar Motor (12V / 7.5°) Thrust & Speed Curve (24 VDC Constant Current Drive)

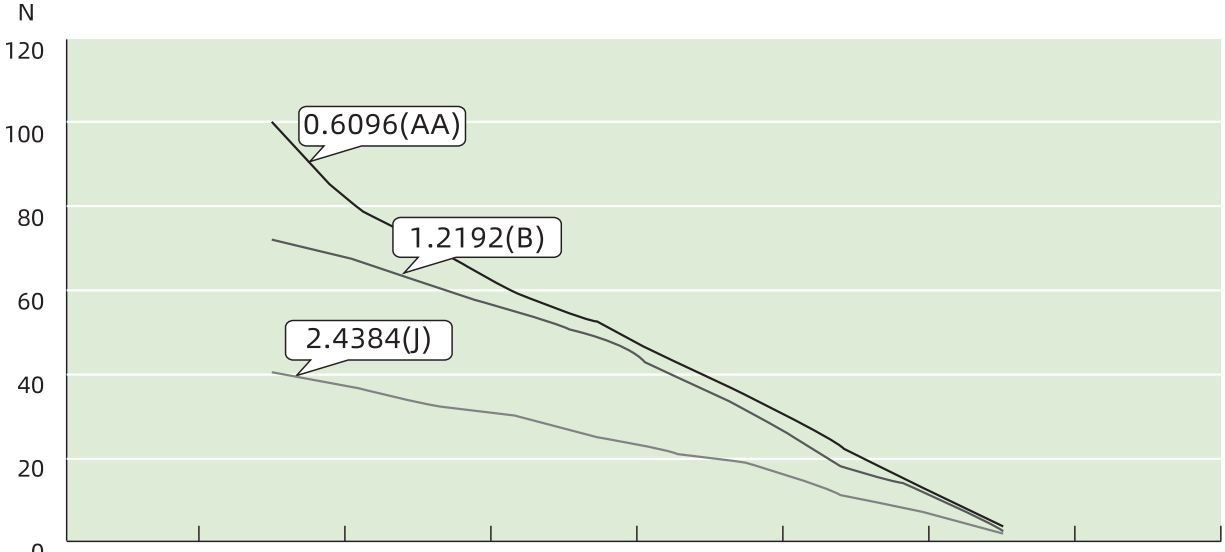

J (mm/s)	5.08	10.16	15.24	20.32	25.4	30.48	35.56
B (mm/s)	2.54	5.08	7.62	10.16	12.7	15.24	17.78
AA (mm/s)	1.27	2.54	3.81	5.08	6.35	7.62	8.89
Speed (r/min)	125	250	375	500	625	750	875
Pulse (PPS)	100	200	300	400	500	600	700

36PM Bipolar Motor (5V / 15°) Thrust & Speed Curve (24 VDC Constant Current Drive)

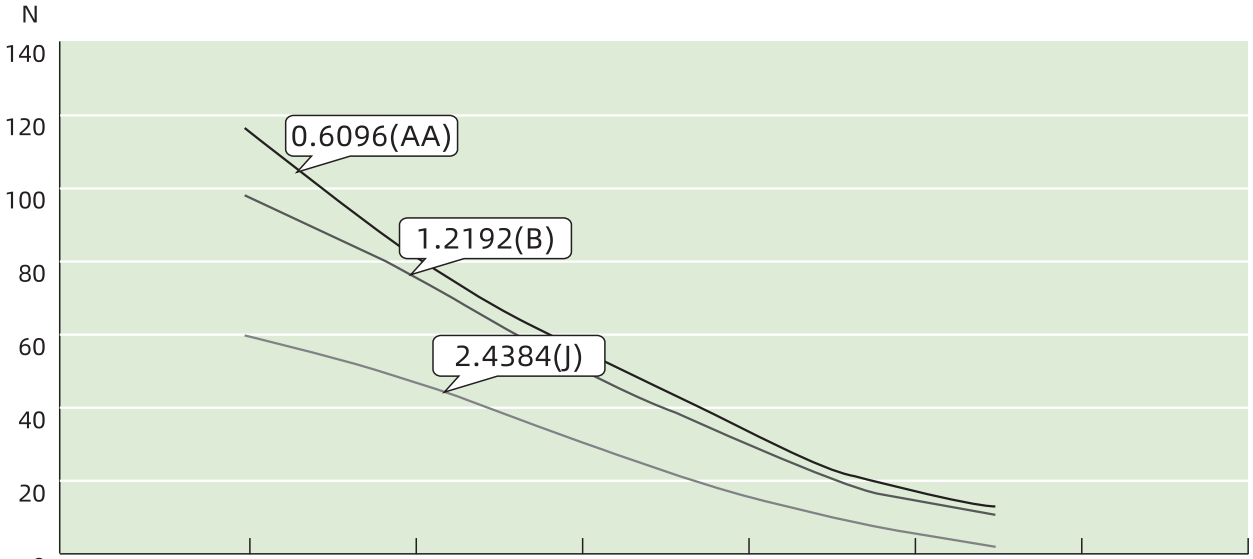

J (mm/s)	10.16	20.32	30.48	40.64	50.8	60.96
B (mm/s)	5.08	10.16	15.24	20.32	25.4	30.48
AA (mm/s)	2.54	5.08	7.62	10.16	12.7	15.24
Speed (r/min)	250	500	750	1000	1250	1500
Pulse (PPS)	200	400	600	800	1000	1200

36PM Bipolar Motor (12V / 15°) Thrust & Speed Curve (24 VDC Constant Current Drive)

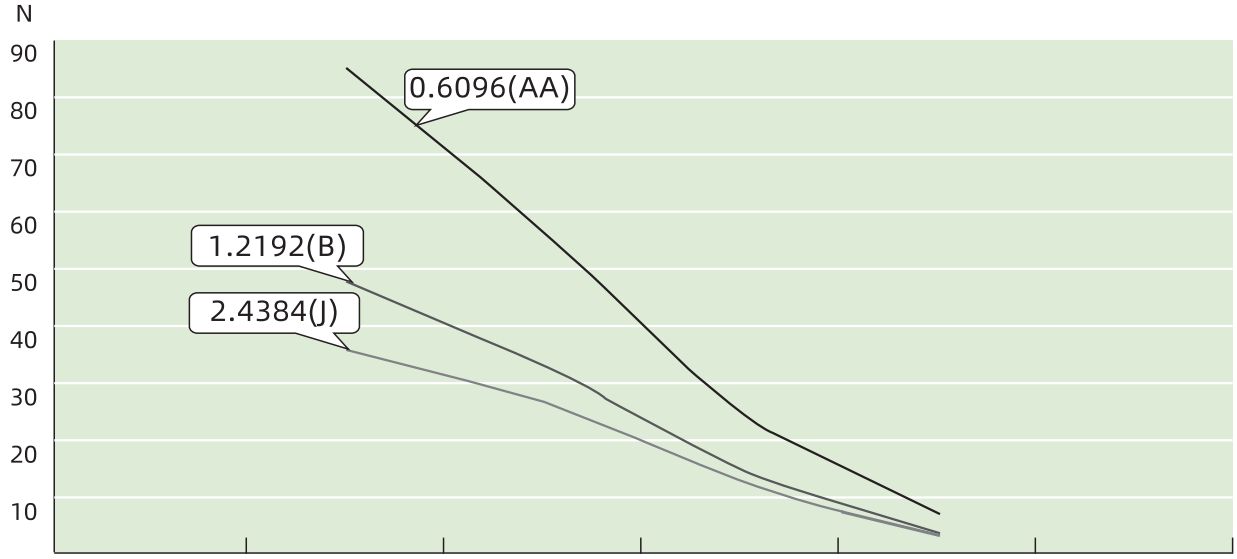

J (mm/s)	5.08	10.16	15.24	20.32	25.4
B (mm/s)	2.54	5.08	7.62	10.16	12.7
AA (mm/s)	1.27	2.54	3.81	5.08	6.35
Speed (r/min)	250	500	750	1000	1250
Pulse (PPS)	100	200	300	400	500

46mm Series

Motor Characteristics

Polarity	Bipolar	
Linear actuator type	External, Kaptive	
Step angle	7.5°	
Winding	5V	12V
Phase current	1000mA	410mA
Phase resistance	5Ω	29Ω
Phase inductance	9mH	52mH
Power consumption	10W	
Rotor inertia	13gcm²	
Insulation class	B	
Insulation resistance	100MΩ	
Mass	250g	

Available Lead Screw and Travel per Step

Step angle	Screw dia. (mm)	Screw lead		Travel per step		Screw lead code
		mm	inch	mm	inch	
7.5°	Φ6.35	0.6096	0.024	0.0127	0.0005	AA
		1.2192	0.048	0.0254	0.001	B
		2.4384	0.096	0.0508	0.002	J

46mm Series

Dimensional Drawings

External

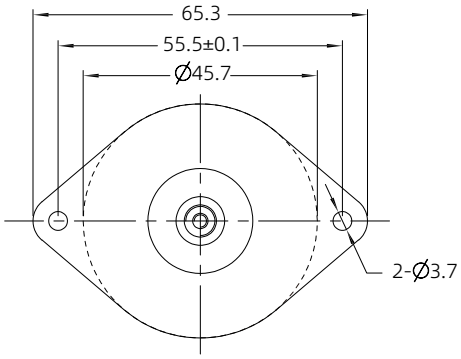

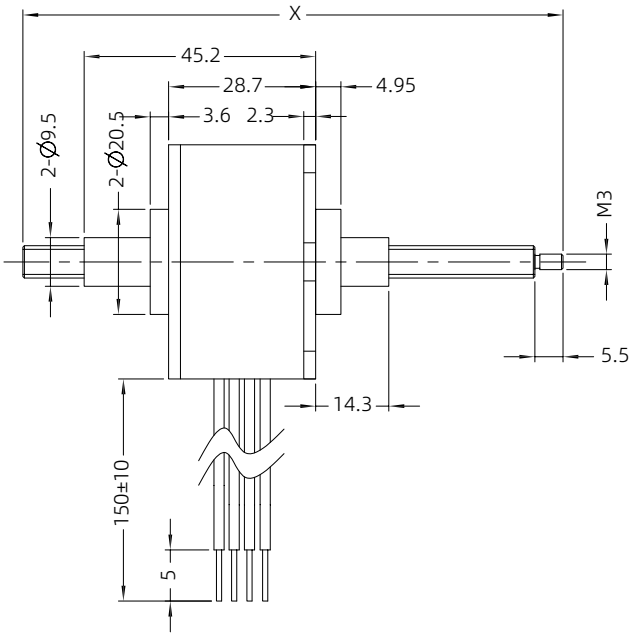

Kaptive

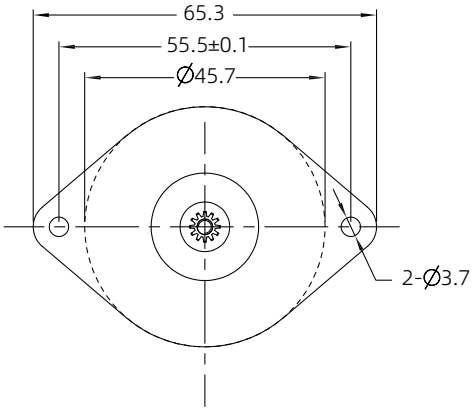

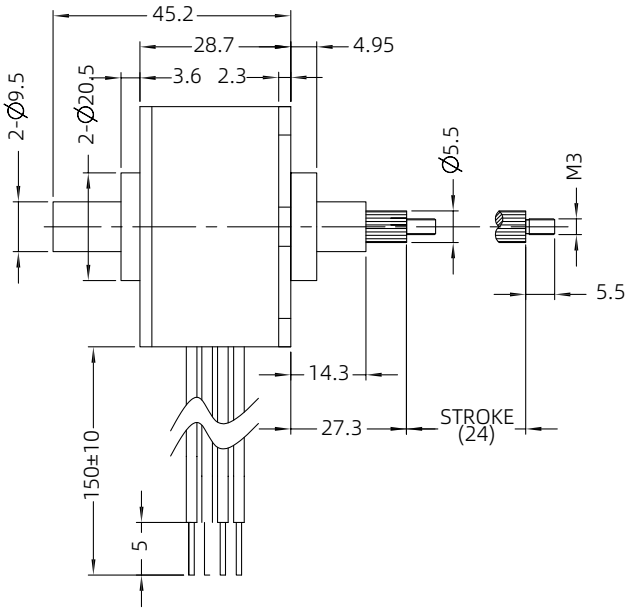

Note : All drawings are 1st-angle projection - ISO Compliant (3D models available)

46mm Series

Speed Thrust Curves

46mm bi-polar (5V/7.5°) under 24 VDC chopper drive

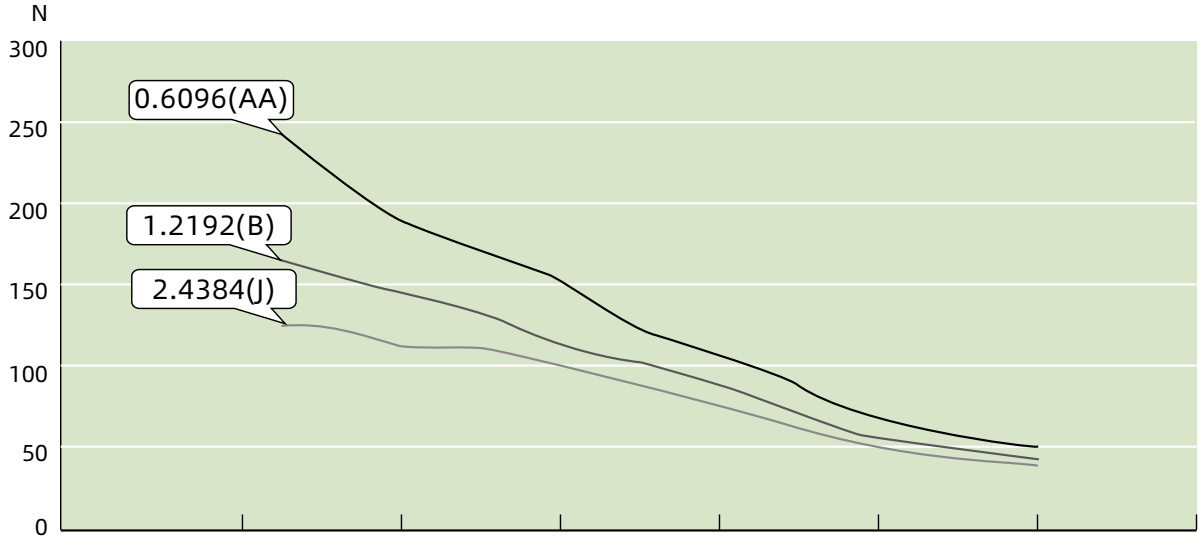

J (mm/s)	10	20.2	30.4	40.8	50.8	60.8
B (mm/s)	5	10.2	15.2	20.4	25.4	30.4
AA (mm/s)	2.5	5.1	7.6	10.2	12.7	15.2
Speed r/Min	250	500	750	1000	1250	1500
Pulse PPS	200	400	600	800	1000	1200

46mm bi-polar (12V/7.5°) under 24 VDC chopper drive

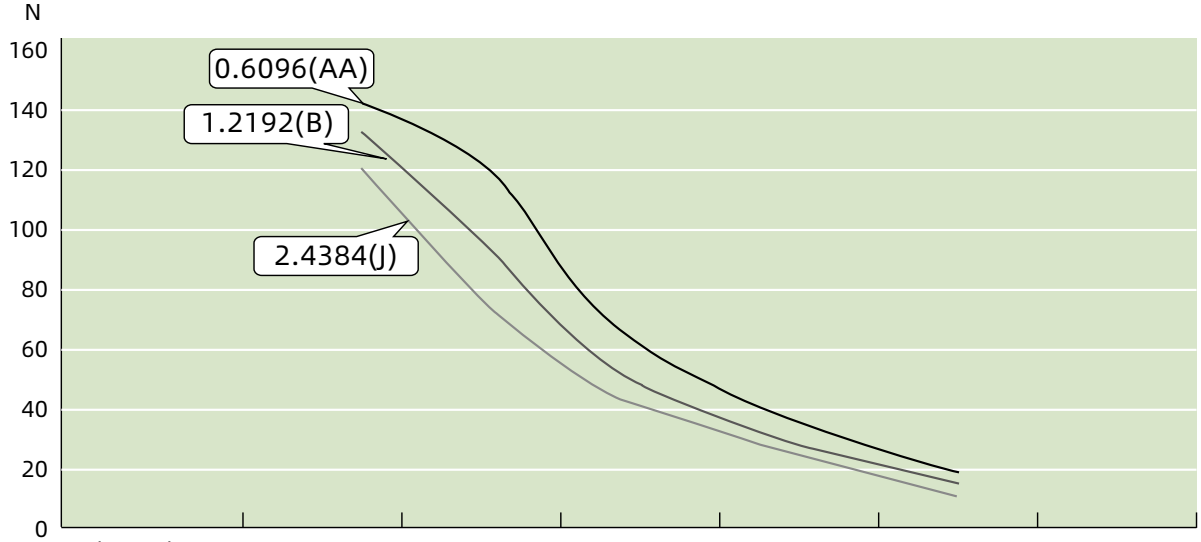

J (mm/s)	20	40.4	60.8	81.6	101.6	121.6
B (mm/s)	10	20.4	30.4	40.8	50.8	60.8
AA (mm/s)	5	10.2	15.2	20.4	25.4	30.4
Speed r/Min	500	1000	1500	2000	2500	3000
Pulse PPS	200	400	600	800	1000	1200

B Hybrid Rotary Stepper Motor

DINGS' hybrid stepper motors offer high precision and high reliability, and are designed to flexibly support a wide range of motion control applications. The lineup includes both 2-phase and 5-phase models, offering diverse options to meet various customer requirements.

The 2-phase hybrid stepper motors are known for their robust performance, versatility, and cost-effectiveness, making them suitable for a wide variety of general automation tasks.

5-phase hybrid stepper motors provide smoother operation, lower vibration, and higher positioning accuracy, making them suitable for high-precision applications.

Part number construction	B-2
2-phase hybrid rotart stepper motor	B-3
5-phase hybrid rotart stepper motor	B-25
Accessories and options	B-33

Part Number Construction

17	H	2	061	-	120	-	4	B	T	-	GR	-	01
①	②	③	④		⑤		⑥	⑦	⑧		⑨		⑩

① Motor Size

Motor Size (mm)	14	20	28	35	42	57	60	86
Motor Size (NEMA)	6	8	11	14	17	23	24	34

② Basic Structure

H = Normal

P = IP54

W = External pilot

*For IP65, please contact DINGS' for more information

③ Motor Step Angle (°)

1 = 3°

2 = 1.8°

3 = 1.2°

4 = 0.9°

5 = 0.72°

6 = 0.36°

④ Motor Length (mm)

⑤ Rated Current

XXX = Rated current ×100 (A)

⑥ Number of Wires (3,4,5,6,8)

⑦ Shaft Configuration

A = Single shaft

B = Dual shaft

* Shaft dimension and D-Cut customization, please contact DINGS'

⑧ Wiring Method

L = Lead wire

T = Pin connector

C = Cable

* If customer has special requirement for connector and cable, please inform DINGS'

⑨ Option

GR = Planetary gearbox ready

BR = Brake ready

ER = Encoder ready

PG = Planetary gearbox

Gearbox part number with gear ratio

DG = DINGS' gearbox

FB = Power off brake, NB = Power on brake

EKX = Encoder [X = Encoder Resolution]

- DINGS' can customize shafts and covers to be ready to assemble Gearbox, Brake or Encoder by customers, according to customer's requirements by drawing.
- DINGS' has standard planetary gearbox options. Please see product details.
- Power-Off Brake is available for Motor size 28, 35, 42, 57 and 60mm

⑪ Customer Sequence Number

Example

Naming code	17H2061-120-4BT-GR-01
Description	Size 42 mm Normal structure Step angle 1.8° Motor body length 61 mm Rated current 1.2 A 4-wire leads Dual shaft Wiring method integrated connector Gearbox ready Customization sequence code 01

2-Phase Hybrid Rotary Stepper Motor

DINGS' provides 8 different sizes of hybrid stepper motors from 14 mm to 86 mm. Each size has multiple stack lengths. Single or dual shaft is standard but customized shaft options are also available. DINGS' can customize the entire range of hybrid stepper motors as encoder ready for general motion solution providers and also encoder housing, special machining of front and rear shafts, special cables, wire harness assemblies and other solutions are available. According to customer's requirements, we can integrate various gearboxes, encoders, connectors and cables too. In addition, various ratio of planetary gearboxes, DINGS' standard encoders and power-off brakes (NEMA 11, 14, 17, 23 and 24), IP Protection is optional.

Product overview	B-4
6 · 14 mm	B-5
8 · 20 mm	B-7
11 · 28 mm	B-9
14 · 35 mm	B-11
17 · 42 mm	B-13
23 · 57 mm	B-16
24 · 60 mm	B-20
34 · 86 mm	B-23

Product Overview

Part Number	Current (A [RMS])	Resistance (Ω)	Inductance (mH)	Holding Torque (N·m)	Rotor Inertia (g·cm²)	Motor Length (mm)	Mass (g)
6H2030	0.25	23	4.5	0.005	1.5	32	35
8H2028	0.5	5.1	1.5	0.014	2.7	27	60
8H2038	0.5	8.8	2.7	0.02	3.3	38.2	80
11H2033	1	2.1	1.2	0.06	9	33.35	110
11H2045	1	4.1	3.2	0.1	13	45	200
11H2052	1	4.7	3.9	0.14	18	52	280
14H2027	0.5	10.3	5.9	0.1	12	26.5	150
14H2037	1.5	1.7	1.4	0.2	20	37.25	210
14H2052	1.5	2.7	2.8	0.4	35	53.5	250
17H2031	1.2	1.7	2.3	0.16	23	30.1	200
17H2034	1.2	2.1	2.7	0.25	25	34.1	230
17H2041	1.2	2.4	4.7	0.4	54	40.1	300
17H2049	2	1.3	2	0.48	77	48.1	360
17H2061	2	1.7	3.6	0.72	110	60.1	500
23H2042	1	4.2	9	0.6	140	41	460
23H2045	1	4.5	12	0.8	180	44	520
23H2051	2	1.5	4.4	1	240	51	640
23H2055	2	1.6	5.2	1.2	280	54	720
23H2065	3	0.9	2.7	1.6	350	64	860
23H2076	4	0.6	2.4	2	480	75	1060
23H2100	5	0.46	2.3	3	720	100	1500
24H2047	2	1.5	3.4	1	240	47	600
24H2056	3	0.8	2.3	1.5	340	56	800
24H2068	4	0.6	1.9	2.1	490	68	1000
24H2085	5	0.4	1.8	3	690	85	1300
34H2060	3	1	6	3	1100	60	1600
34H2075	4.5	0.6	4.2	4.5	1800	75	2100
34H2098	6	0.5	4	7	2800	98	2900

[2-phase] Size 6 (14mm) Series

The size 6 [14mm] Hybrid Rotary Stepper Motor from DINGS' has a maximum holding torque of 0.005 N·m.

Parameters

General			
Accuracy	Step angle	1.8°±5%	
	Resistance	±10% @ 20°C	
	Inductance	±20% @ 1 kHz	
Insulation class		B	
Duty type		S1	
Dielectric strength		250 VAC / 1 KHz / 1 mA / 1 s	
Insulation resistance		100 MΩ / 500 VDC	
Permissible radial load (5mm distance from mounting surface)	Permissible radial load (10mm distance from mounting surface)	Permissible radial load (15mm distance from mounting surface)	Permissible radial load (20mm distance from mounting surface)
15N	12N	8N	6N

Parameter							
Type	Current (A [RMS])	Resistance (Ω)	Inductance (mH)	Holding Torque (N·m)	Rotor Inertia (g·cm²)	Length (mm)	Mass (g)
6H2030	0.25	23	4.5	0.005	1.5	32	35

Material	
End bell	Aluminum alloy
Bearing	Deep groove ball bearing
Magnet	Sintered NdFeB
Shaft	Stainless steel
Wiring	UL 3135,30 AWG

Dimensional Drawings

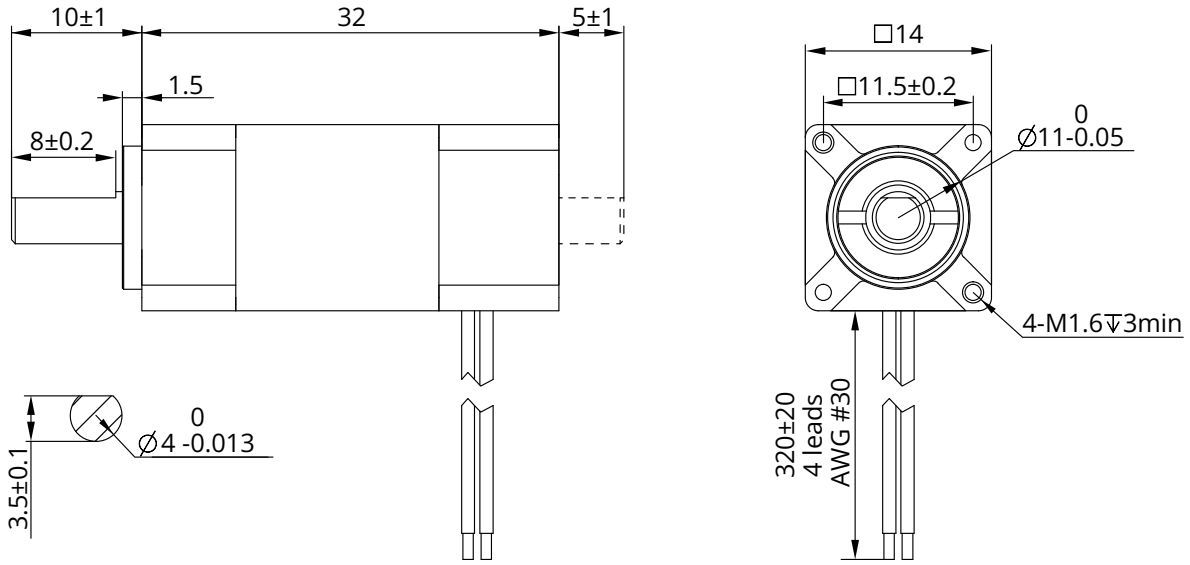

Note : All drawings are 1st-angle projection - ISO Compliant (3D models available)

[2-phase] Size 6 (14mm) Series

Torque Performance Curves

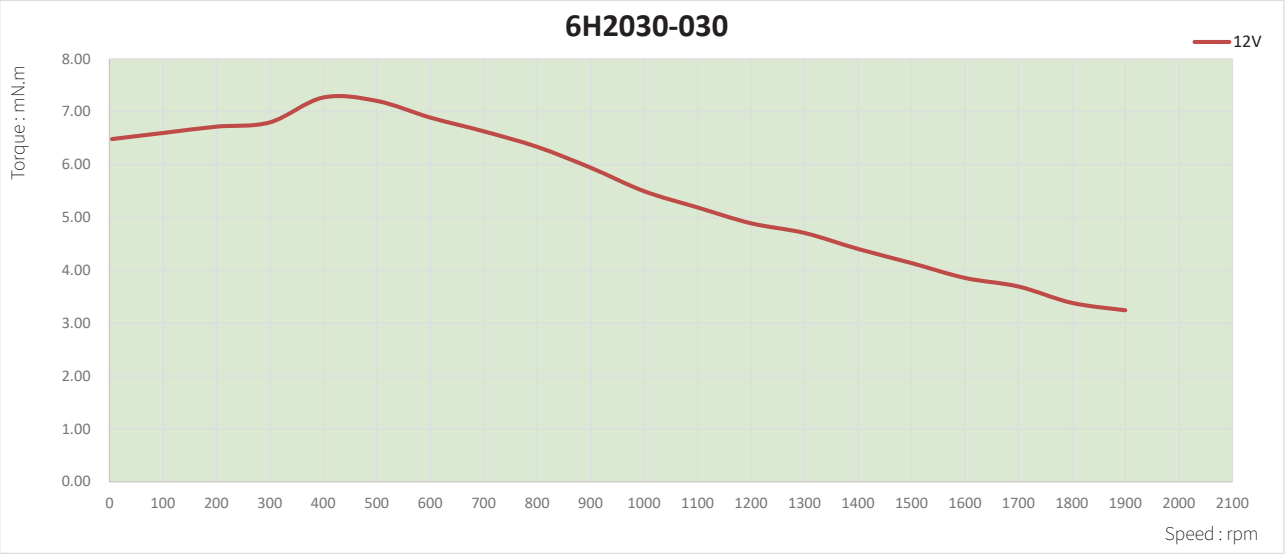

[2-phase] Size 8 (20mm) Series

The size 8 [20mm] Hybrid Rotary Stepper Motor has Max. 0.02N·m of holding torque.
Encoders and 22mm frame planetary gearbox solutions are available.
For special windings or customization, please contact DINGS' for further information.

Parameters

General			
Accuracy	Step angle	1.8°±5%	
	Resistance	±10% @ 20°C	
	Inductance	±20% @ 1 kHz	
Insulation class		B	
Duty type		S1	
Dielectric strength		500 VAC / 1 KHz / 1 mA / 1 s	
Insulation resistance		100 MΩ / 500 VDC	
Permissible radial load (5mm distance from mounting surface)	Permissible radial load (10mm distance from mounting surface)	Permissible radial load (15mm distance from mounting surface)	Permissible radial load (20mm distance from mounting surface)
15N	12N	8N	6N

Parameter							
Type	Current (A [RMS])	Resistance (Ω)	Inductance (mH)	Holding Torque (N·m)	Rotor Inertia (g·cm²)	Length (mm)	Mass (g)
8H2028	0.5	5.1	1.5	0.014	2.7	27	60
8H2038	0.5	8.8	2.7	0.02	3.3	38.2	80

Material	
End bell	Aluminum alloy
Bearing	Deep groove ball bearing
Magnet	Sintered NdFeB
Shaft	Stainless steel
Wiring	UL 3265, 28AWG

Dimensional Drawings

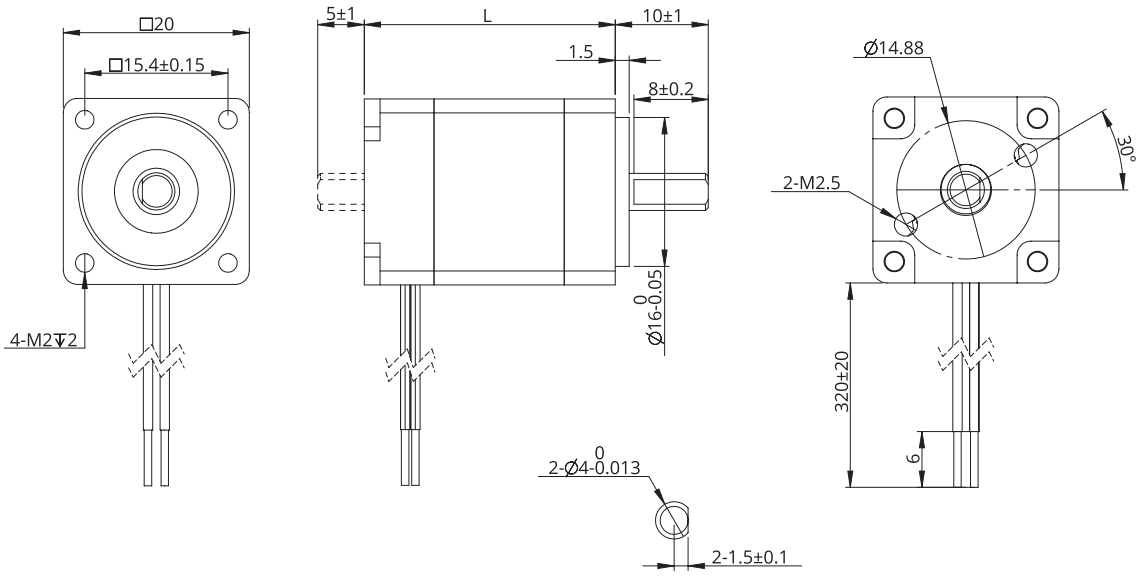

Note : All drawings are 1st-angle projection - ISO Compliant (3D models available)

[2-phase] Size 8 (20mm) Series

Torque Performance Curves

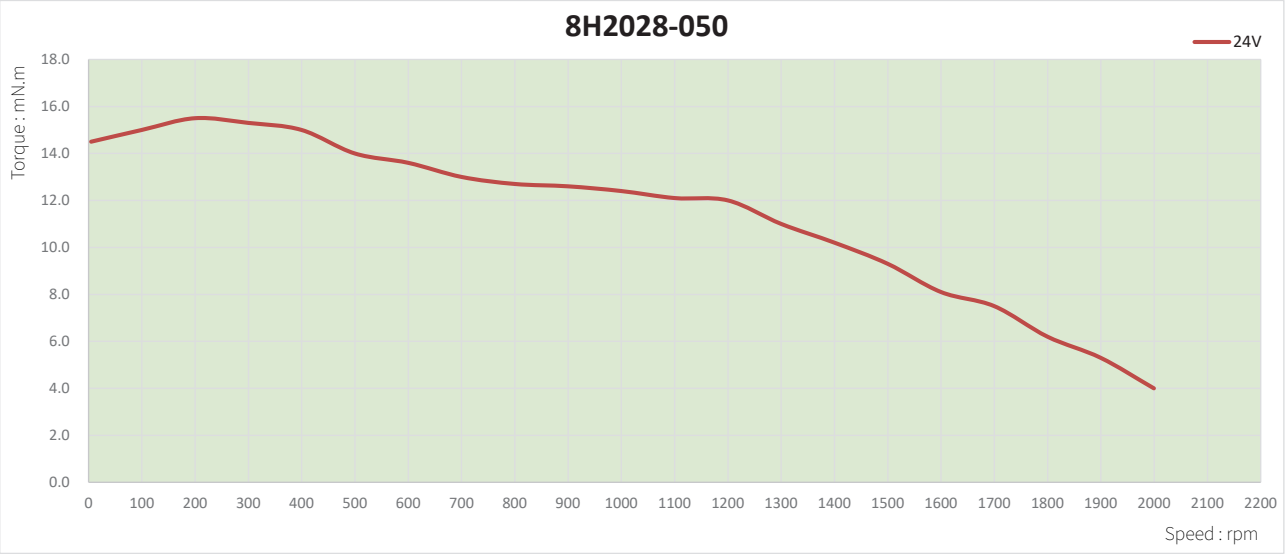

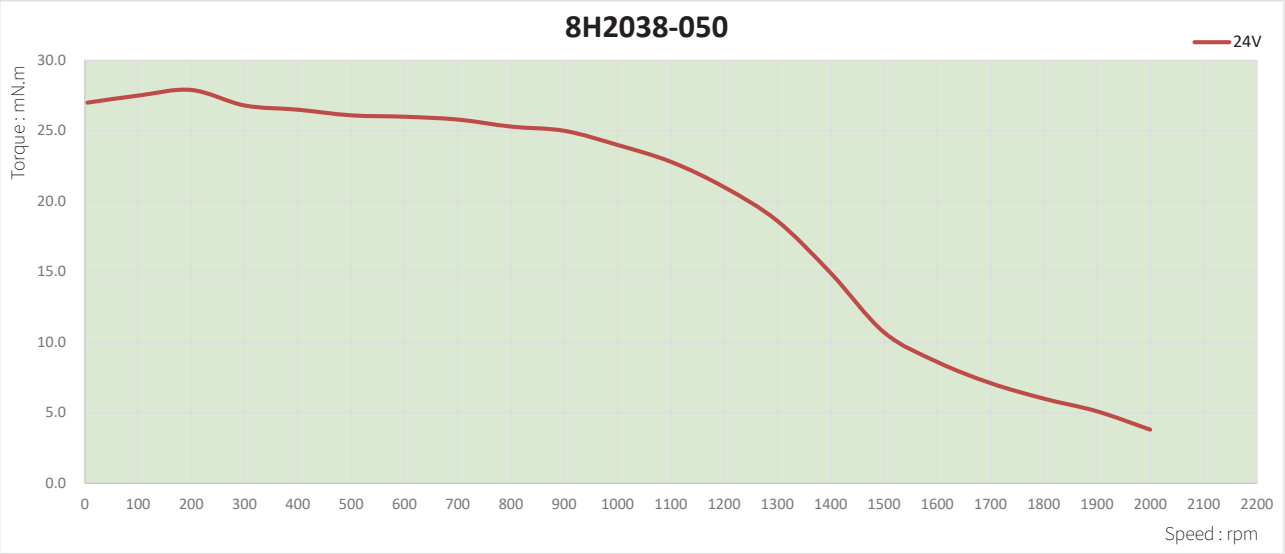

[2-phase] Size 11 (28mm) Series

The size 11 [28mm] Hybrid Rotary Stepper Motor has Max. 0.14N·m of holding torque.
Encoders and 28mm frame planetary gearbox solutions are available.
For special windings or customization, please contact DINGS' for further information.

Parameters

General			
Accuracy	Step angle	1.8°±5%	
	Resistance	±10% @ 20°C	
	Inductance	±20% @ 1 kHz	
Insulation class		B	
Duty type		S1	
Dielectric strength		500 VAC / 1 KHz / 1 mA / 1 s	
Insulation resistance		100 MΩ / 500 VDC	
Permissible radial load (5mm distance from mounting surface)	Permissible radial load (10mm distance from mounting surface)	Permissible radial load (15mm distance from mounting surface)	Permissible radial load (20mm distance from mounting surface)
50N	35N	25N	20N

Parameter							
Type	Current (A [RMS])	Resistance (Ω)	Inductance (mH)	Holding Torque (N·m)	Rotor Inertia (g·cm²)	Length (mm)	Mass (g)
11H2033	1	2.1	1.2	0.06	9	33.35	110
11H2045	1	4.1	3.2	0.1	13	45	200
11H2052	1	4.7	3.9	0.14	18	52	280

Material	
End bell	Aluminum alloy
Bearing	Deep groove ball bearing
Magnet	Sintered NdFeB
Shaft	Stainless steel
Wiring	UL 3265, 26AWG

Dimensional Drawings

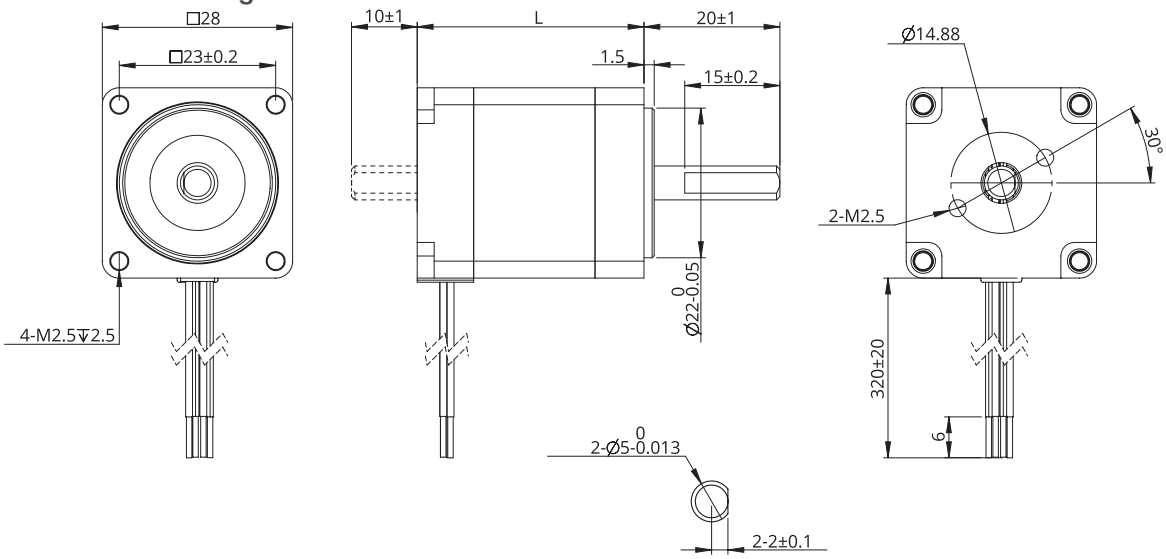

Note : All drawings are 1st-angle projection - ISO Compliant (3D models available)

[2-phase] Size 11 (28mm) Series

Torque Performance Curves

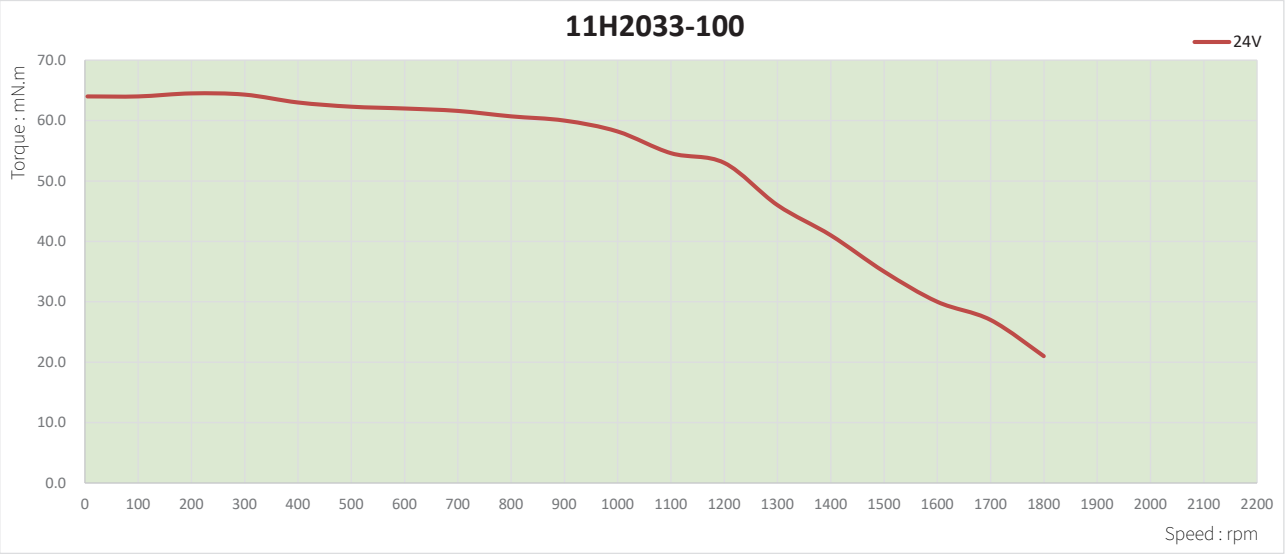

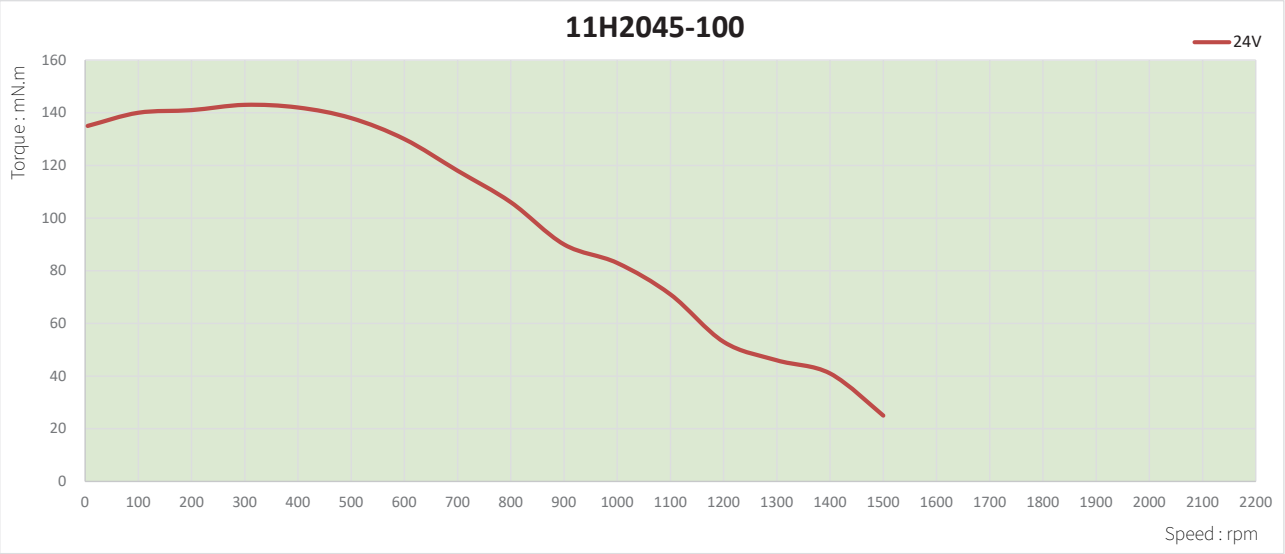

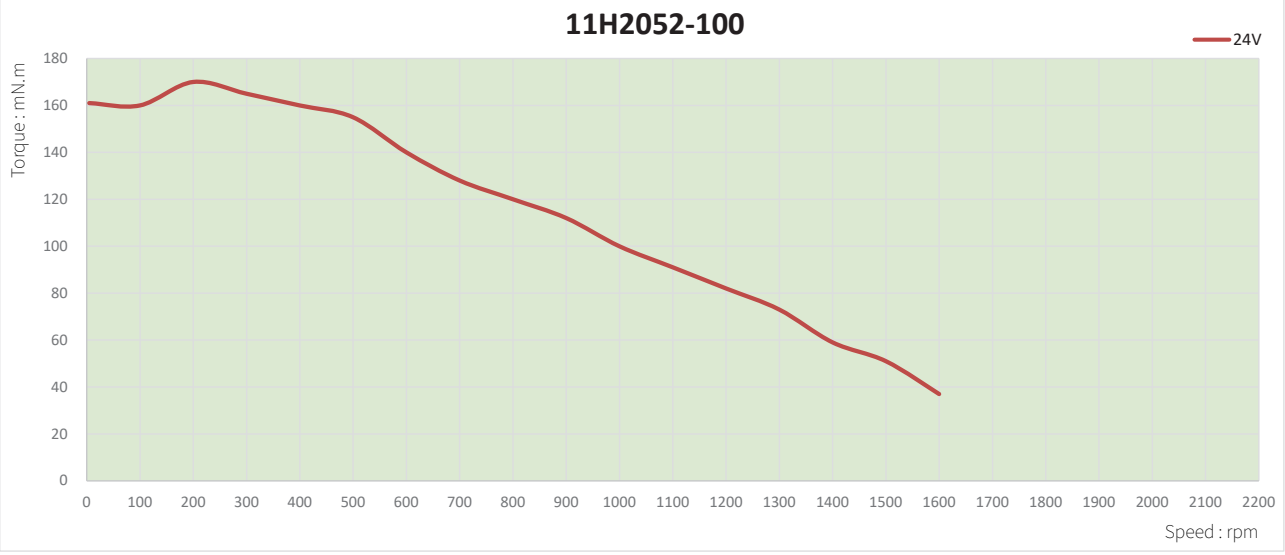

[2-phase] Size 14 (35mm) Series

The size 14 [35mm] Hybrid Rotary Stepper Motor has Max. 0.4N·m of holding torque.
Encoders and 32mm frame planetary gearbox solutions are available.
For special windings or customization, please contact DINGS' for further information.

Parameters

General			
Accuracy	Step angle	1.8°±5%	
	Resistance	±10% @ 20°C	
	Inductance	±20% @ 1 kHz	
Insulation class		B	
Duty type		S1	
Dielectric strength		500 VAC / 1 KHz / 1 mA / 1 s	
Insulation resistance		100 MΩ / 500 VDC	
Permissible radial load (5mm distance from mounting surface)	Permissible radial load (10mm distance from mounting surface)	Permissible radial load (15mm distance from mounting surface)	Permissible radial load (20mm distance from mounting surface)
50N	40N	25N	20N

Parameter							
Type	Current (A [RMS])	Resistance (Ω)	Inductance (mH)	Holding Torque (N·m)	Rotor Inertia (g·cm²)	Length (mm)	Mass (g)
14H2027	0.5	10.3	5.9	0.1	12	26.5	150
14H2037	1.5	1.7	1.4	0.2	20	37.25	210
14H2052	1.5	2.7	2.8	0.4	35	53.5	250

Material	
End bell	Aluminum alloy
Bearing	Deep groove ball bearing
Magnet	Sintered NdFeB
Shaft	Stainless steel
Wiring	UL 3265, 26AWG

Dimensional Drawings

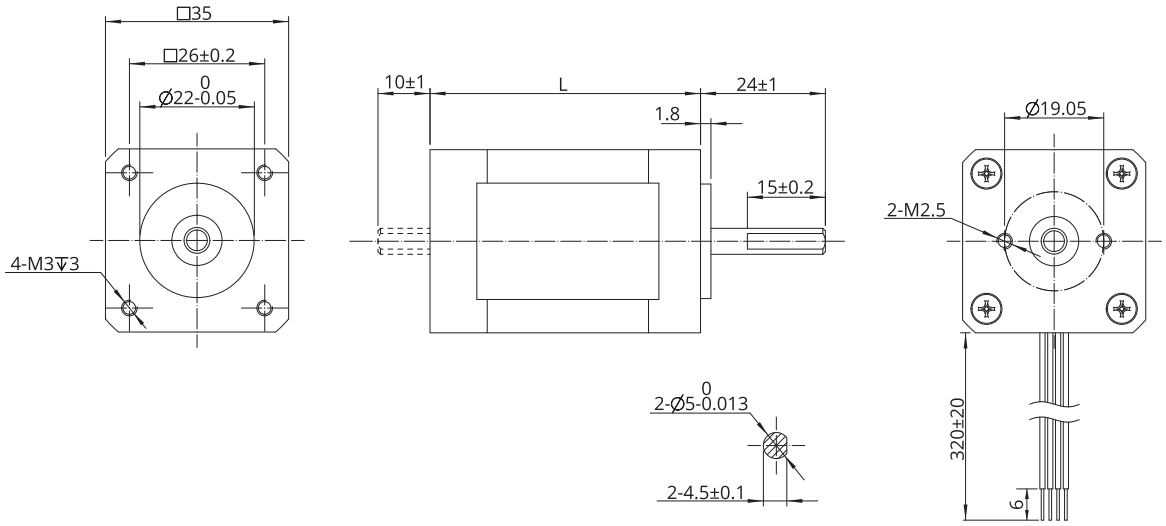

Note : All drawings are 1st-angle projection - ISO Compliant (3D models available)

[2-phase] Size 14 (35mm) Series

Torque Performance Curves

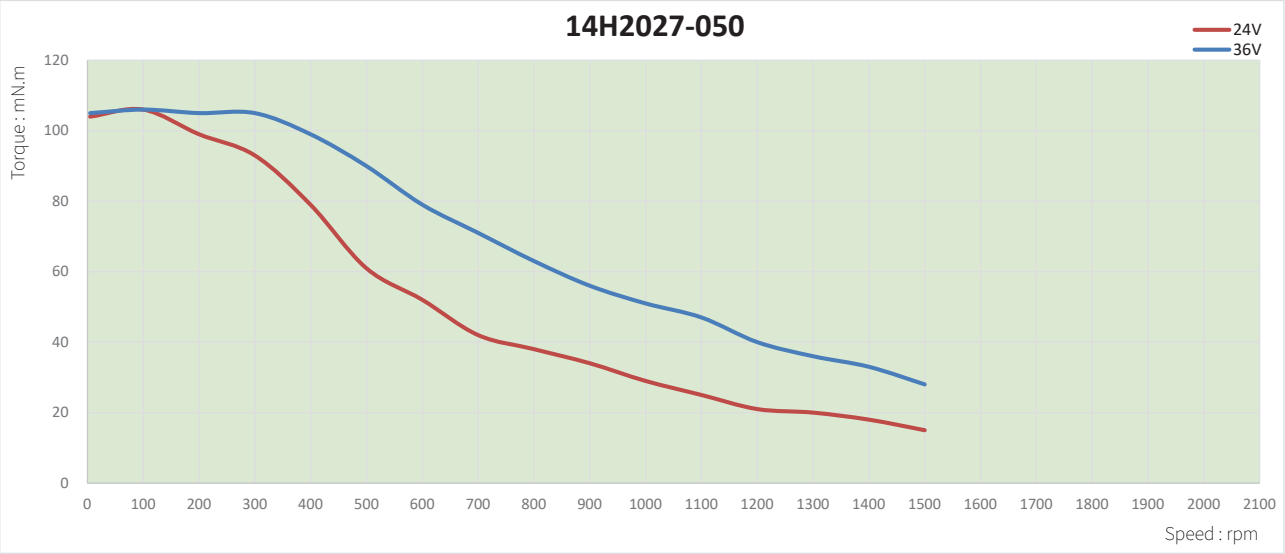

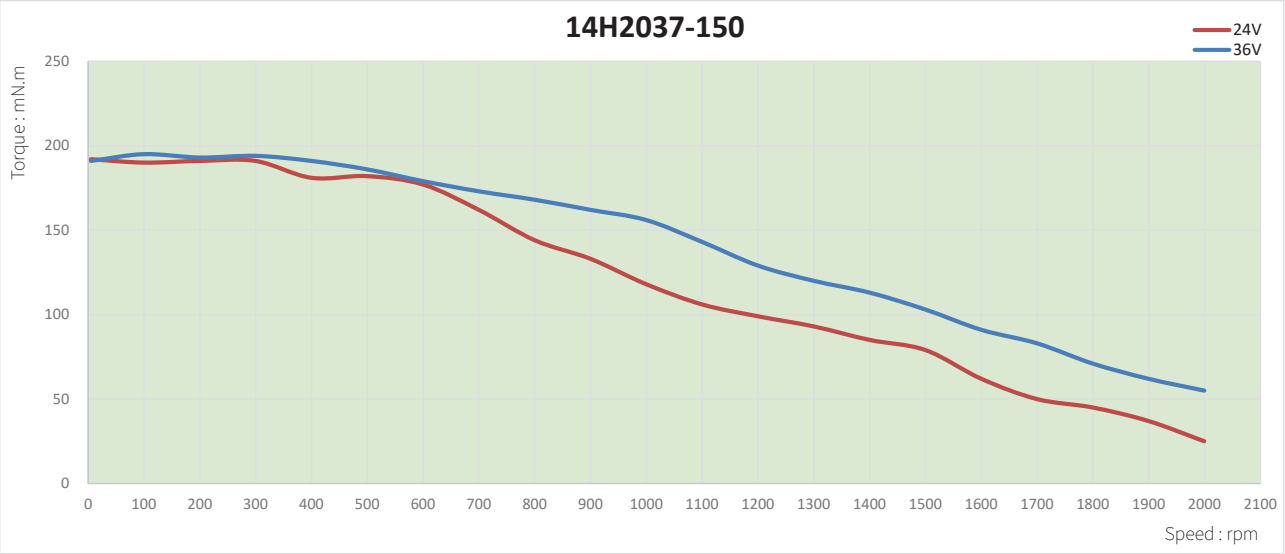

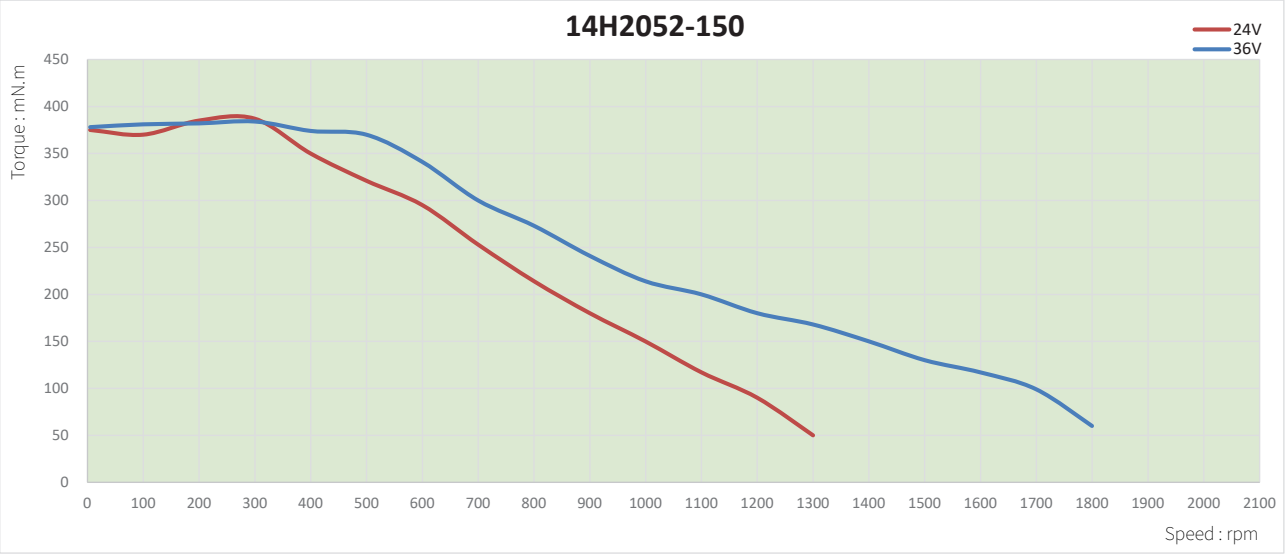

[2-phase] Size 17 (42mm) Series

The size 17 [42mm] Hybrid Rotary Stepper Motor has Max. 0.72N·m of holding torque. Encoders and 42mm frame planetary gearbox solutions are available.
For special windings or customization, please contact DINGS' for further information.

Parameters

General			
Accuracy	Step angle	1.8°±5%	
	Resistance	±10% @ 20°C	
	Inductance	±20% @ 1 kHz	
Insulation class		B	
Duty type		S1	
Dielectric strength		500 VAC / 1 KHz / 1 mA / 1 s	
Insulation resistance		100 MΩ / 500 VDC	
Permissible radial load (5mm distance from mounting surface)	Permissible radial load (10mm distance from mounting surface)	Permissible radial load (15mm distance from mounting surface)	Permissible radial load (20mm distance from mounting surface)
50N	40N	25N	20N

Parameter							
Type	Current (A [RMS])	Resistance (Ω)	Inductance (mH)	Holding Torque (N·m)	Rotor Inertia (g·cm²)	Length (mm)	Mass (g)
17H2031	1.2	1.7	2.3	0.16	23	30.1	200
17H2034	1.2	2.1	2.7	0.25	25	34.1	230
17H2041	1.2	2.4	4.7	0.4	54	40.1	300
17H2049	2	1.3	2	0.48	77	48.1	360
17H2061	2	1.7	3.6	0.72	110	60.1	500

Material	
End bell	Aluminum alloy
Bearing	Deep groove ball bearing
Magnet	Sintered NdFeB
Shaft	Stainless steel
Wiring	UL 3265, 26 / 24AWG

[2-phase] Size 17 (42mm) Series

Dimensional Drawings

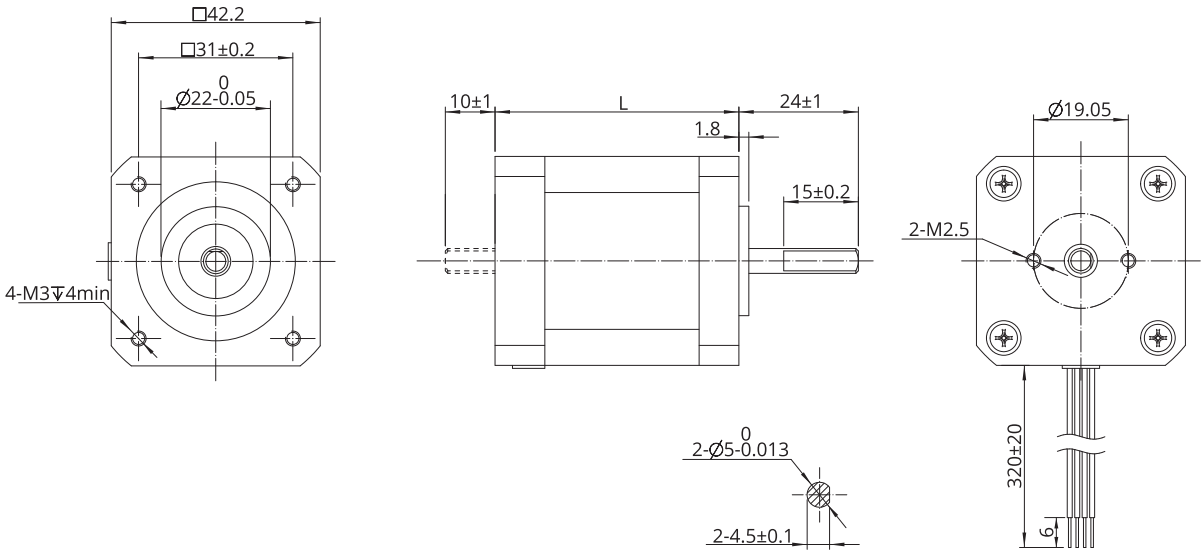

Torque Performance Curves

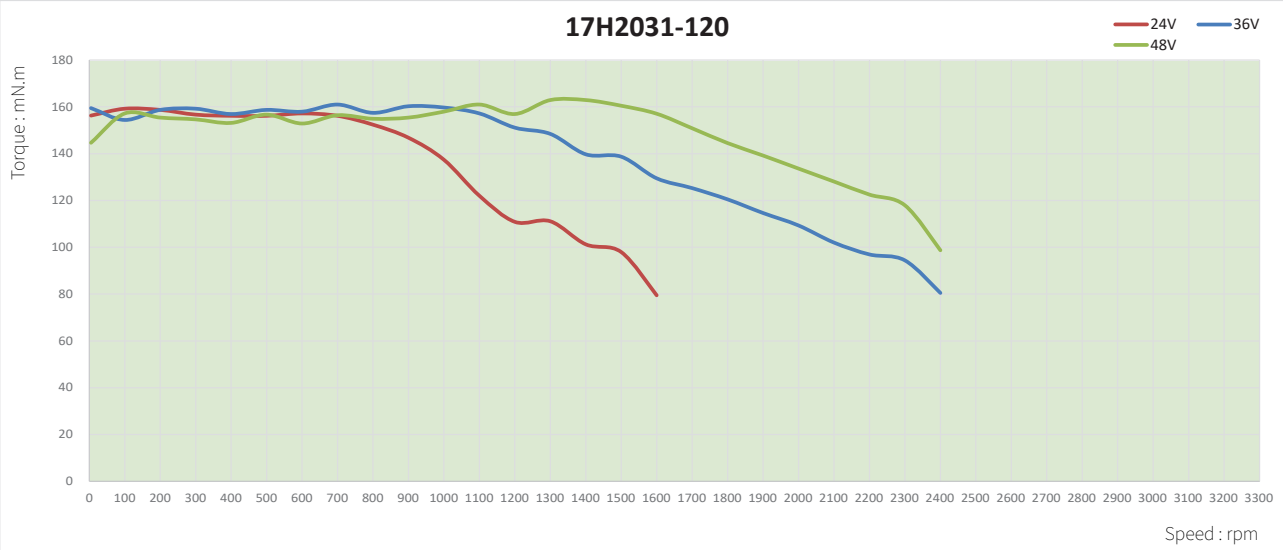

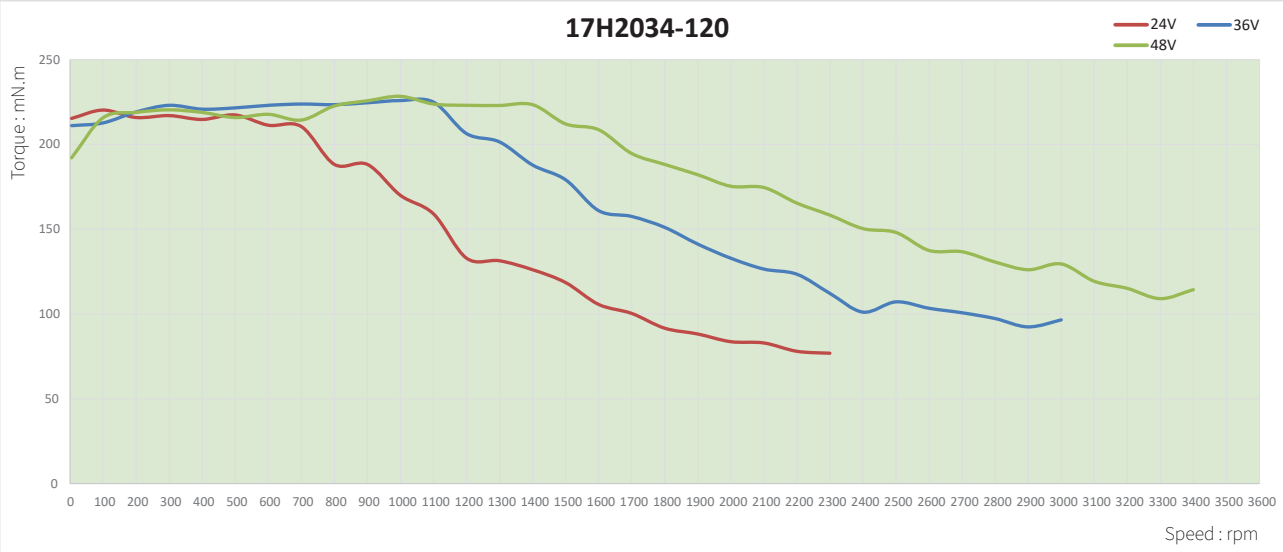

Note : All drawings are 1st-angle projection - ISO Compliant (3D models available)

[2-phase] Size 17 (42mm) Series

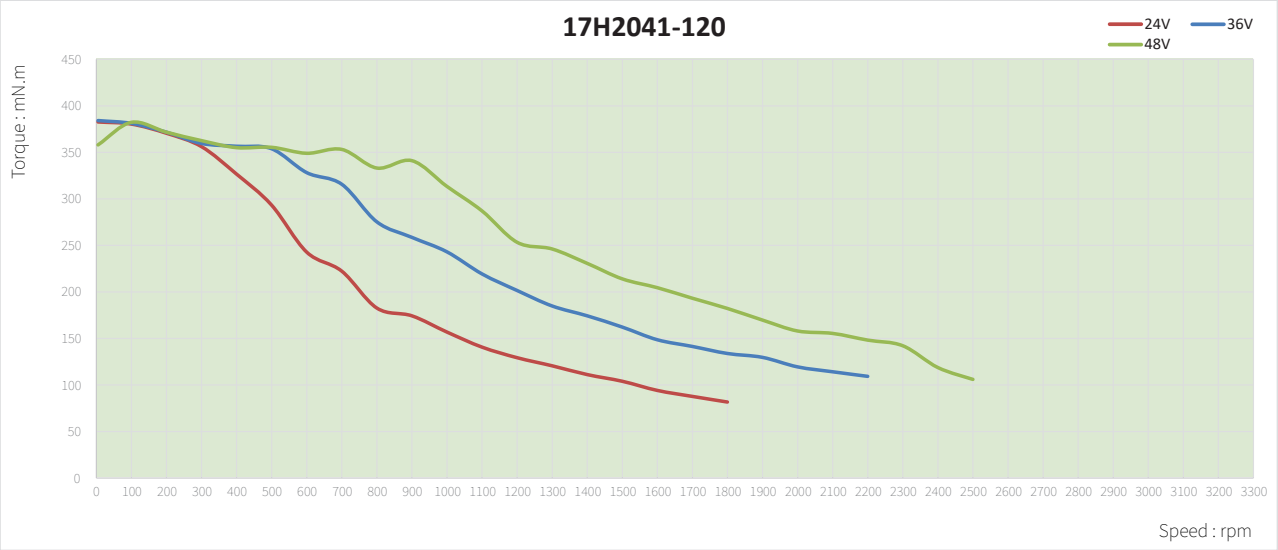

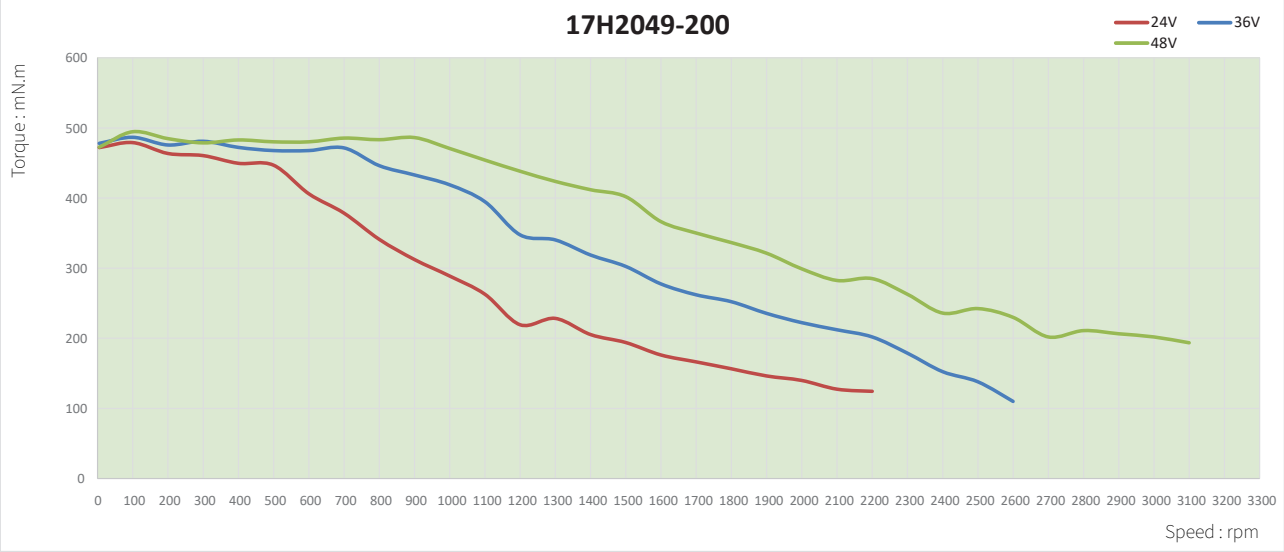

[2-phase] Size 23 (57mm) Series

The size 23 [57mm] Hybrid Rotary Stepper Motor has Max. 3.0N·m of holding torque.
Encoders and 57mm frame planetary gearbox solutions are available.
For special windings or customization, Please contact DINGS' for further information.

Parameters

General			
Accuracy	Step angle	1.8°±5%	
	Resistance	±10% @ 20°C	
	Inductance	±20% @ 1 kHz	
Insulation class		B	
Duty type		S1	
Dielectric strength		500 VAC / 1 KHz / 1 mA / 1 s	
Insulation resistance		100 MΩ / 500 VDC	
Permissible radial load (5mm distance from mounting surface)	Permissible radial load (10mm distance from mounting surface)	Permissible radial load (15mm distance from mounting surface)	Permissible radial load (20mm distance from mounting surface)
180N	130N	100N	90N

Parameter							
Type	Current (A [RMS])	Resistance (Ω)	Inductance (mH)	Holding Torque (N·m)	Rotor Inertia (g·cm²)	Length (mm)	Mass (g)
23H2042	1	4.2	9	0.6	140	41	460
23H2045	1	4.5	12	0.8	180	44	520
23H2051	2	1.5	4.4	1	240	51	640
23H2055	2	1.6	5.2	1.2	280	54	720
23H2065	3	0.9	2.7	1.6	350	64	860
23H2076	4	0.6	2.4	2	480	75	1060
23H2100	5	0.46	2.3	3	720	100	1500

Material	
End bell	Aluminum alloy
Bearing	Deep groove ball bearing
Magnet	Sintered NdFeB
Shaft	Stainless steel
Wiring	UL 3265, 22 / 20AWG

[2-phase] Size 23 (57mm) Series

Dimensional Drawings

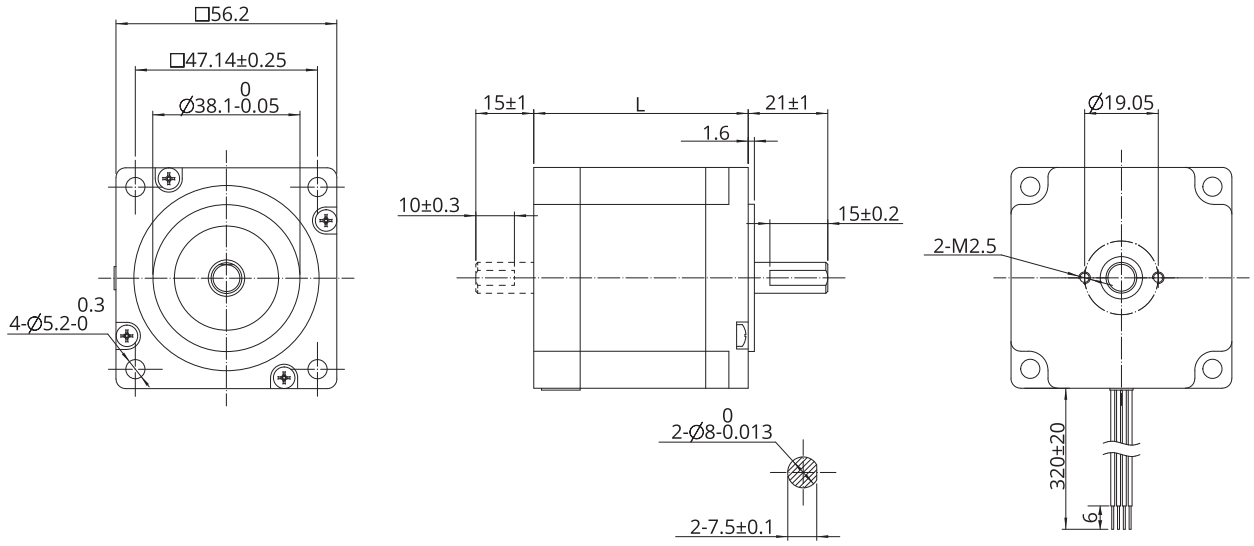

Torque Performance Curves

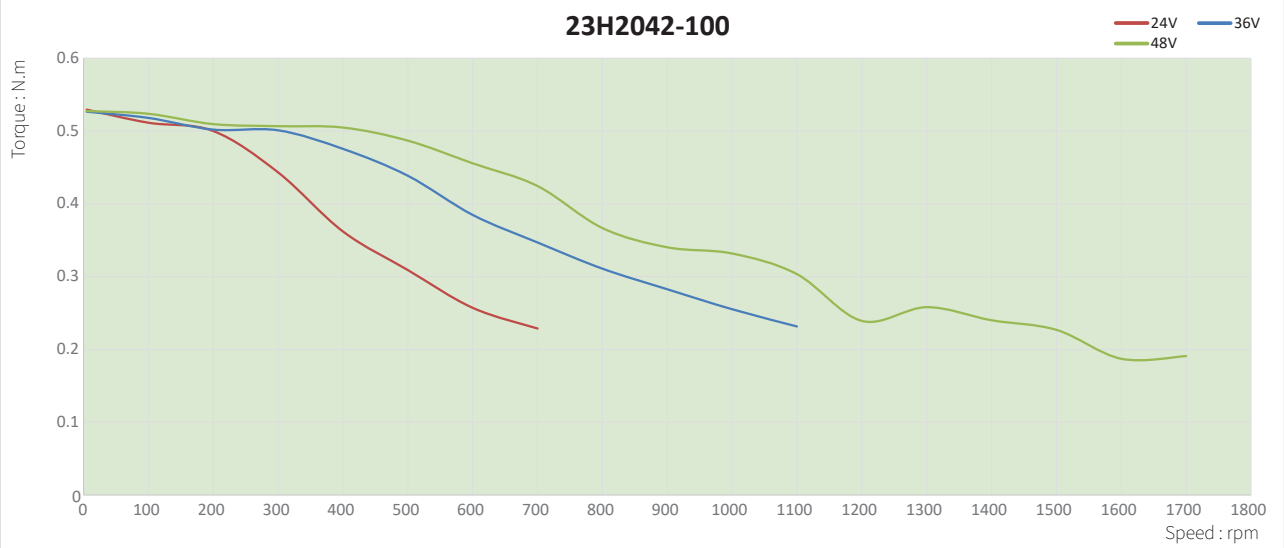

Note : All drawings are 1st-angle projection - ISO Compliant (3D models available)

[2-phase] Size 23 (57mm) Series

[2-phase] Size 23 (57mm) Series

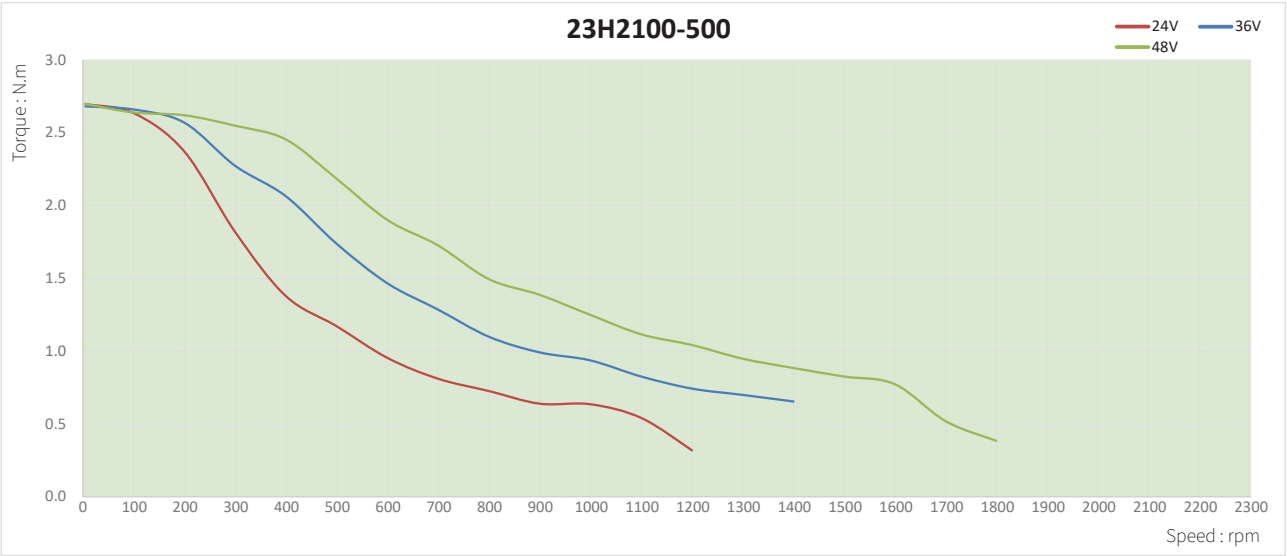

[2-phase] Size 24 (60mm) Series

The size 24 [60mm] Hybrid Rotary Stepper Motor has Max. 3.0N·m of holding torque.
Encoders and 60mm frame planetary gearbox solutions are available.
For special windings or customization, Please contact DINGS' for further information.

Parameters

General			
Accuracy	Step angle	1.8°±5%	
	Resistance	±10% @ 20°C	
	Inductance	±20% @ 1 kHz	
Insulation class		B	
Duty type		S1	
Dielectric strength		500 VAC / 1 KHz / 1 mA / 1 s	
Insulation resistance		100 MΩ / 500 VDC	
Permissible radial load (5mm distance from mounting surface)	Permissible radial load (10mm distance from mounting surface)	Permissible radial load (15mm distance from mounting surface)	Permissible radial load (20mm distance from mounting surface)
210N	170N	140N	120N

Parameter							
Type	Current (A [RMS])	Resistance (Ω)	Inductance (mH)	Holding Torque (N·m)	Rotor Inertia (g·cm²)	Length (mm)	Mass (g)
24H2047	2	1.5	3.4	1	240	47	600
24H2056	3	0.8	2.3	1.5	340	56	800
24H2068	4	0.6	1.9	2.1	490	68	1000
24H2085	5	0.4	1.8	3	690	85	1300

Material	
End bell	Aluminum alloy
Bearing	Deep groove ball bearing
Magnet	Sintered NdFeB
Shaft	Stainless steel
Wiring	UL 3265, 20 / 22AWG

[2-phase] Size 24 (60mm) Series

Dimensional Drawings

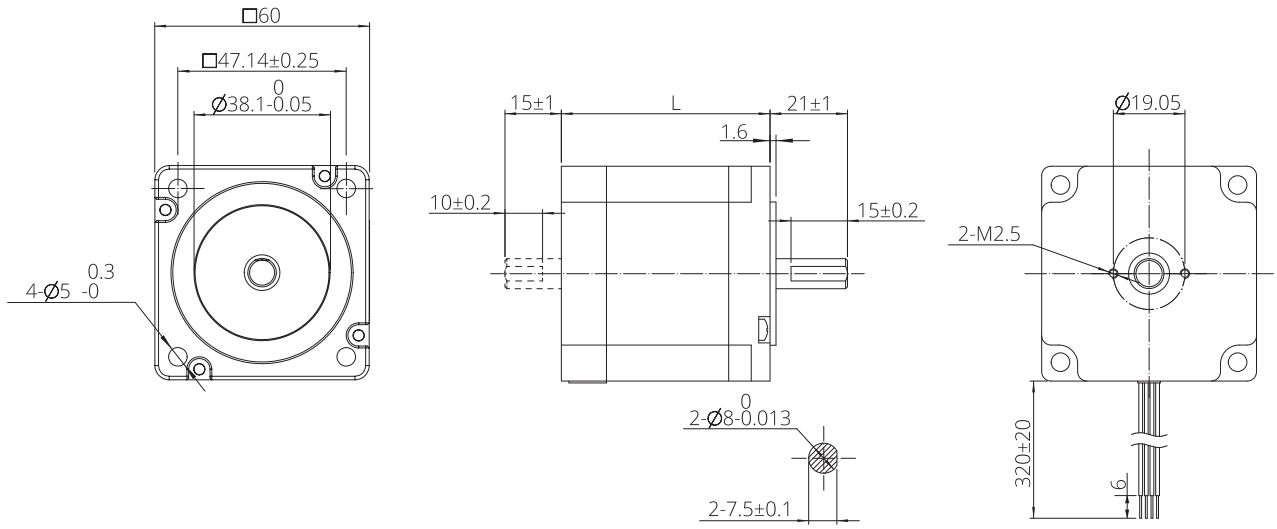

Torque Performance Curves

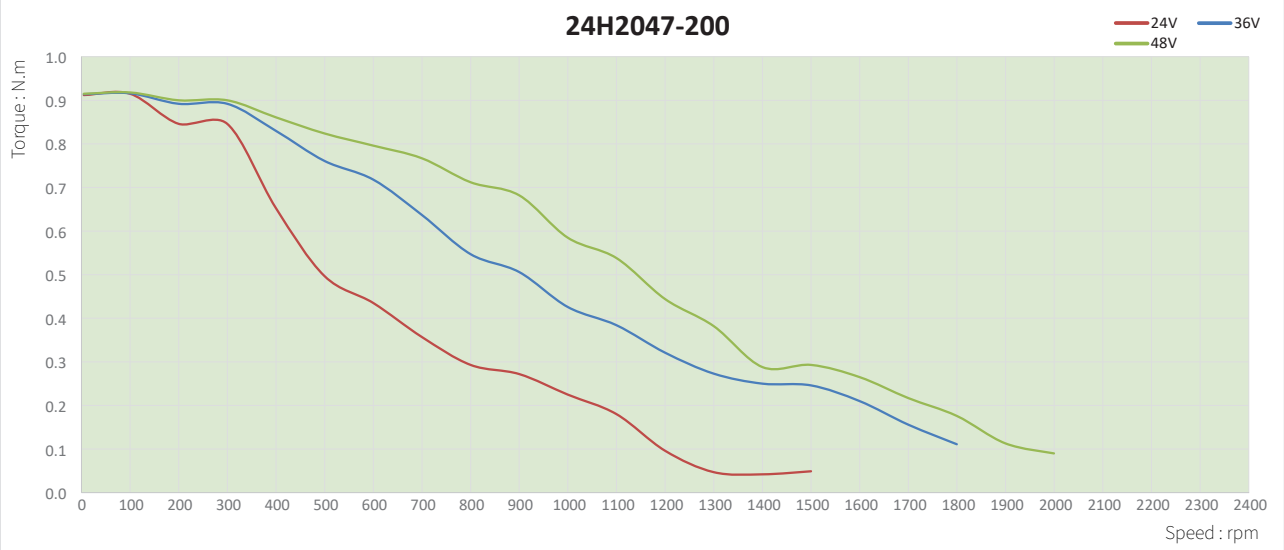

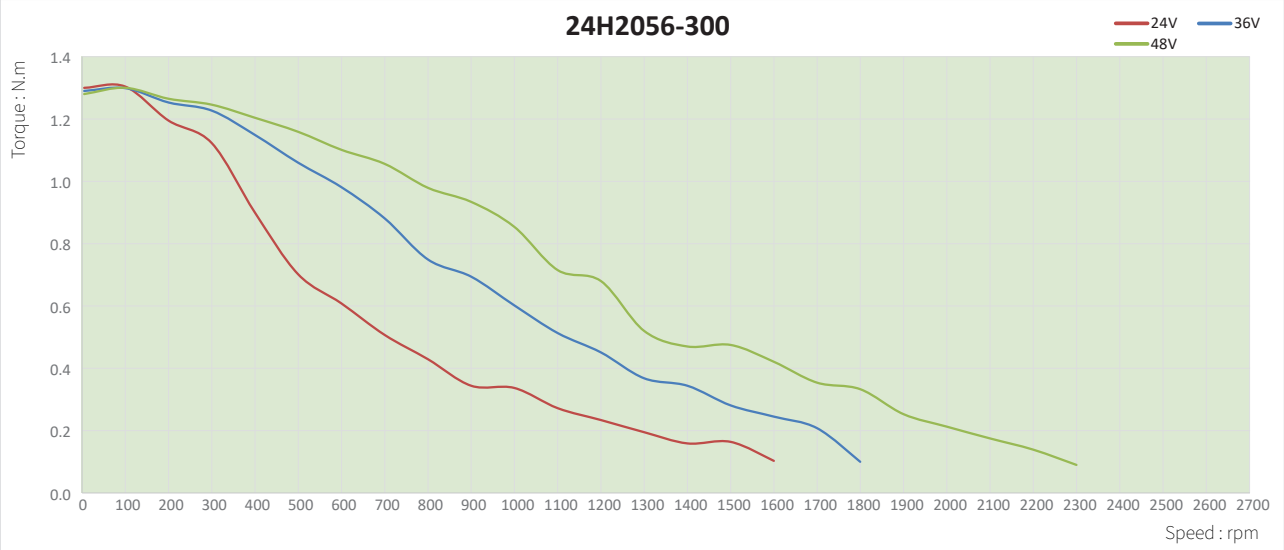

Note : All drawings are 1st-angle projection - ISO Compliant (3D models available)

[2-phase] Size 24 (60mm) Series

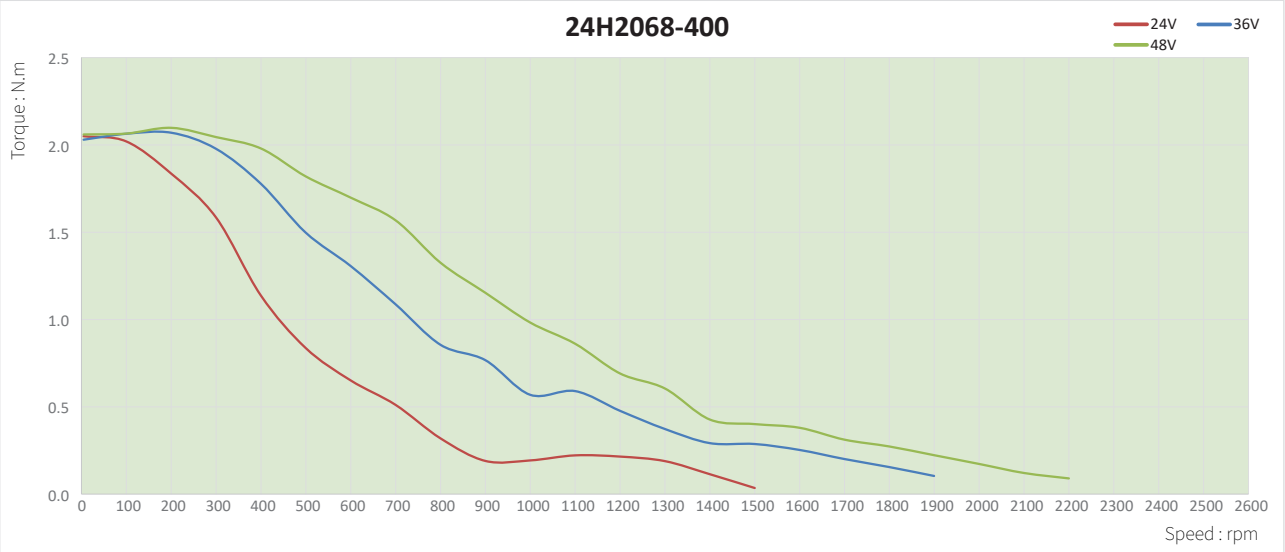

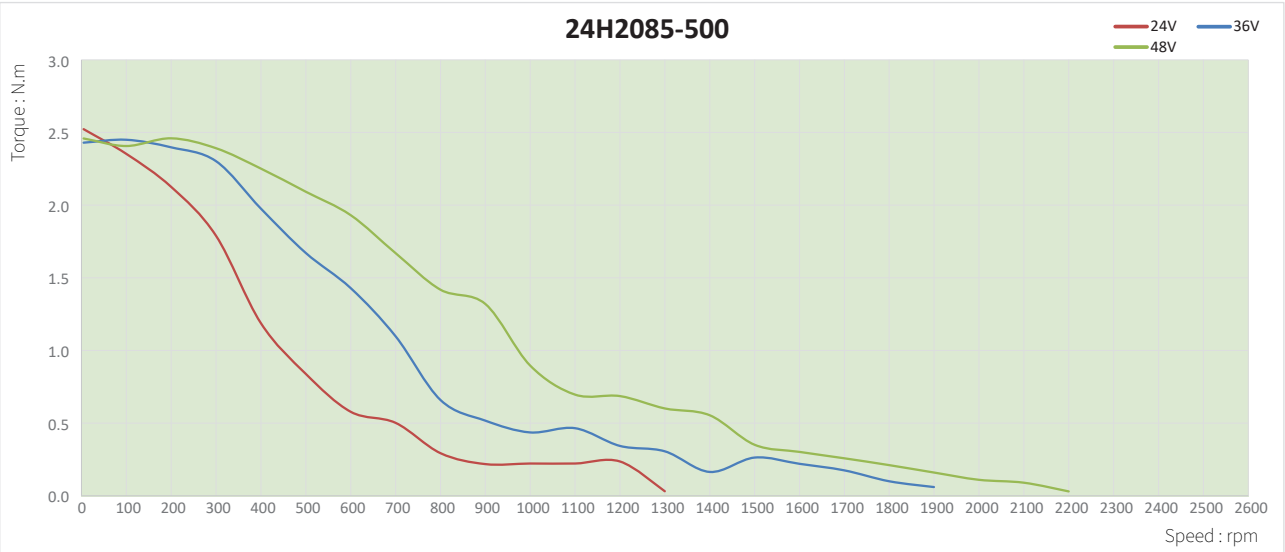

[2-phase] Size 34 (86mm) Series

The size 34 [86mm] Hybrid Rotary Stepper Motor has Max. 7.0N·m of holding torque. Encoders solutions are available.
For special windings or customization,
please contact DINGS' for further information.

Parameters

General			
Accuracy	Step angle	1.8°±5%	
	Resistance	±10% @ 20°C	
	Inductance	±20% @ 1 kHz	
Insulation class		B	
Duty type		S1	
Dielectric strength		500 VAC / 1 KHz / 1 mA / 1 s	
Insulation resistance		100 MΩ / 500 VDC	
Permissible radial load (5mm distance from mounting surface)	Permissible radial load (10mm distance from mounting surface)	Permissible radial load (15mm distance from mounting surface)	Permissible radial load (20mm distance from mounting surface)
600N	550N	480N	390N

Parameter							
Type	Current (A [RMS])	Resistance (Ω)	Inductance (mH)	Holding Torque (N·m)	Rotor Inertia (g·cm²)	Length (mm)	Mass (g)
34H2060	3	1	6	3	1100	60	1600
34H2075	4.5	0.6	4.2	4.5	1800	75	2100
34H2098	6	0.5	4	7	2800	98	2900

Material	
End bell	Aluminum alloy
Bearing	Deep groove ball bearing
Magnet	Sintered NdFeB
Shaft	Stainless steel
Wiring	UL 3265, 18AWG

Dimensional Drawings

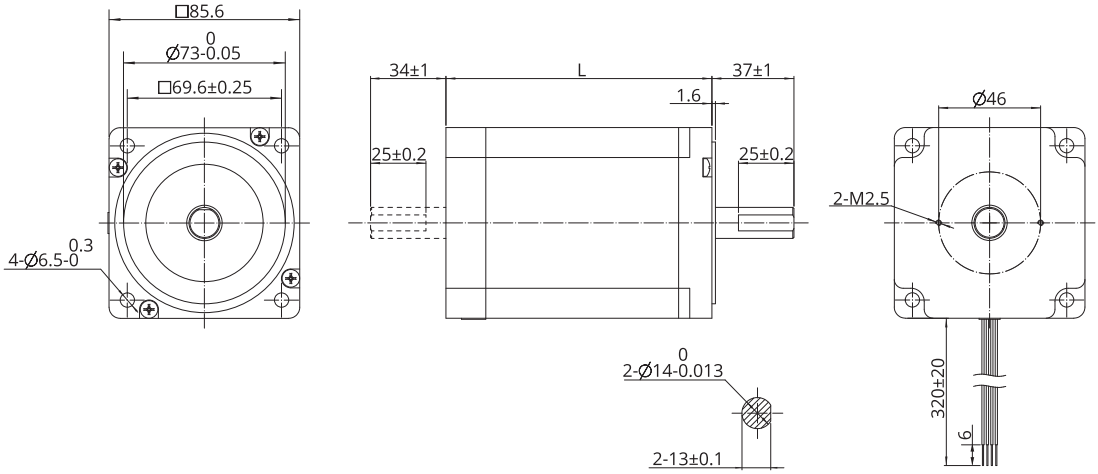

Note : All drawings are 1st-angle projection - ISO Compliant (3D models available)

[2-phase] Size 34 (86mm) Series

Torque Performance Curves

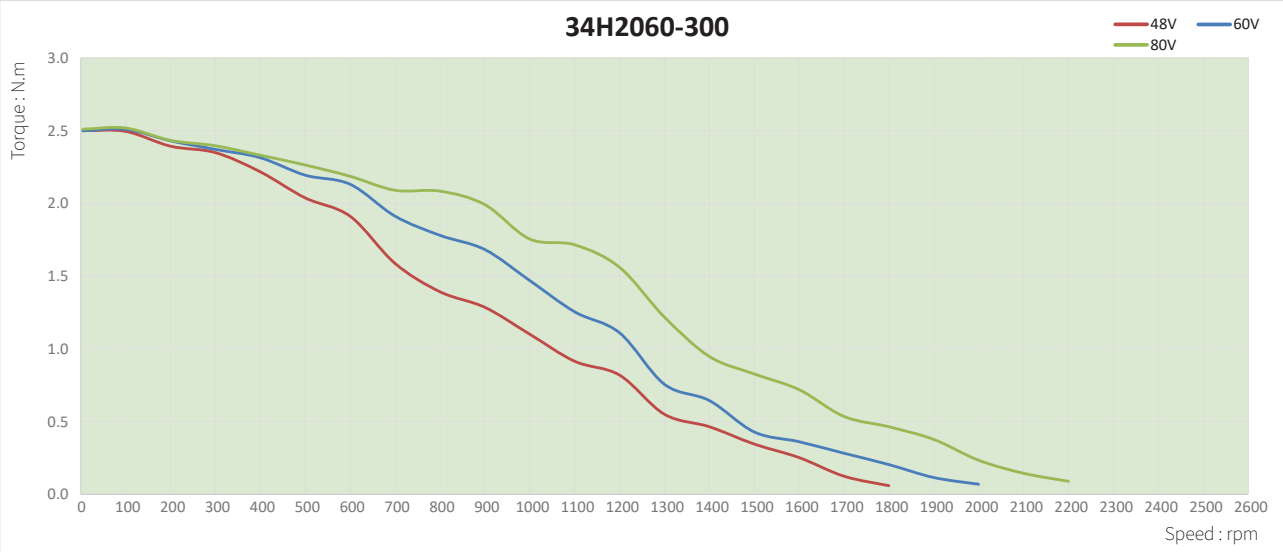

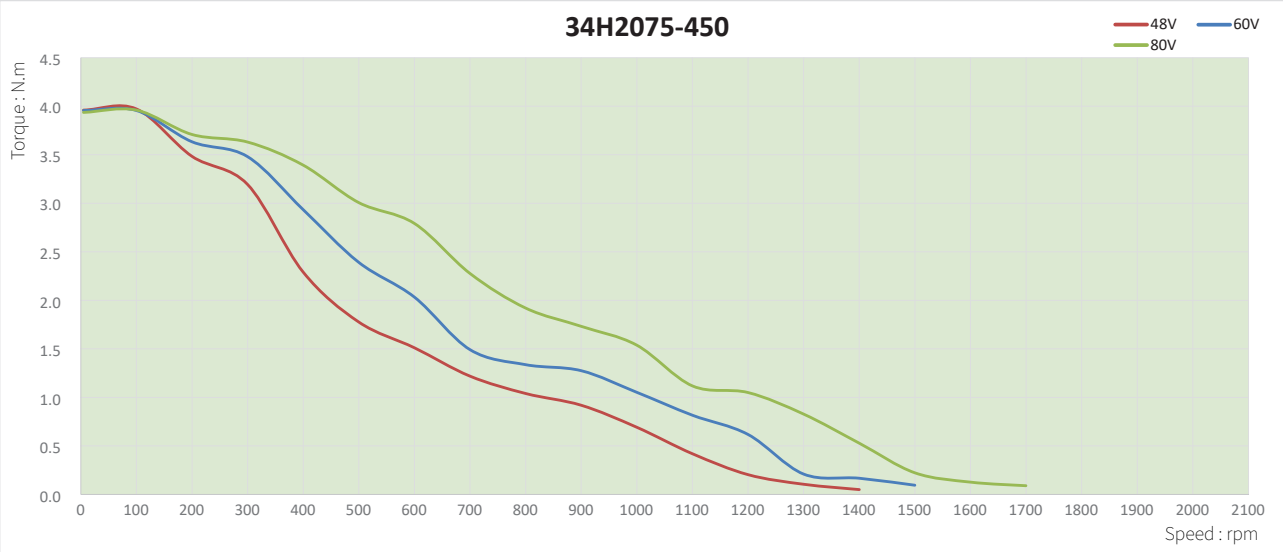

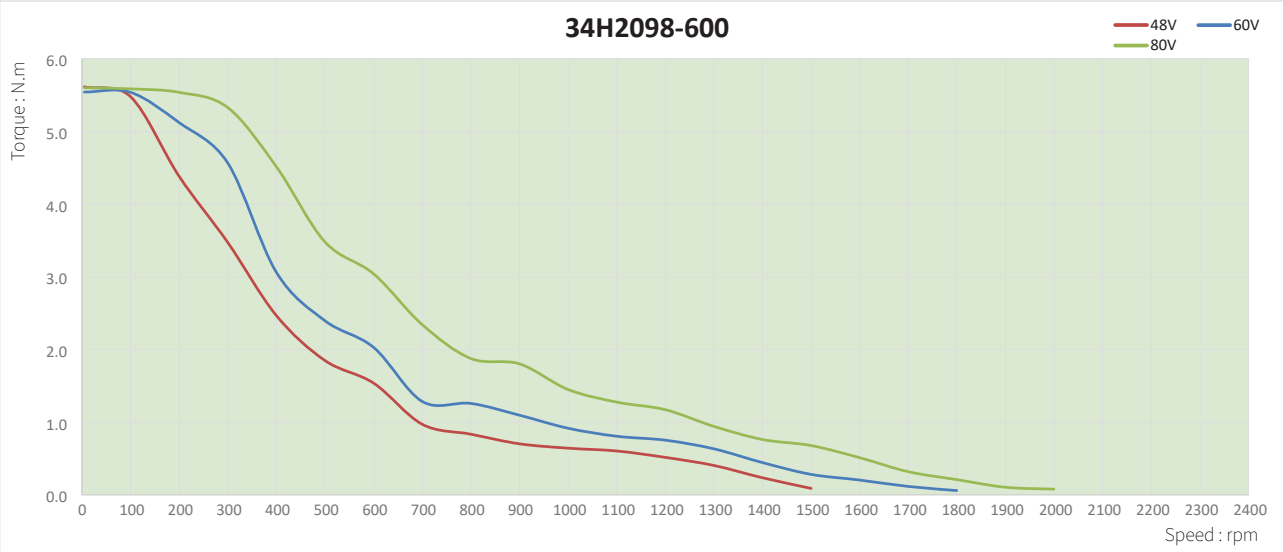

5-Phase Hybrid Rotary Stepper Motor

DINGS' 5-phase stepper motors deliver exceptional precision and low vibration, outperforming conventional 2-phase stepper motors with superior resolution and significantly reduced vibration and resonance. Featuring a 0.72° step angle, they enable smooth motion and highly accurate positioning, making them ideal for applications where precise movement is critical.

Furthermore, their stable low-speed performance and high torque characteristics make them well-suited for a wide range of applications, from precision equipment to industrial automation systems. These advantages ensure reliable operation across various demanding environments, supporting both performance and productivity.

Product Overview	B-26
11 · 28 mm	B-27
17 · 42 mm	B-29
24 · 60 mm	B-32

Product Overview

Part Number	Current (A [RMS])	Resistance (Ω)	Inductance (mH)	Holding Torque (N·m)	Rotor Inertia (g·cm²)	Motor Length (mm)	Mass (g)
11H5033	1.2	0.56	0.2	0.05	9	33	110
11H5052	1.2	0.88	0.45	0.09	18	52	200
17H5034	1.8	0.34	0.35	0.22	35	34	240
17H5041	1.8	0.45	0.55	0.3	54	41	300
17H5049	1.8	0.5	0.7	0.37	77	49	360
17H5061	1.8	0.65	1.1	0.5	110	61	500
24H5044	2.4	0.3	0.55	0.6	230	44	550

[5-phase] Size 11 (28mm) Series

Motor Characteristics

Model	Phase	Step angle (°)	Rated current (A)	Resistance (Ω)	Inductance (mH)	Holding torque (N.m)	Rotor inertia (g·cm²)	Length (mm)	Weight (kg)
11H5033-120-5AT	5	0.72	1.2	0.56	0.2	0.05	9	33	0.11
11H5052-120-5AT	5	0.72	1.2	0.88	0.45	0.09	18	52	0.2

Permissible radial load (5mm distance from mounting surface)	Permissible radial load (10mm distance from mounting surface)	Permissible radial load (15mm distance from mounting surface)	Permissible radial load (20mm distance from mounting surface)
50N	35N	25N	20N

Torque Performance Curves

TEST CONDITION
Testing Voltage: 24Vdc, Driver Model: DS-OLF2-FPD, Rated Current 1.2A (rms)

[5-phase] Size 11 (28mm) Series

Dimensional Drawings

- **11H5033-120**

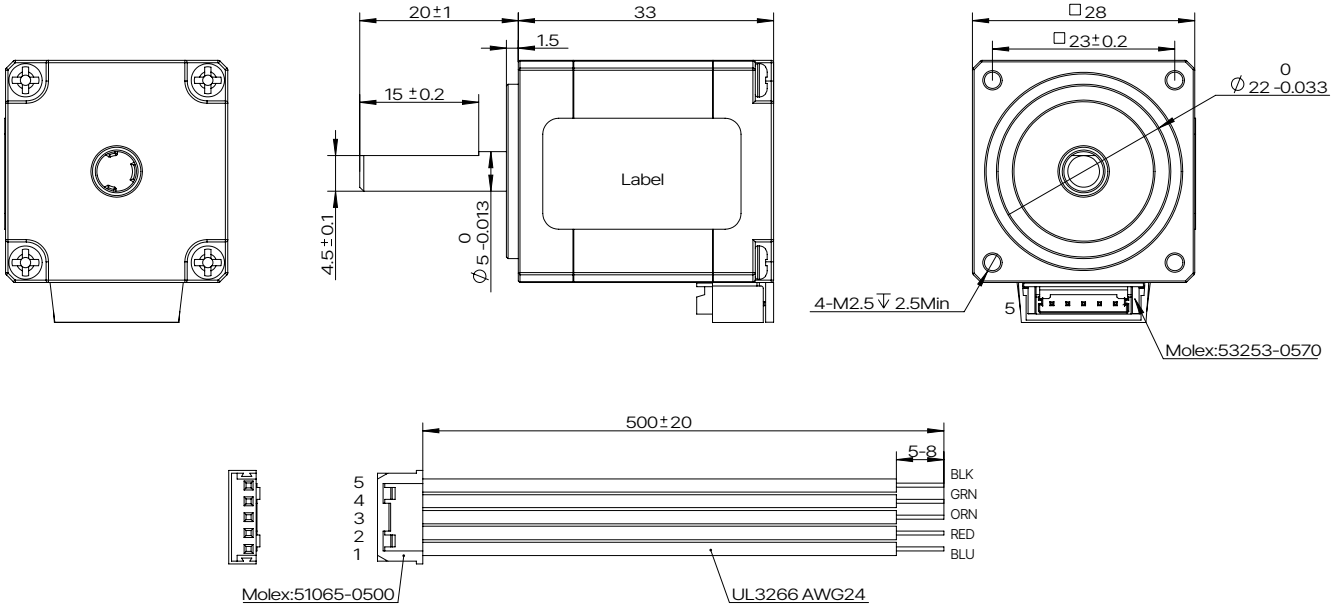

- **11H5052-120**

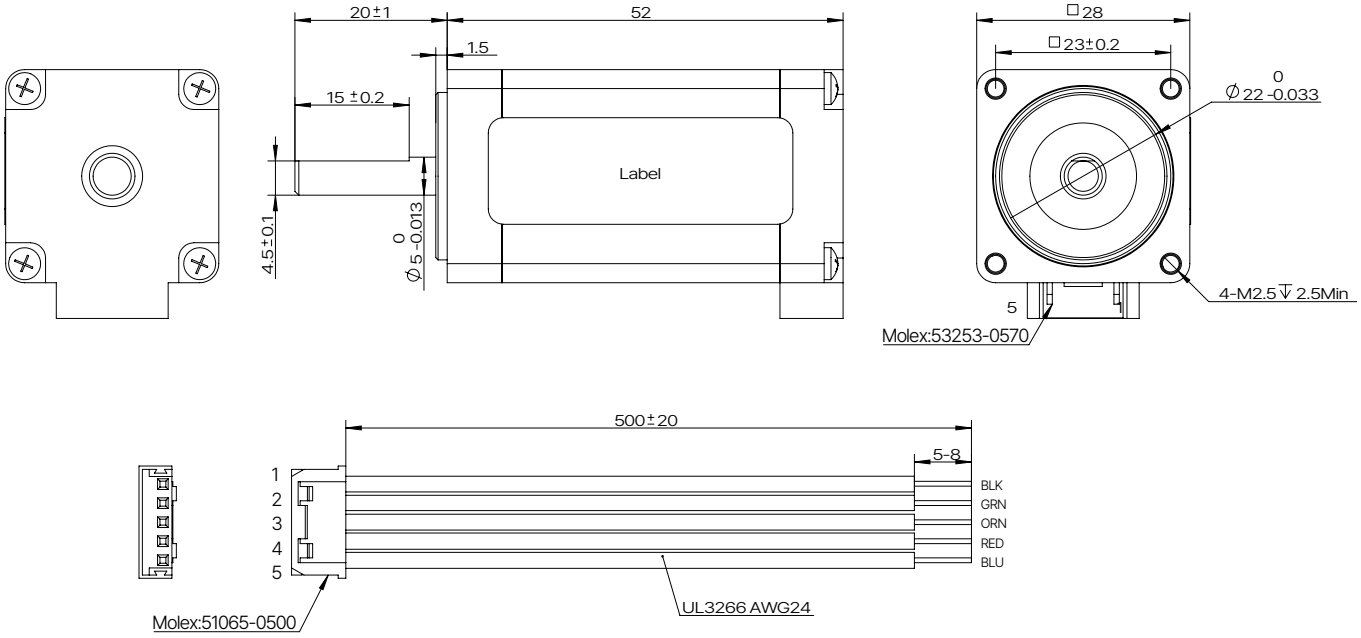

[5-phase] Size 17 (42mm) Series

Motor Characteristics

Model	Phase	Step angle (°)	Rated current (A)	Resistance (Ω)	Inductance (mH)	Holding torque (N.m)	Rotor inertia (g·cm²)	Length (mm)	Weight (kg)
17H5034-180-5AT	5	0.72	1.8	0.34	0.35	0.22	35	34	0.24
17H5041-180-5AT	5	0.72	1.8	0.45	0.55	0.3	54	41	0.3
17H5049-180-5AT	5	0.72	1.8	0.5	0.7	0.37	77	49	0.36
17H5061-180-5AT	5	0.72	1.8	0.65	1.1	0.5	110	61	0.5

Permissible radial load (5mm distance from mounting surface)	Permissible radial load (10mm distance from mounting surface)	Permissible radial load (15mm distance from mounting surface)	Permissible radial load (20mm distance from mounting surface)
50N	40N	25N	20N

Torque Performance Curves

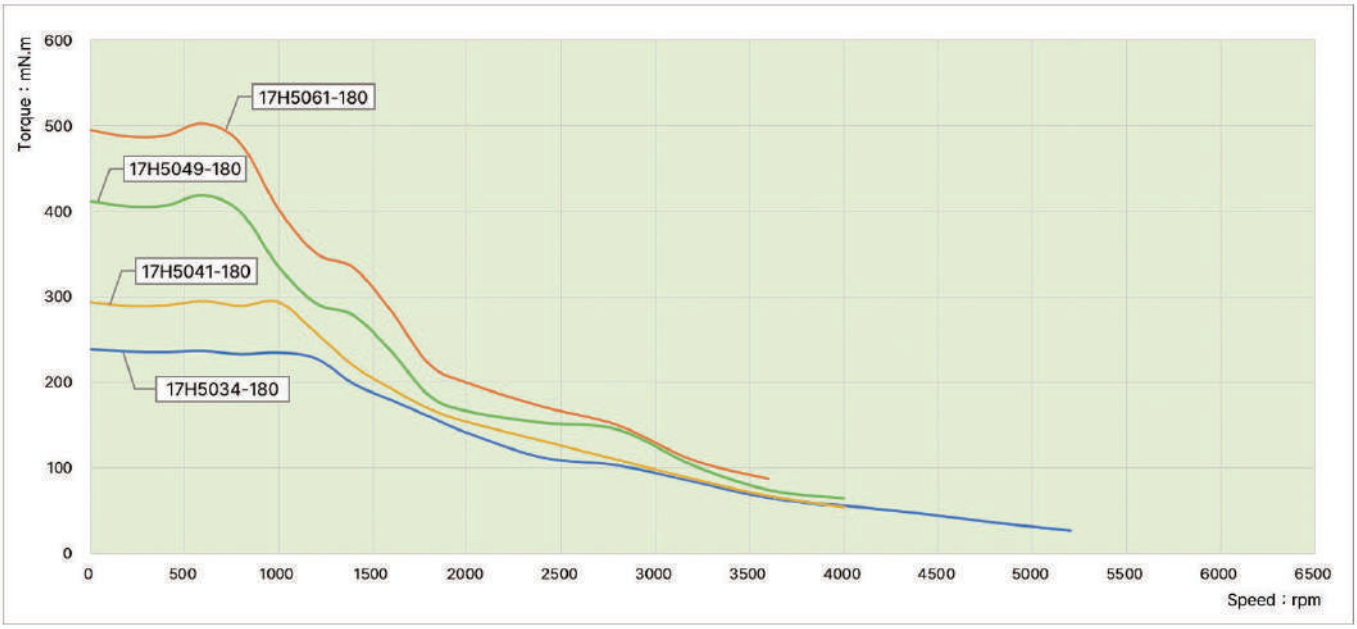

TEST CONDITION
Testing Voltage: 24Vdc, Driver Model: DS-OLF2-FPD, Rated Current 1.8A (rms)

[5-phase] Size 17 (42mm) Series

Dimensional Drawings

- 17H5034-180

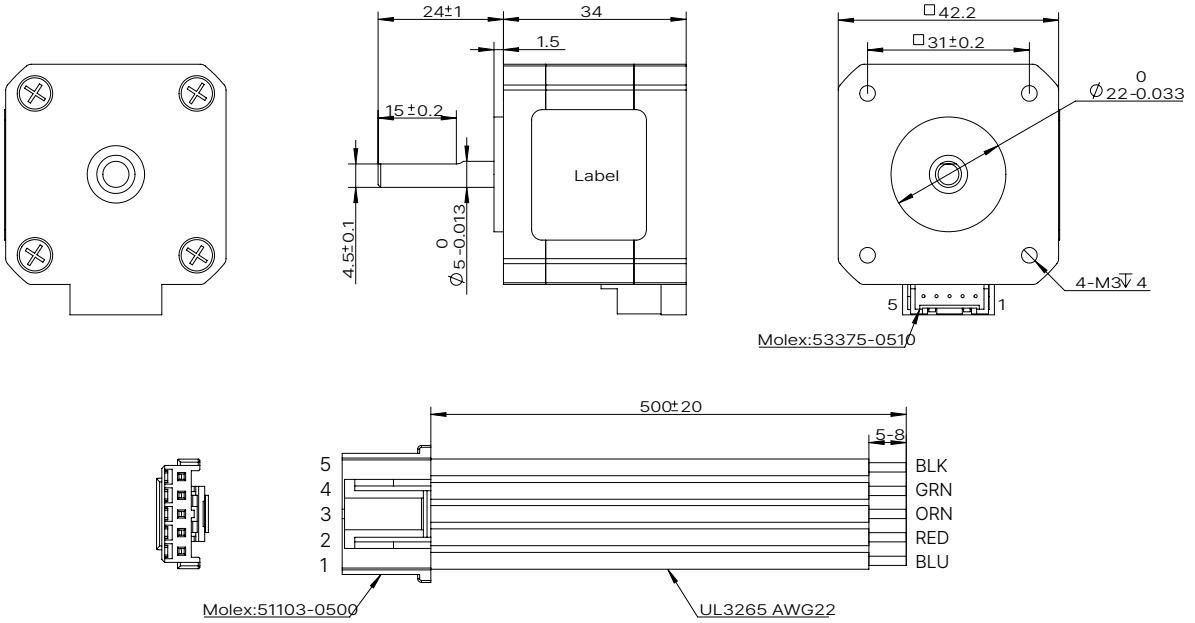

- 17H5041-180

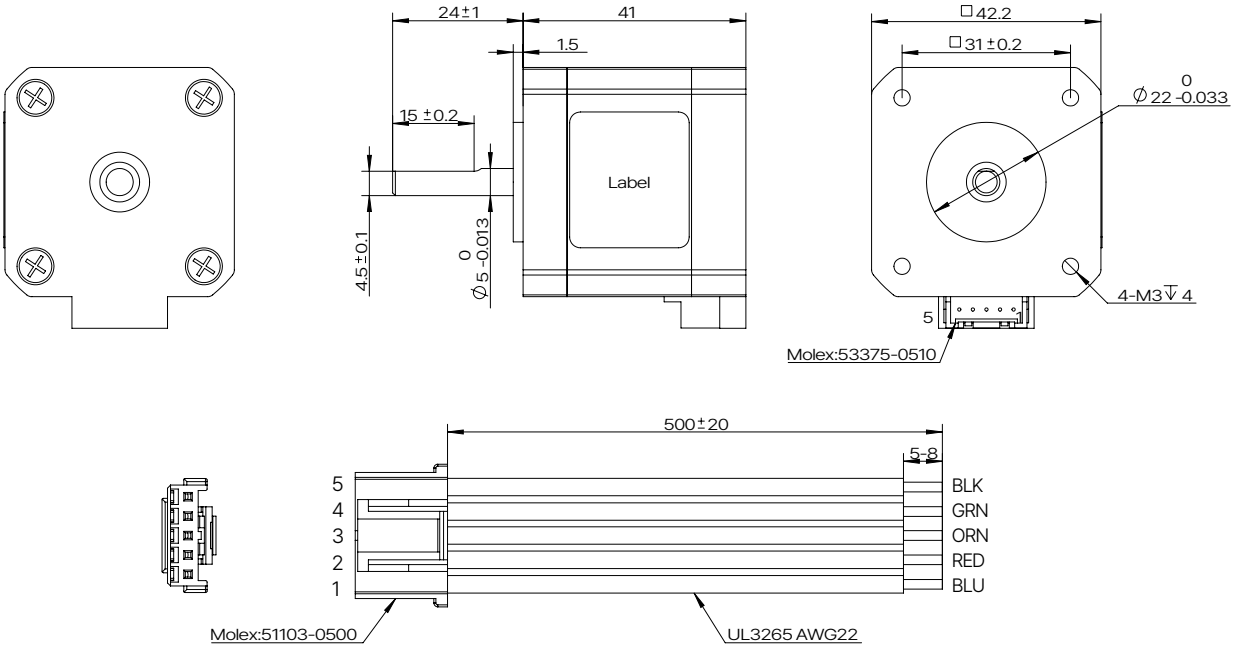

[5-phase] Size 17 (42mm) Series

Dimensional Drawings

- **17H5049-180**

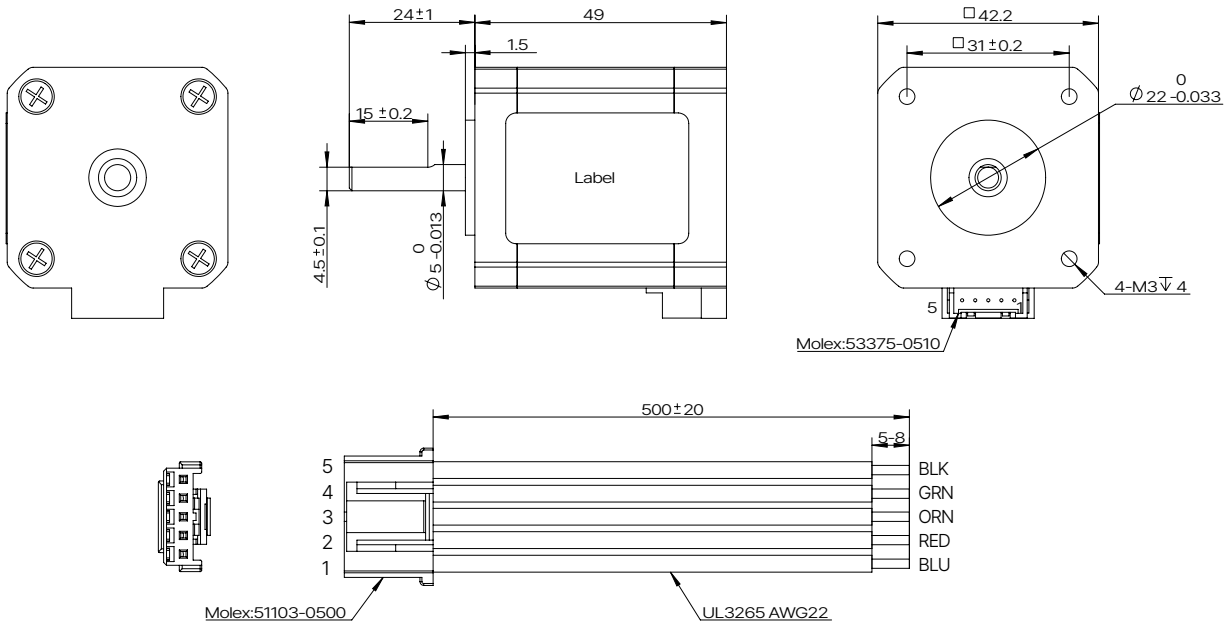

- **17H5061-180**

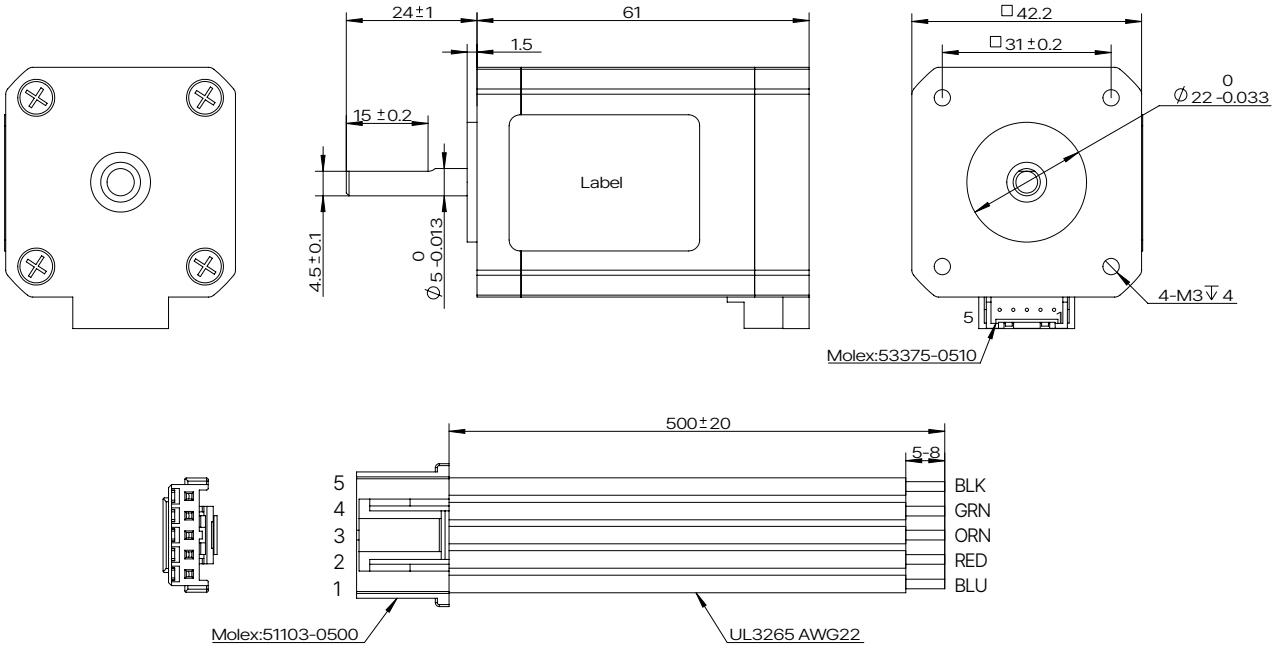

[5-phase] Size 24 (60mm) Series

Motor Characteristics

Model	Phase	Step angle (°)	Rated current (A)	Resistance (Ω)	Inductance (mH)	Holding torque (N.m)	Rotor inertia (g·cm²)	Length (mm)	Weight (kg)
24H5044-240-5AL	5	0.72	2.4	0.3	0.55	0.6	230	44	0.55

Permissible radial load (5mm distance from mounting surface)	Permissible radial load (10mm distance from mounting surface)	Permissible radial load (15mm distance from mounting surface)	Permissible radial load (20mm distance from mounting surface)
210N	170N	140N	120N

Torque Performance Curves

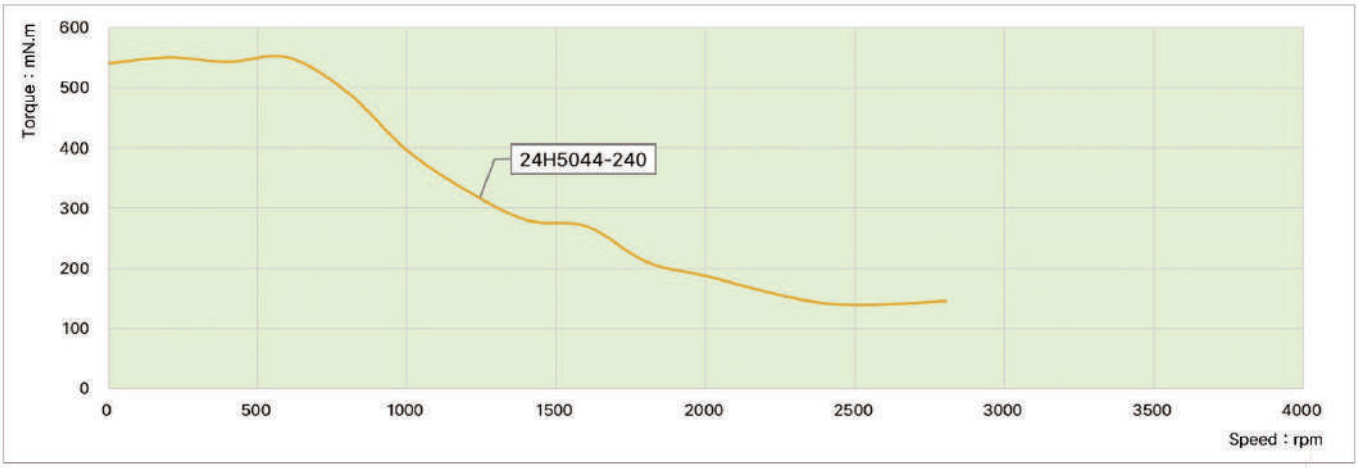

TEST CONDITION

Testing Voltage: 24Vdc, Driver Model: DS-OLF2-FPD, Rated Current 2.4A (rms)

Dimensional Drawings

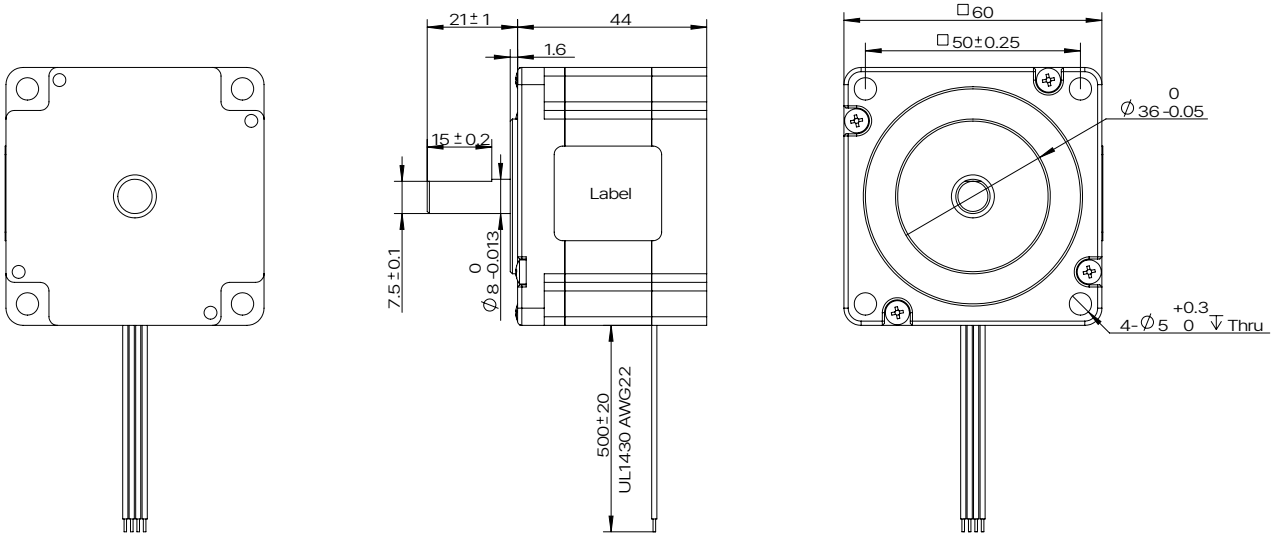

Accessories and Options

Planetary Gearbox

Overview

Frame size	Ratio	Rated torque (N·m)	Limit torque (N·m)	Stages	Efficiency (%)	Length (mm)	Mass (g)	Corresponding motor
22 mm	4	0.03	0.09	1	81	16.3	29.1	20 mm
	15	0.05	0.15	2	66	16.3	30.1	
	20							
	107	0.1	0.3	3	53	19.5	36	
28 mm	3.3	0.5	1.5	1	90	21.2	87	28 mm
	4.6							
	11.2	1	3	2	81	26.9	91	
	15.5							
	21.5							
	37.7	2.5	7.5	3	73	32.7	100	
	72							
32 mm	3.3	0.5	1.5	1	90	16.2	90	35 mm
	4.6							
	11.2	1	3	2	81	21.9	115	
	15.5							
	21.5							
	37.7	2.5	7.5	3	73	27.7	140	
	72							
42 mm	3.7	1	3	1	90	30.6	260	42 mm
	5.2							
	13.7	2	6	2	81	41.9	350	
	19.2							
	26.9							
	50.9	5	15	3	73	53.2	440	
	71.2							
	99.5							
57 mm	5	6	12	1	95	53	800	57 mm
	10							
	15	25	40	2	90	70	1100	
	20							
	25							
60 mm	5	6	12	1	95	53	900	60 mm
	10							
	15	25	40	2	90	70	1200	
	20							
	25							
86 mm	3	50	100	1	95	89	2080	86 mm
	4							
	5							
	7							
	16	80	160	2	90	112	2830	
	20							
	25							
	28							
	35							
	40							
	50							

For customized options, please contact DINGS' or your local distributor

Accessories and Options

- **22mm Frame Planetary Gearbox**

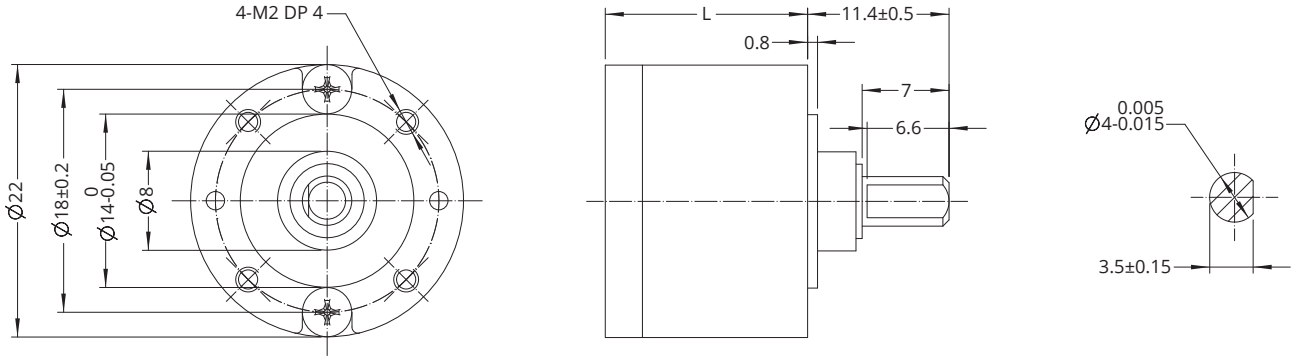

Housing material			Metal			
No load backlash			1°			
Bearing			Sleeve bearing			
Ratio	Rated torque (N·m)	Limit torque (N·m)	Stages	Efficiency (%)	Length (mm)	Mass (g)
4	0.03	0.09	1	81	16.3	29.1
15 20	0.05	0.15	2	66	16.3	30.1
107	0.1	0.3	3	53	19.5	36

- **28mm Frame Planetary Gearbox**

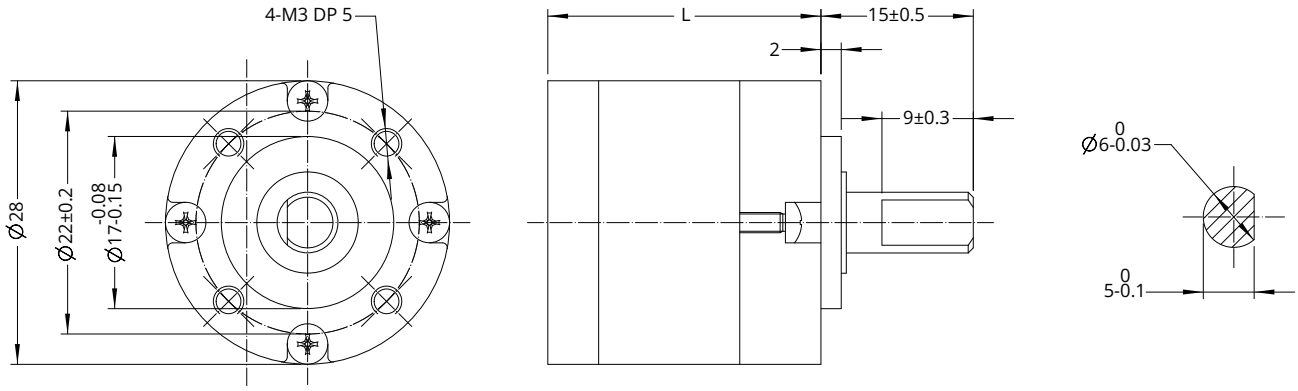

Housing material			Metal			
No load backlash			1°			
Bearing			Ball bearing			
Ratio	Rated torque (N·m)	Limit torque (N·m)	Stages	Efficiency (%)	Length (mm)	Mass (g)
3.3 4.6	0.5	1.5	1	90	21.2	87
11.2 15.5 21.5	1	3	2	81	26.9	91
37.7 72	2.5	7.5	3	73	32.7	100

Accessories and Options

32mm Frame Planetary Gearbox

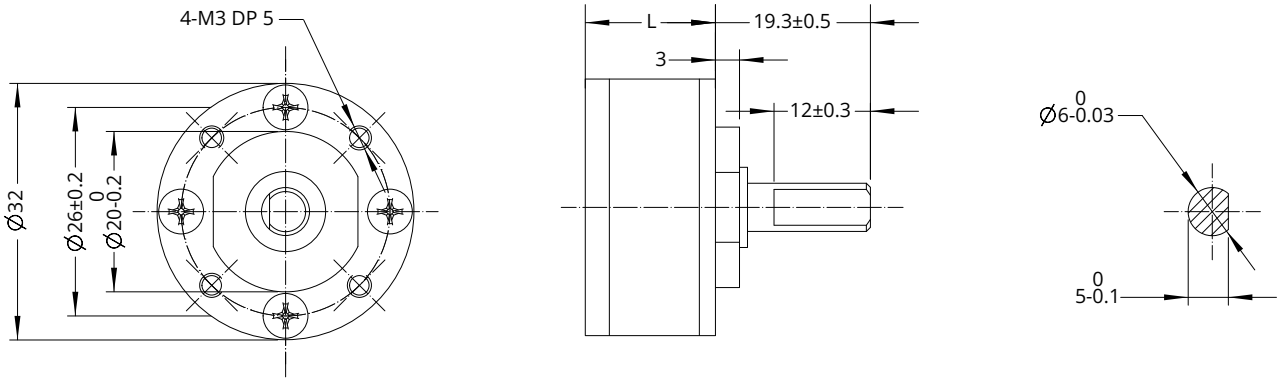

Housing material			Metal			
No load backlash			1°			
Bearing			Ball bearing			
Ratio	Rated torque (N·m)	Limit torque (N·m)	Stages	Efficiency (%)	Length (mm)	Mass (g)
3.3 4.6	0.5	1.5	1	90	16.2	90
11.2 15.5 21.5	1	3	2	81	21.9	115
37.7 72	2.5	7.5	3	73	27.7	140

42mm Frame Planetary Gearbox

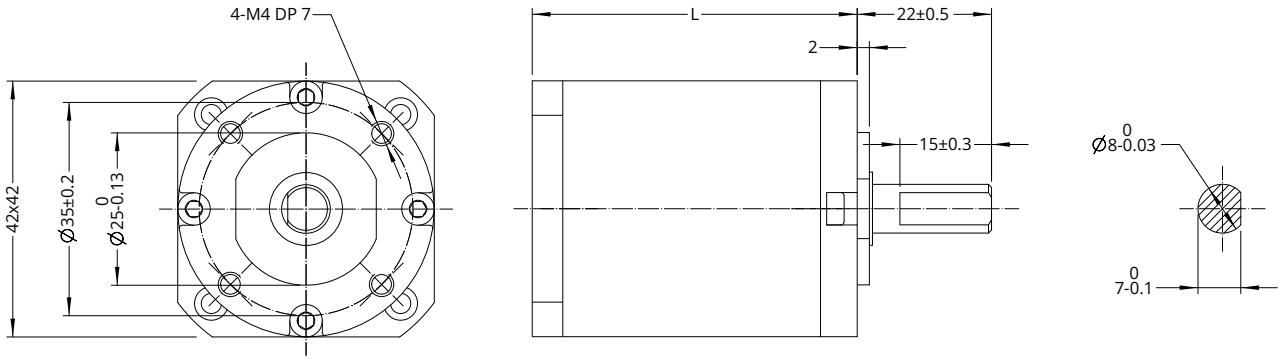

Housing material			Metal			
No load backlash			1.2°			
Bearing			Ball bearing			
Ratio	Rated torque (N·m)	Limit torque (N·m)	Stages	Efficiency (%)	Length (mm)	Mass (g)
3.7 5.2	1	3	1	90	30.6	260
13.7 19.2 26.9	2	6	2	81	41.9	350
50.9 71.2 99.5	5	15	3	73	53.2	440

Accessories and Options

- **57mm Frame Planetary Gearbox**

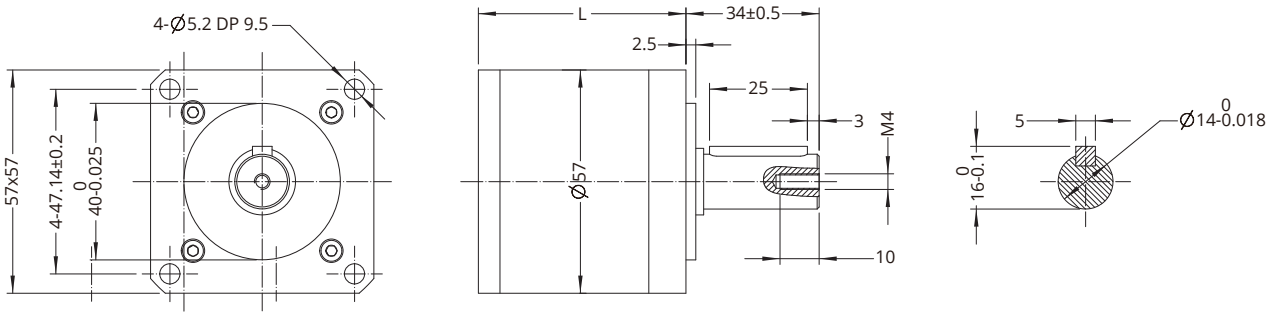

Housing material			Metal			
No load backlash			First stage 15 arcmin, second stage 25 arcmin			
Bearing			Ball bearing			
Ratio	Rated torque (N·m)	Limit torque (N·m)	Stages	Efficiency (%)	Length (mm)	Mass (g)
5 10	6	12	1	95	53	800
15 20 25	25	40	2	90	70	1100

- **60mm Frame Planetary Gearbox**

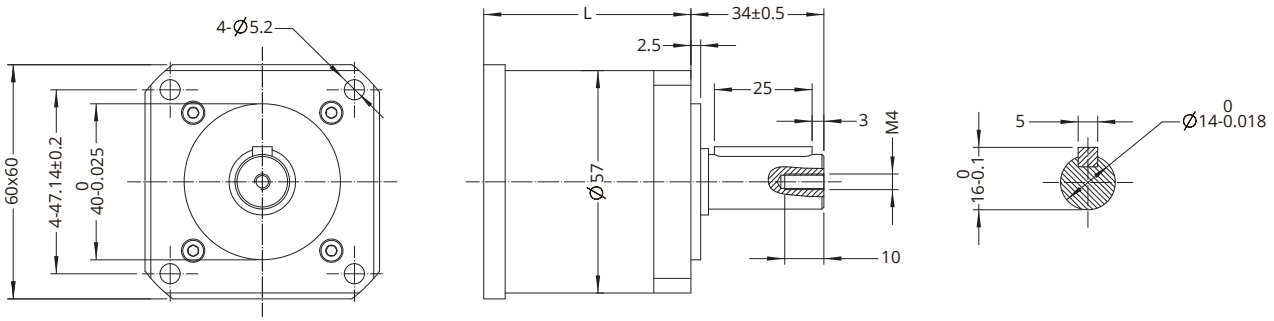

Housing material			Metal			
No load backlash			First stage 15 arcmin, second stage 25 arcmin			
Bearing			Ball bearing			
Ratio	Rated torque (N·m)	Limit torque (N·m)	Stages	Efficiency (%)	Length (mm)	Mass (g)
5 10	6	12	1	95	53	900
15 20 25	25	40	2	90	70	1200

Accessories and Options

- **86mm Frame Planetary Gearbox**

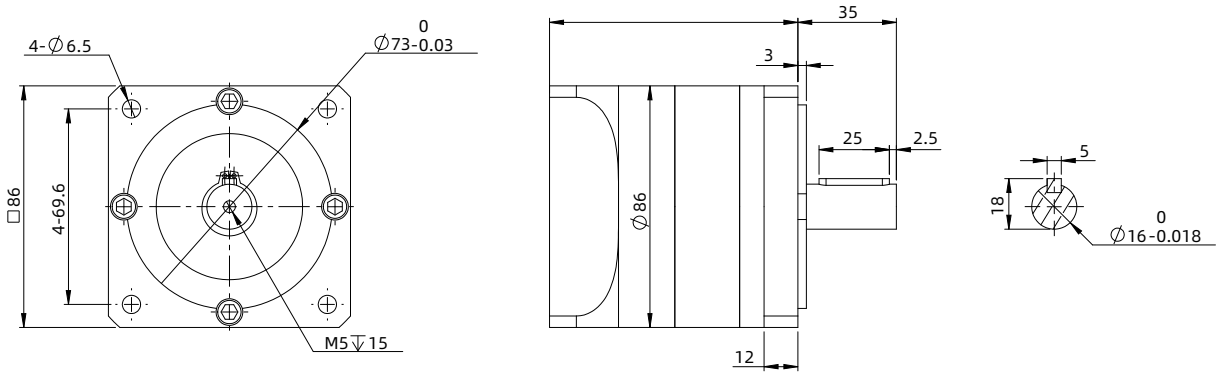

Housing material			Metal			
No load backlash			First stage 15 arcmin, second stage 25 arcmin			
Bearing			Ball bearing			
Ratio	Rated torque (N·m)	Peak torque (N·m)	Stages	Efficiency (%)	Length (mm)	Mass (g)
3 4 5 7	50	100	1	95	89	2080
16 20 25 28 35 40 50	80	160	2	90	112	2830

Accessories and Options

Encoder

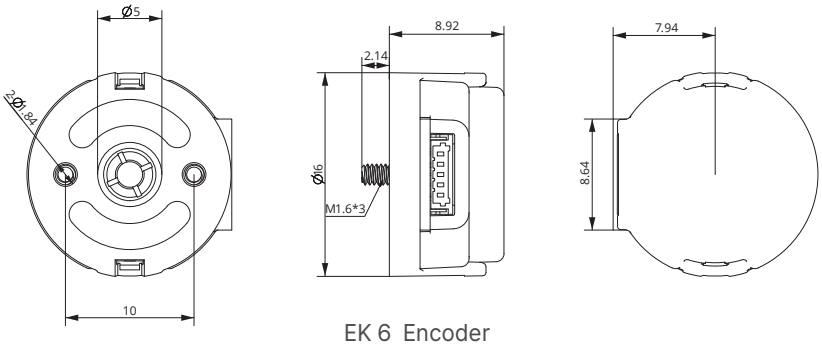

EK 6 Encoder

- **EK 6 Encoder (Used for size 6 motors) * No Index**

Resolution (CPR)	250	256	500	512	1000	1024	2000	2048	4000	4096
Single ended output	0	1	2	3	4	5	6	7	8	9

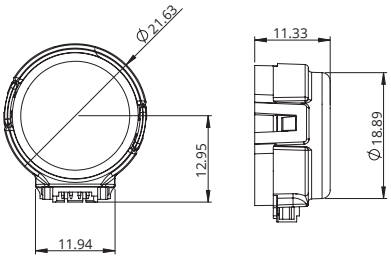

EK 1 Encoder - single ended output

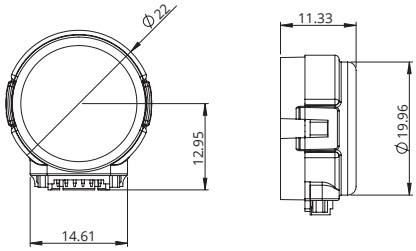

EK 1 Encoder - differential output

- **EK 1 Encoder (Used for size 8, 11, 14, 17 motors) * No Index**

Resolution (CPR)	100	108	120	125	128	200	250	256	300	360	400	500	1000	512	720	800
Single ended output	0	1	2	3	4	5	6	7	8	9	10	11	12	13	14	15
Differential output	A	B	C	D	E	F	G	H	I	J	K	L	M	N	O	P

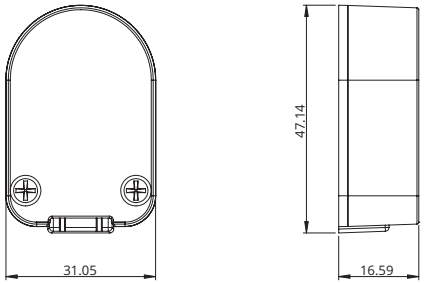

EK 2 Encoder - single ended output

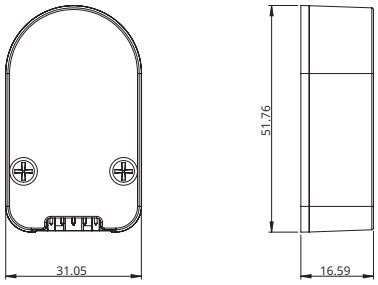

EK 2 Encoder - differential output

- **EK 2 Encoder (Used for size 14, 17, 23, 24 motors)**

Resolution (CPR)	50	100	192	200	250	256	360	400	500	720	900	1000	1250	2000	2500	4000	5000
Single ended output	0	1	2	3	4	5	6	7	8	9	10	11	12				
Differential output	A	B	C	D	E	F	G	H	I	J	K	L	M	N	O	P	Q

Accessories and Options

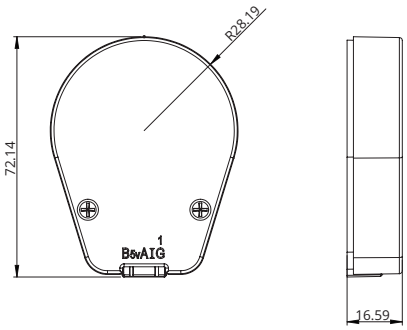

EK 3 Encoder - single ended output

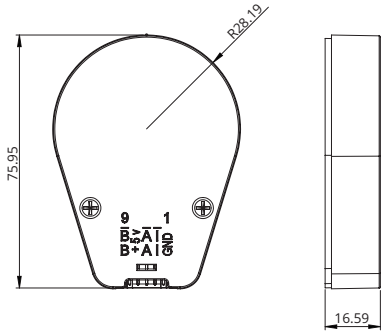

EK 3 Encoder - differential output

- **EK 3 Encoder (Used for size 23, 24, 34 motors)**

Resolution (CPR)	64	100	200	500	1000	1800	2000	2500	3600	4000	5000	7200	8000	10000
Single ended output	0	1	2	3	4	5	6	7	8					
Differential output		A	B	C	D	E	F	G	H	I	J	K	L	M

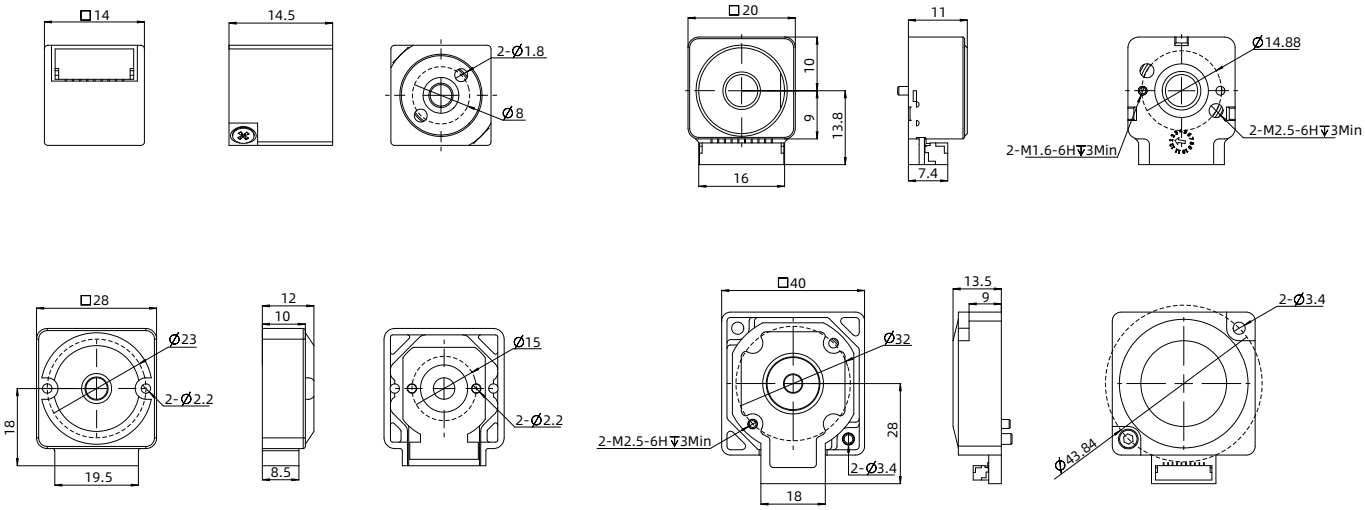

- **EK 7 Encoder (Used for size 6, 8, 11, 14, 17, 23, 24 External, Non-Captive motors)**

Resolution (CPR)	-	-	-	1000	-	-	2000	-	-	-
Single ended output	0	1	2	3	4	5	6	7	8	9
Differential output	A	B	C	D	E	F	G	H	I	J

Optional Brake (See page A-54)

C Hollow Shaft Stepper Motor

DINGS' provides 8 different sizes of Hollow shaft stepper motors from 14mm to 86mm.

Each size has multiple stack lengths. Single or dual shaft is standard but customized shaft options are also available. In addition hollow shaft encoders are available.

Customers are able to use hollow shaft motor to let something go thru hollow shaft like suction valve, cables or pumps especially pick & place application, electronics picker module or other applications.

Hollow shaft motor enables customers to design this kind of pick-up module in very compact design and small size of hollow steppers for example NEMA 6, NEMA8 or NEMA11, it can reduce total weight of picker module since light weight of motors.

For better positioning, lots of customers require closed loop function of hollow shaft motors and DINGS' has various hollow shaft type of encoders so it can be very helpful to realize light weight of motor and encoder package for higher accuracy of positioning.

Part number construction	C-2
Product overview	C-3
6 · 14 mm	C-4
8 · 20 mm	C-5
11 · 28 mm	C-6
14 · 35 mm	C-7
17 · 42 mm	C-8
23 · 57 mm	C-9
24 · 60 mm	C-10
34 · 86 mm	C-11

Part Number Construction

17 HS 2 034 - 4 D - 100 - 001

① ② ③ ④ ⑤ ⑥ ⑦ ⑧

① Motor Size

Motor Size (mm)	14	20	28	35	42	57	60	86
Motor Size (NEMA)	6	8	11	14	17	23	24	34

② Motor Type

HS = Hollow Shaft Stepper Motor

③ Motor Step Angle

2 = 2-phase, 1.8° step angle

4 = 2-phase, 0.9° step angle

④ Motor Length

034 = 34mm

⑤ Number of Lead Wires

4 = Bipolar (4-wire leads)

6 = Unipolar (6-wire leads)

⑥ Shaft Configuration

D = Double Shaft

S = Single Shaft

*For shaft customization, please contact DINGS'

⑦ Rated Current

XXX = Rated current ×100 (A)

⑧ Customer Sequence Number

Example

Naming code	17HS2034-4D-100-001
Description	Size 42 mm Hollow shaft stepper motor Step angle 1.8° Motor length 34 mm 4-wire leads Dual shaft Rated current 1.0A Customization sequence 001

Product Overview

Size (mm)	Motor length (mm)	Holding torque (N·m)	Inner diameter(mm)	Power consumption (W)
6 (14*14)	32	0.005	2.5	2
8 (20*20)	28	0.014	3	2.4
	38	0.02	3	4
11 (28*28)	33	0.053	5	4.2
	45	0.1	5	7.5
14 (35*35)	33.6	0.15	8	5.7
	45.6	0.32	8	9.1
17 (42*42)	34.1	0.25	8	7
	48.1	0.48	8	13
23 (57*57)	45	0.8	12	13
	65	1.6	12	25
24 (60*60)	47	0.9	12	16.2
	68	1.9	12	19.2
34 (86*86)	76	4.5	16	31

Size 6 (14mm) Series

The size 6 [14mm] Hollow Shaft Stepper Motor is the smallest hollow shaft motor from DINGS' and offers up to 0.005 N·m of holding torque.
For special windings or shaft customization,
please contact DINGS' for further information.

Motor Characteristics

Motor No.	Rated voltage (V)	Current (A [RMS])	Resistance (Ω)	Inductance (mH)	Holding torque (N·m)	Detent torque (N·m)	Motor length (mm)
06HS2030	6.6	0.25	23	4.0	0.005	0.001	32

Dimensional Drawings

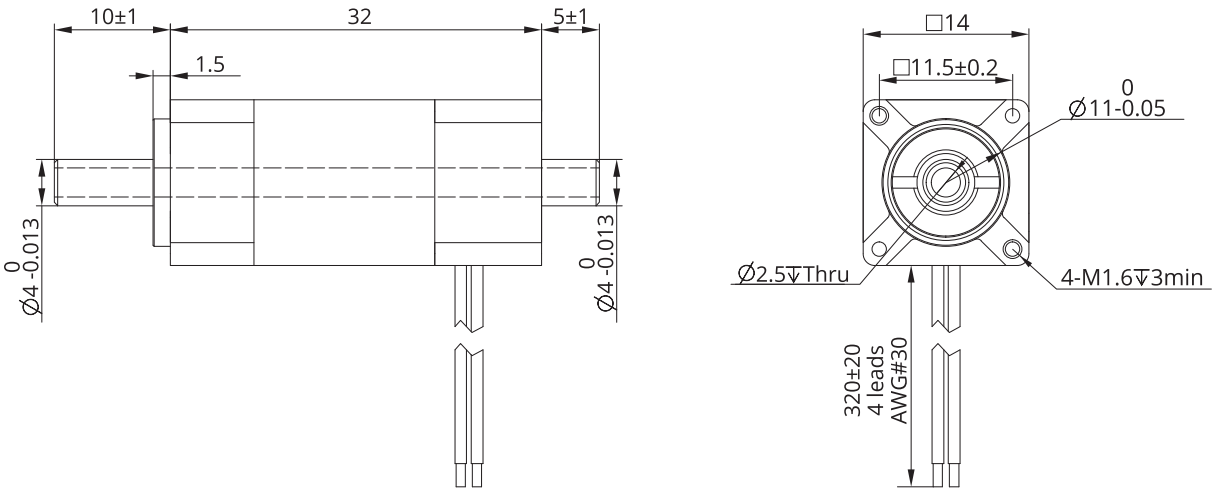

Torque Performance Curves

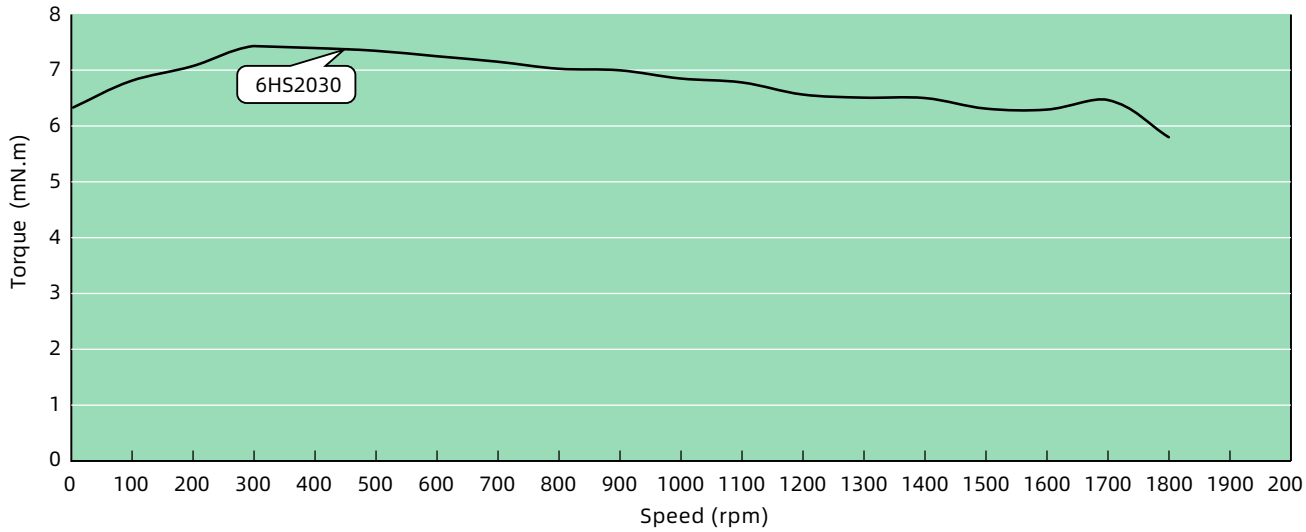

TEST CONDITION

Tested at 24VDC with DS-OLS8-FRS4 bipolar chopper drive at rated current (RMS).
Motor torque varies with voltage and driver conditions. A 50% safety margin is recommended.

Size 8 (20mm) Series

The size 8 [20mm] Hollow Shaft Stepper Motor has Max. 0.02N·m of holding torque.
For special windings or shaft customization,
hollow-shaft encoder assembly options are also available,
please contact DINGS' for further information.

Motor Characteristics

Motor No.	Rated voltage (V)	Current (A [RMS])	Resistance (Ω)	Inductance (mH)	Holding torque (N·m)	Detent torque (N·m)	Motor length (mm)
8HS2028	2.55	0.5	5.1	1.5	0.014	0.002	28
8HS2038	4.4	0.5	8.8	2.7	0.020	0.004	38

Dimensional Drawings

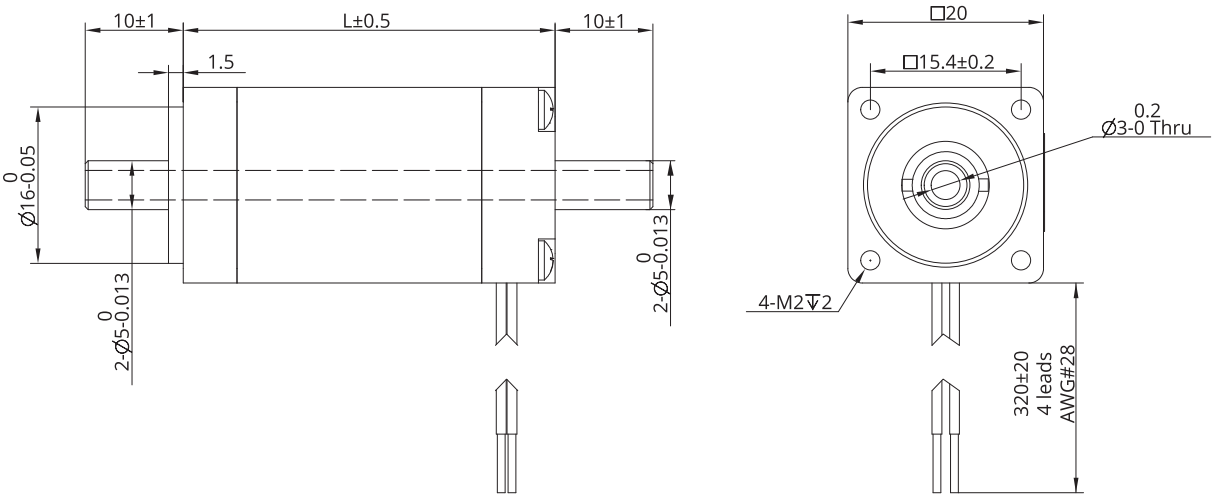

Torque Performance Curves

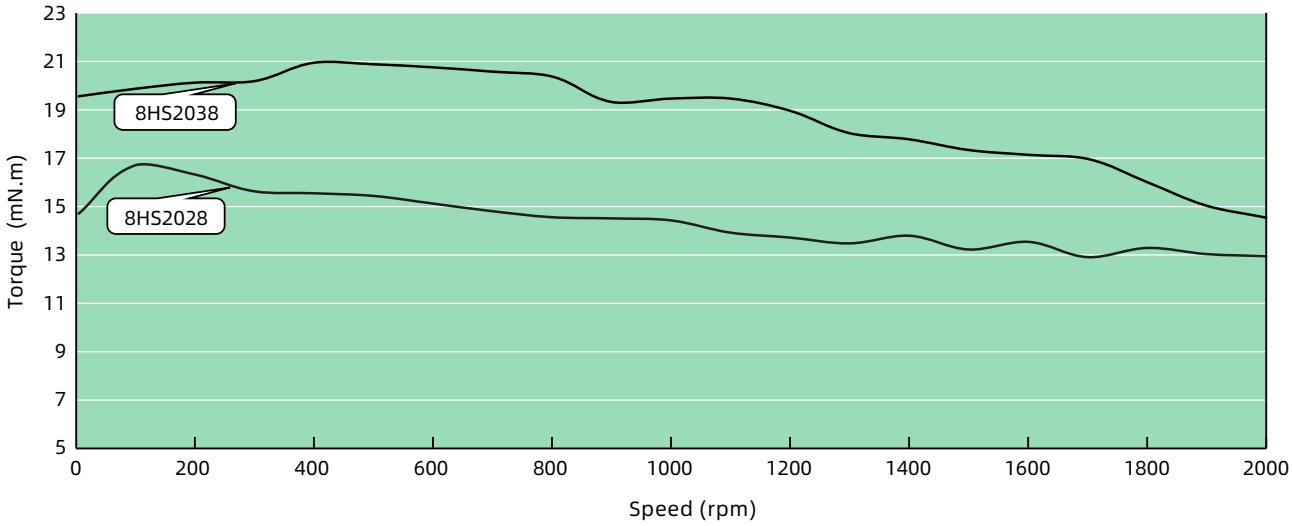

TEST CONDITION

Tested at 24VDC with DS-OLS8-FRS4 bipolar chopper drive at rated current (RMS).
Motor torque varies with voltage and driver conditions. A 50% safety margin is recommended.

Size 11 (28mm) Series

The size 11 [28mm] Hollow Shaft Stepper Motor has Max. 0.1N·m of holding torque.
For special windings or shaft customization,
hollow-shaft encoder assembly options are also available,
please contact DINGS' for further information.

Motor Characteristics

Motor No.	Rated voltage (V)	Current (A [RMS])	Resistance (Ω)	Inductance (mH)	Holding torque (N·m)	Detent torque (N·m)	Motor length (mm)
11HS2033	2.1	1	2.1	1.5	0.053	0.003	33
11HS2045	4.1	1	4.1	4	0.1	0.004	45

Dimensional Drawings

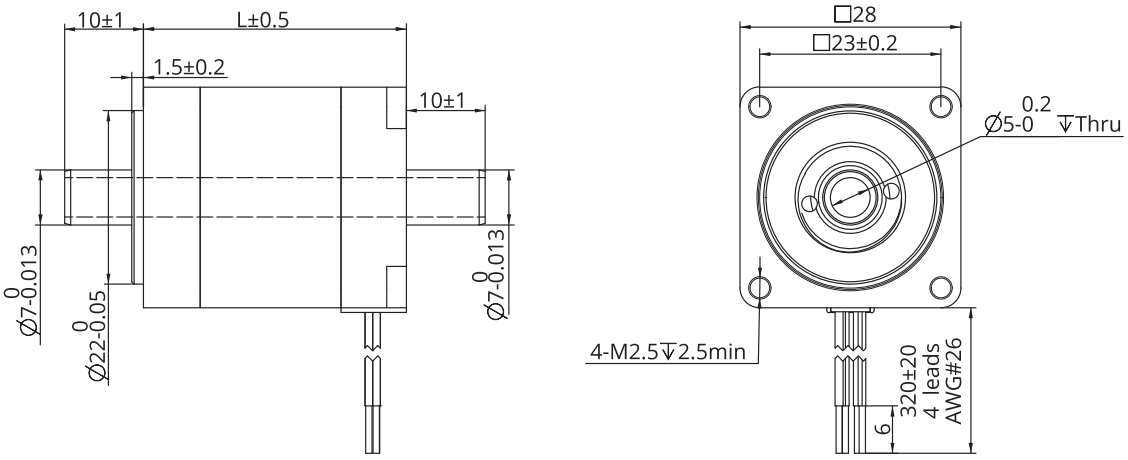

Torque Performance Curves

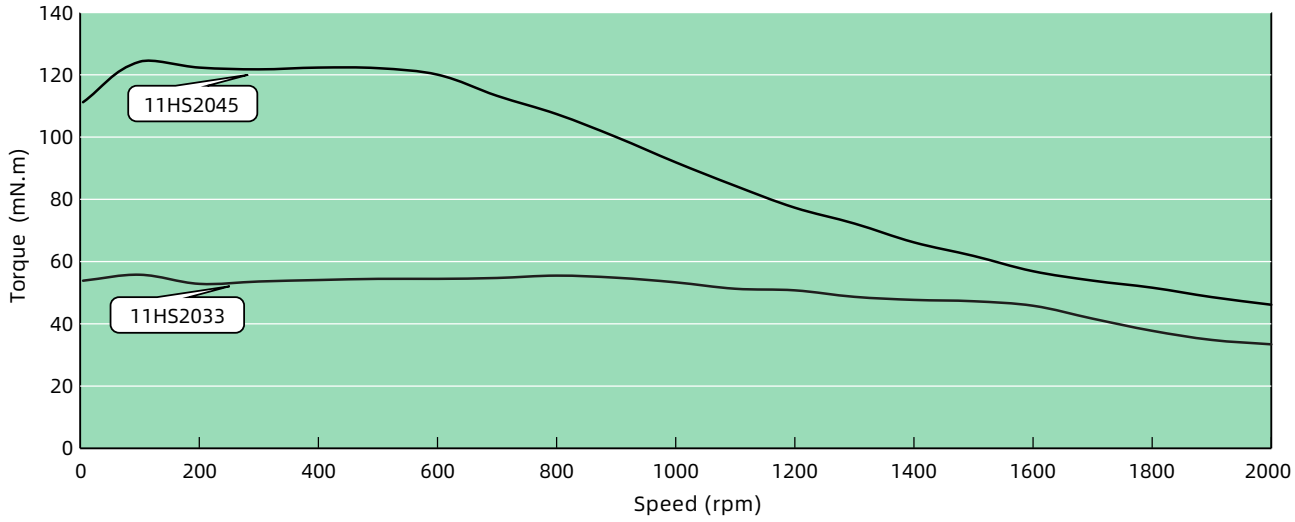

TEST CONDITION

Tested at 24VDC with DS-OLS8-FRS4 bipolar chopper drive at rated current (RMS).
Motor torque varies with voltage and driver conditions. A 50% safety margin is recommended.

Size 14 (35mm) Series

The size 14 [35mm] Hollow Shaft Stepper Motor has Max. 0.32N·m of holding torque.
For special windings or shaft customization,
hollow-shaft encoder assembly options are also available,
please contact DINGS' for further information.

Motor Characteristics

Motor No.	Rated voltage (V)	Current (A [RMS])	Resistance (Ω)	Inductance (mH)	Holding torque (N·m)	Detent torque (N·m)	Motor length (mm)
14HS2033	3.5	1	3.5	3.6	0.15	0.006	33.6
14HS2045	6	1	6	7.8	0.32	0.01	45.6

Dimensional Drawings

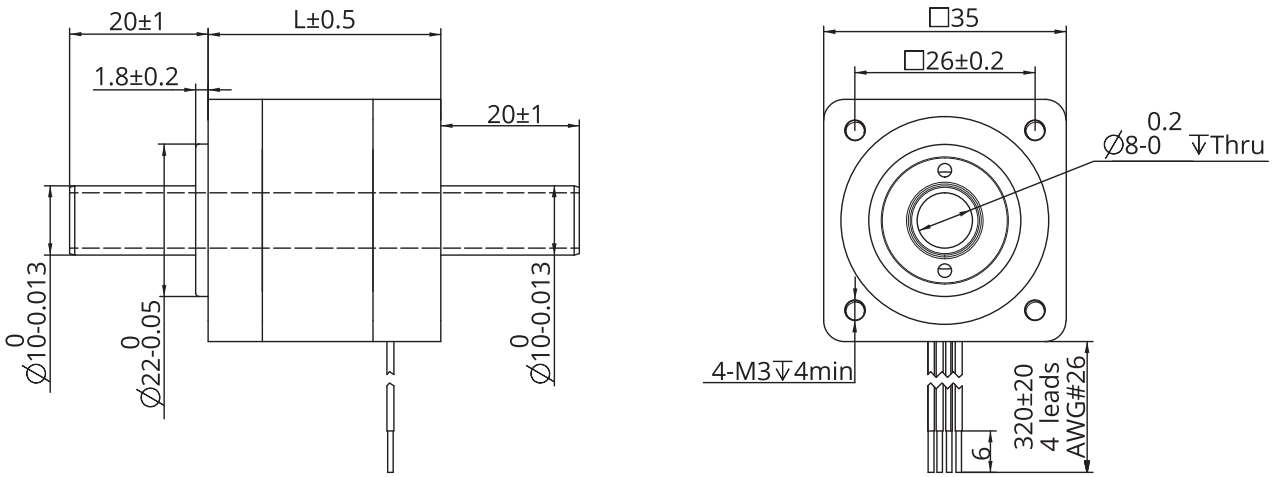

Torque Performance Curves

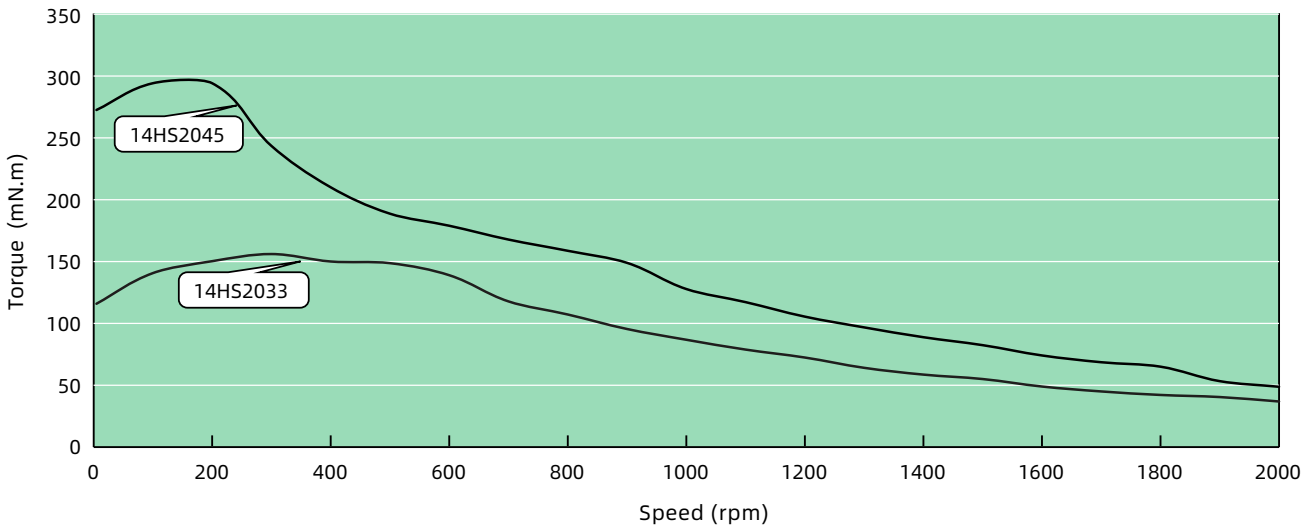

TEST CONDITION

Tested at 24VDC with DS-OLS8-FRS4 bipolar chopper drive at rated current (RMS).
Motor torque varies with voltage and driver conditions. A 50% safety margin is recommended.

Size 17 (42mm) Series

The size 17 [42mm] Hollow Shaft Stepper Motor has Max. 0.48N·m of holding torque.
For special windings or shaft customization,
hollow-shaft encoder assembly options are also available,
please contact DINGS' for further information.

Motor Characteristics

Motor No.	Rated voltage (V)	Current (A [RMS])	Resistance (Ω)	Inductance (mH)	Holding torque (N·m)	Detent torque (N·m)	Motor length (mm)
17HS2034	3.8	1	3.6	4.5	0.25	0.014	34.1
17HS2048	2.25	2.5	1	1.8	0.48	0.02	48.1

Dimensional Drawings

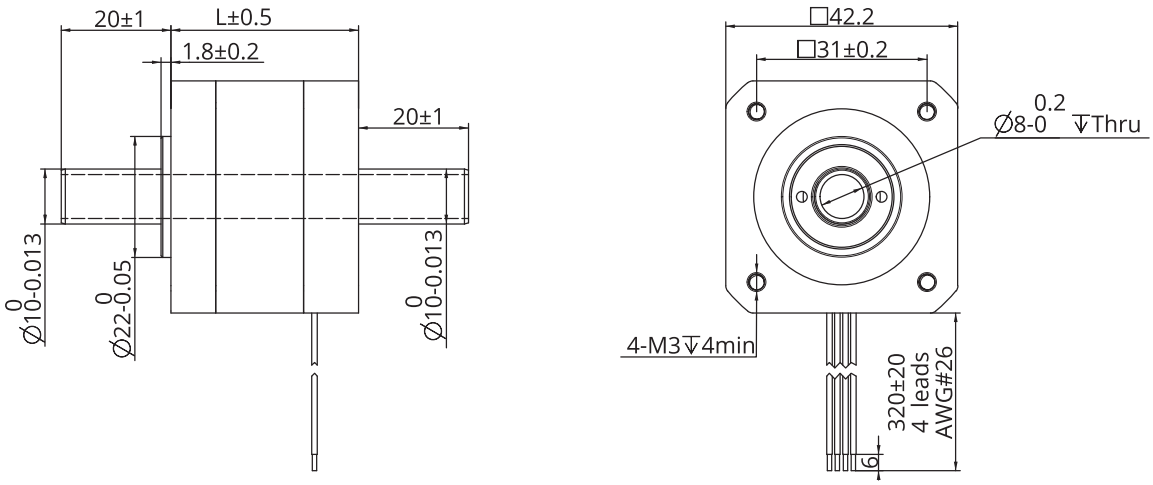

Torque Performance Curves

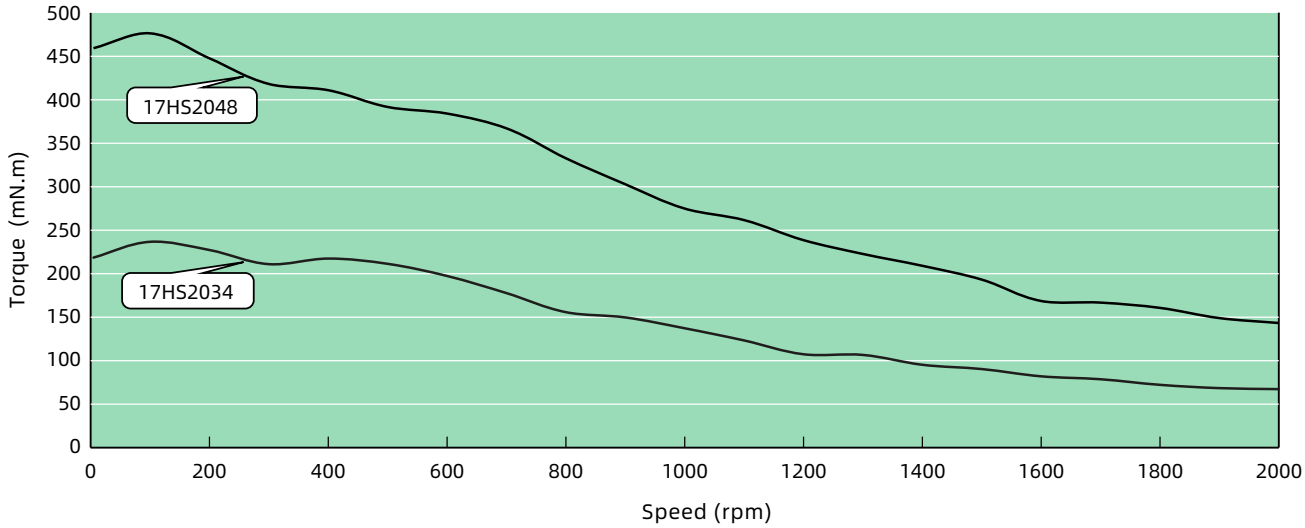

TEST CONDITION

Tested at 24VDC with DS-OLS8-FRS4 bipolar chopper drive at rated current (RMS).
Motor torque varies with voltage and driver conditions. A 50% safety margin is recommended.

Size 23 (57mm) Series

The size 23 [57mm] Hollow Shaft Stepper Motor has Max. 1.5N·m of holding torque.
For special windings or shaft customization,
hollow-shaft encoder assembly options are also available,
please contact DINGS' for further information.

Motor Characteristics

Motor No.	Rated voltage (V)	Current (A [RMS])	Resistance (Ω)	Inductance (mH)	Holding torque (N·m)	Detent torque (N·m)	Motor length (mm)
23HS2045	3.5	2	1.75	4.1	0.8	0.03	45
23HS2065	5	2.5	1.9	5.5	1.5	0.06	65

Dimensional Drawings

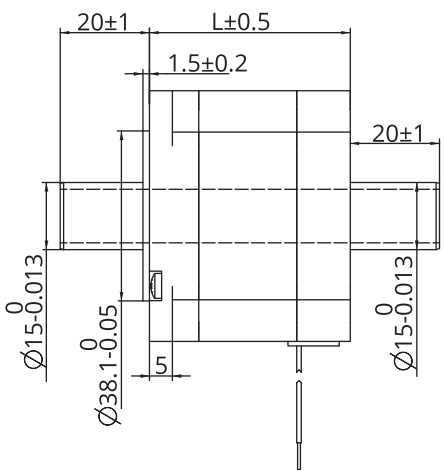

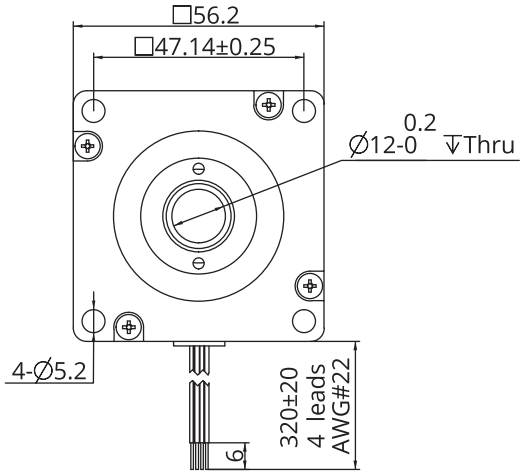

Torque Performance Curves

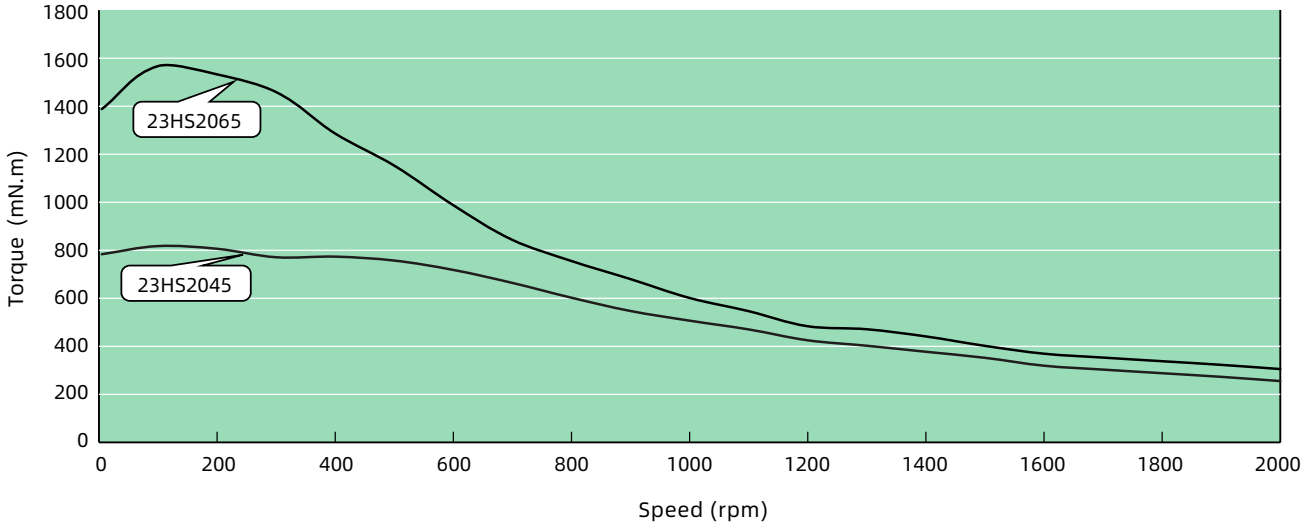

TEST CONDITION

Tested at 48VDC with DS-OLS8-FRS4 bipolar chopper drive at rated current (RMS).
Motor torque varies with voltage and driver conditions. A 50% safety margin is recommended.

Size 24 (60mm) Series

The size 24 [60mm] Hollow Shaft Stepper Motor has Max. 1.8N·m of holding torque.
For special windings or shaft customization,
hollow-shaft encoder assembly options are also available,
please contact DINGS' for further information.

Motor Characteristics

Motor No.	Rated voltage (V)	Current (A [RMS])	Resistance (Ω)	Inductance (mH)	Holding torque (N·m)	Detent torque (N·m)	Motor length (mm)
24HS2047	1.52	4	0.4	0.9	0.9	0.03	47
24HS2068	2.4	4	0.6	1.9	1.8	0.06	68

Dimensional Drawings

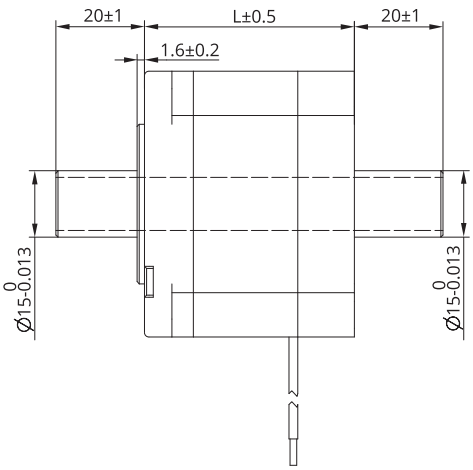

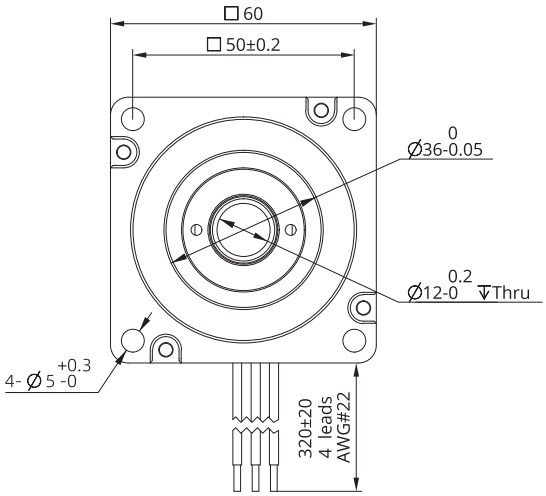

Torque Performance Curves

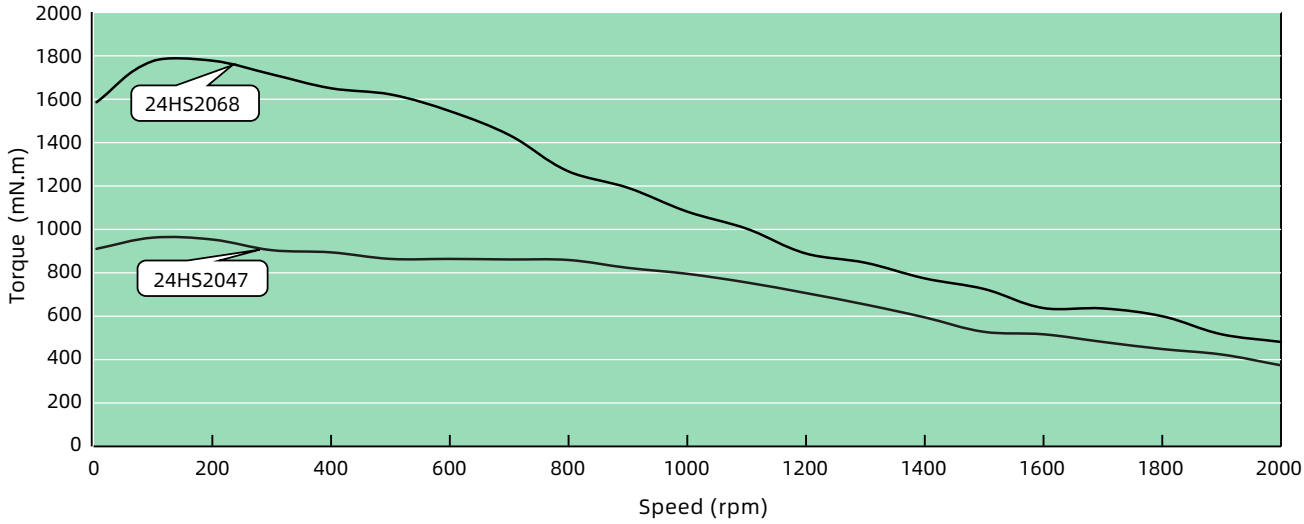

TEST CONDITION

Tested at 48VDC with DS-OLS8-FRS4 bipolar chopper drive at rated current (RMS).
Motor torque varies with voltage and driver conditions. A 50% safety margin is recommended.

Size 34 (86mm) Series

The size 34 [86mm] Hollow Shaft Stepper Motor has Max. 4.5N·m of holding torque.
For special windings or shaft customization,
hollow-shaft encoder assembly options are also available,
please contact DINGS' for further information.

Motor Characteristics

Motor No.	Rated voltage (V)	Current (A [RMS])	Resistance (Ω)	Inductance (mH)	Holding torque (N·m)	Detent torque (N·m)	Motor length (mm)
34HS2076	5.7	3	1.9	15	4.5	0.095	76

Dimensional Drawings

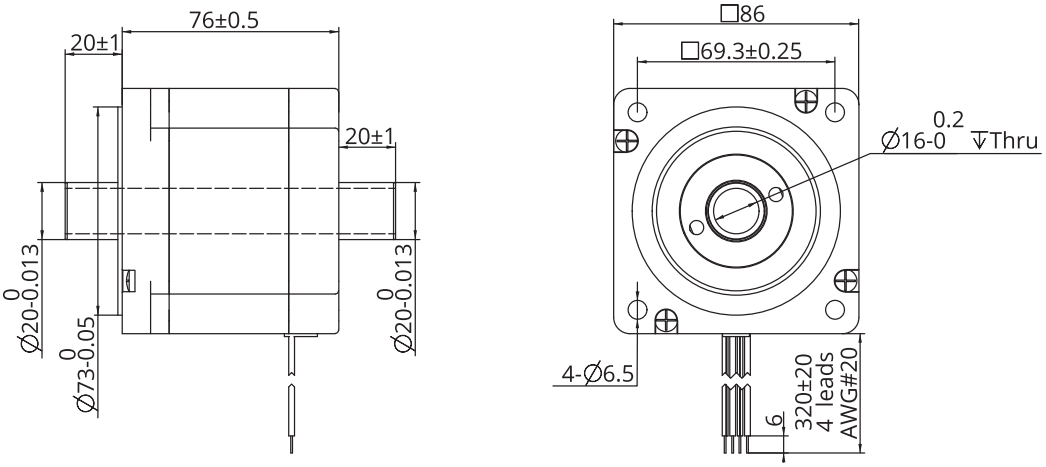

Torque Performance Curves

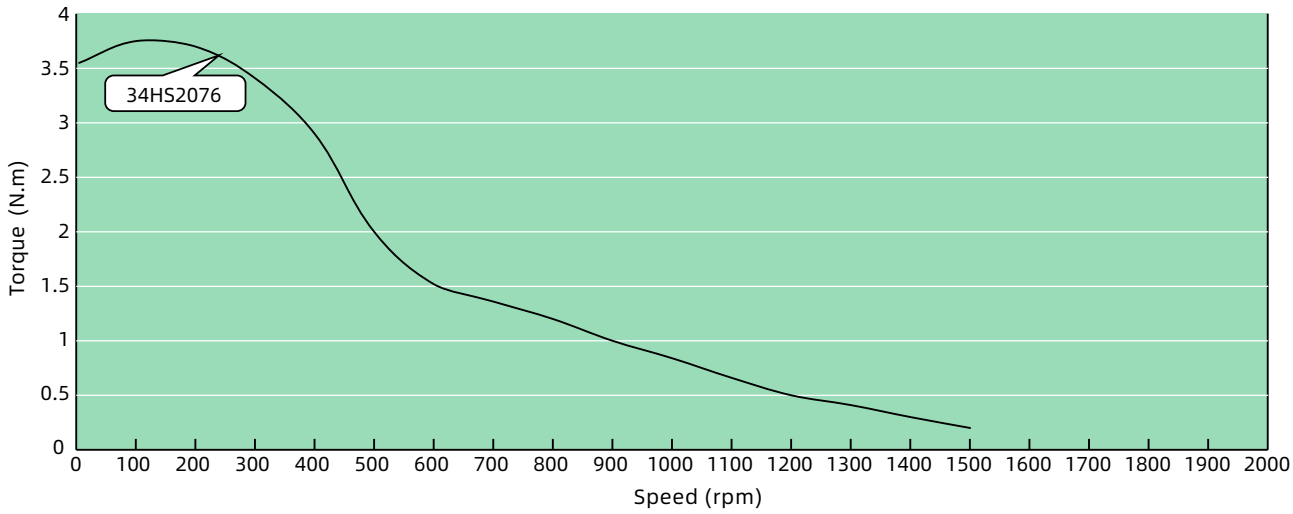

TEST CONDITION

Tested at 48VDC with DS-OLS8-FPD bipolar chopper drive at rated current (RMS).
Motor torque varies with voltage and driver conditions. A 50% safety margin is recommended.

D Brushed DC Motor

DINGS' Brushed DC motors have low mechanical loss, high power conversion efficiency but relatively save energy.

The speed of Brushed DC motor can quickly respond to change of voltage and meet the requirements of high speed and high precision control.

Brushed DC motor's torque is proportional to the current, it has very high starting performance.

DINGS' Brushed DC motors can be designed by Ferrite, Aluminium, Nickel Cobalt, Rare Earth magnet or Permanent Magnet. Also DINGS' can adopt two different brushes as Graphite or Metal Graphite.

In addition, DINGS' can customize Brushed DC motors in various ways with gearbox, encoder or DINGS' also can design Brush DC linear actuators for wide applications.

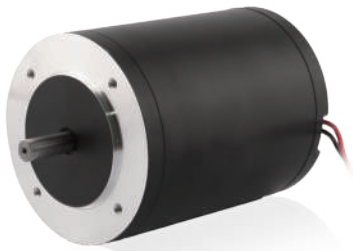

Part number construction	D-2
42 mm	D-3
50 mm	D-5
63 mm	D-7
80 mm	D-9
Accessories and Options	D-11

Part Number Construction

00	ZYT	C	00	T	C	B	E	A	-	51	S	N	S	-1
①	②	③	④	⑤	⑥	⑦	⑧	⑨		⑩	⑪	⑫	⑬	⑭

① Motor Size

Motor Size(mm)	42	50	63	80

② Product Name

ZYT = Slotted Brushed DC Motor (Ferrite)

ZY = Slotted Brushed DC Motor (Aluminum nickel cobalt)

ZYN = Slotted Brushed DC Motor (Rare earth)

LY = Permanent magnet DC torque motor

③ Motor Shape

C = Circular Type

S = Square Type

④ Motor Length

Unit : mm

When the length involves decimal points, use "_" instead

⑤ Motor Casing

L = Aluminum

T = Stainless steel / Iron

X = No housing

⑥ Brush Type

C = Graphite brush

P = Metal graphite brush

⑦ Option

EKX = Encoder (X = Encoder Resolution)

B = Brake

GX = Gearbox (X = Gear Ratio)

Note: When selecting multiple options, please arrange them in alphabetical order (e.g., "BEG").

⑧ Structure

E = External type

N = Non-Captive type

C = Electric Cylinder (Captive) type

K = Kaptive type

⑨ Lead Screw Code

Please refer to the lead screw code selection table

⑩ Screw Length / Stroke

Kaptive = stroke distance

Non-captive = total length of screw

External = screw extension length from the mounting flange

⑪ Screw Surface Treatment

T = Teflon coating

S = Standard (No teflon coating)

⑫ End Machining

M = Metric

U = UNC

S = Smooth

C = Customization

N = None

⑬ Nut Style

S = Standard flange nut

A = Anti-backlash nut

C = Customized nut

⑭ Customer Sequence Number

Example

Part Number	42ZYTC100-1
Description	Brushed DC Ferrite Motor Circular type Motor length 100mm Customization No.1

42mm Series

The 42ZYTC85-1 is a 24V brushed DC motor capable of operating up to 3,150 RPM.

It delivers 57 mN·m rated torque and can be customized with gearboxes or integrated into various linear actuator solutions.

Motor Characteristics

Motor part number	42ZYTC85-1	
Rated voltage	V	24
Rated torque	mN·m	57
Rated speed	RPM	3150
Rated current	A	1.45
No-load speed	RPM	4000
No-load current	A	0.3
Rated power	W	19
Stall torque	mN·m	256
Stall current	A	5.5
Torque constant	mN·m/A	64.5
Back-EMF constant	V/Krpm	6.7
Terminal resistance	Ω	4.65
Terminal inductance	mH	3
Rotor inertia	g·cm²	110
Starting torque	mN·m	20
Noise (ambient noise 20dB, test distance 1m)	dB	<50
Life span	H	>2500
Insulation resistance	-	100M Ω/250V
Duty cycle	-	S1
Motor weight	Kg	0.43

For customized options, please contact DINGS' or your local distributor

42mm Series

Dimensional Drawings

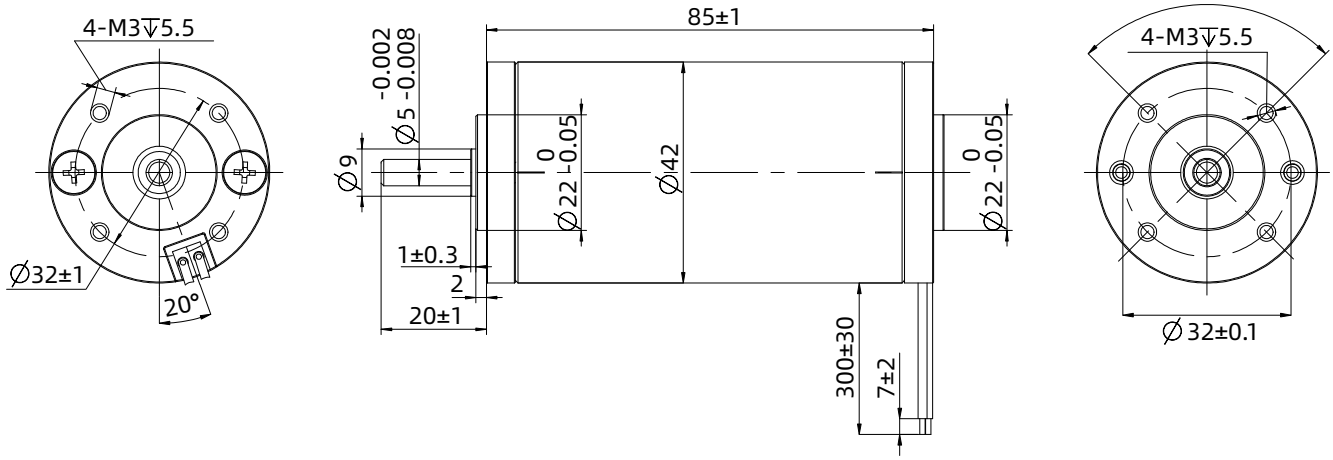

Torque Performance Curves

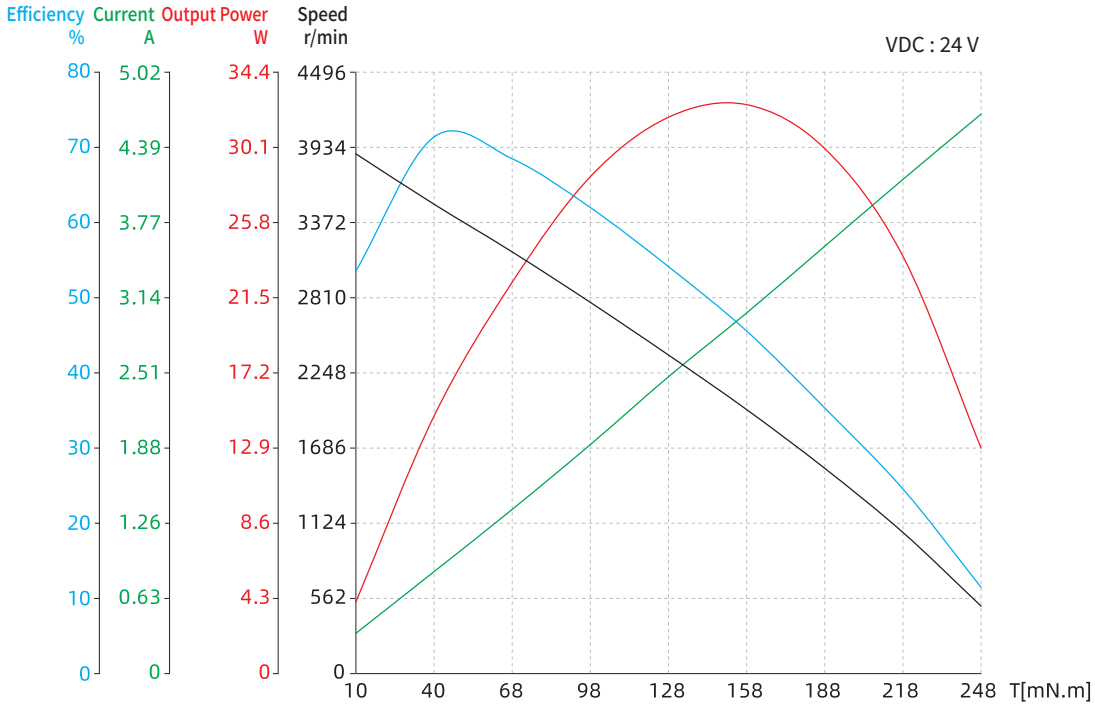

Note : All drawings are 1st-angle projection - ISO Compliant (3D models available)

50mm Series

The 50ZYTC60-1 is a 24V brushed DC motor capable of operating up to 1,700 RPM.

It delivers 22.5 mN·m rated torque and can be customized with gearboxes or integrated into various linear actuator solutions.

Motor Characteristics

Motor part number	50ZYTC60-1	
Rated voltage	V	24
Rated torque	mN·m	22.5
Rated speed	RPM	1700
Rated current	A	0.5
No-load speed	RPM	2300
No-load current	A	0.2
Rated power	W	4
Stall torque	mN·m	80
Stall current	A	1.1
Torque constant	mN·m/A	86.4
Back-EMF constant	V/Krpm	9.05
Terminal resistance	Ω	20.2
Terminal inductance	mH	11
Rotor inertia	g·cm²	130
Starting torque	mN·m	32
Noise (ambient noise 20dB, test distance 1m)	dB	<48
Life span	H	>2500
Insulation resistance	-	100M Ω/250V
Duty cycle	-	S1
Motor weight	Kg	0.38

For customized options, please contact DINGS' or your local distributor

50mm Series

Dimensional Drawings

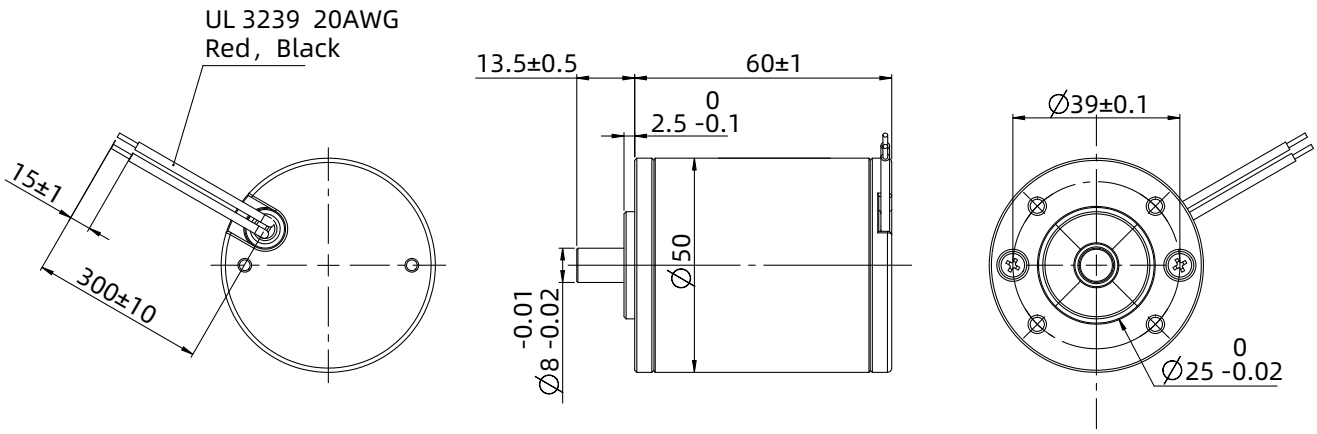

Torque Performance Curves

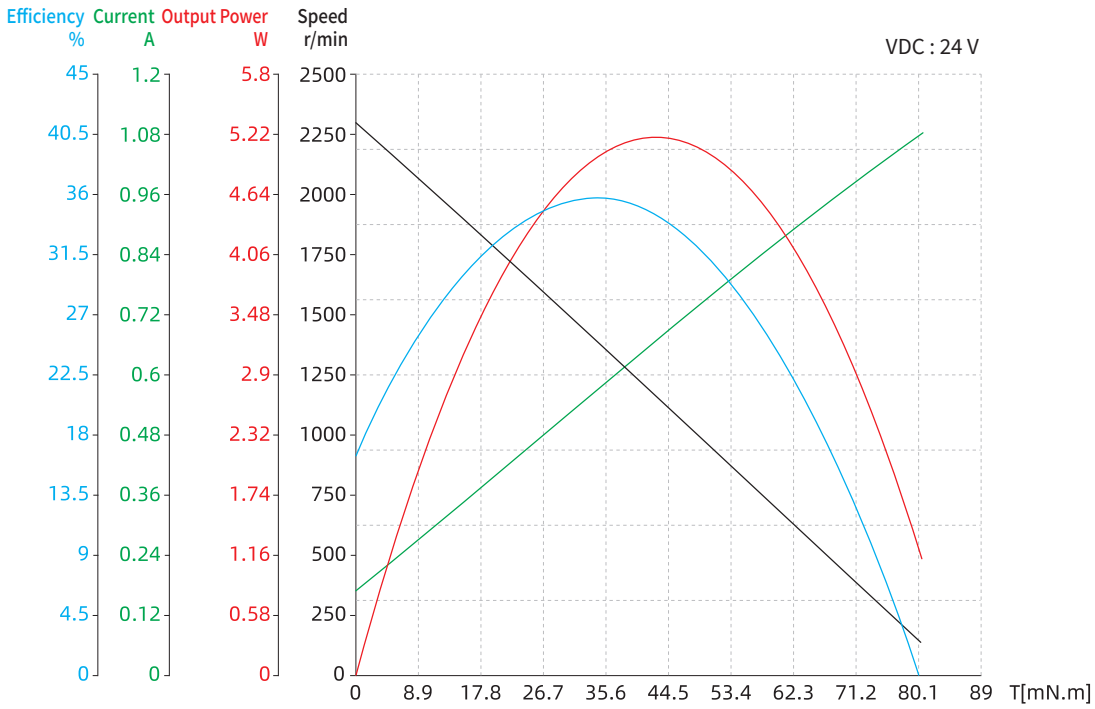

Note : All drawings are 1st-angle projection - ISO Compliant (3D models available)

63mm Series

The 63ZYTC125-1 is a 24V brushed DC motor capable of operating up to 3,200 RPM.

It delivers 0.27 N·m rated torque and can be customized with gearboxes or integrated into various linear actuator solutions.

Motor Characteristics

Motor part number	63ZYTC125-1	
Rated voltage	V	24
Rated torque	N·m	0.27
Rated speed	RPM	3200
Rated current	A	6.0
No-load speed	RPM	3650
No-load current	A	1.0
Rated power	W	90
Stall torque	N·m	1.6
Stall current	A	29
Torque constant	mN·m/A	62
Back-EMF constant	V/Krpm	6.01
Terminal resistance	Ω	0.82
Terminal inductance	mH	1.6
Rotor inertia	kg·cm²	0.8
Starting torque	mN·m	42
Noise (ambient noise 20dB, test distance 1m)	dB	<50
Life span	H	>3000
Insulation resistance	-	100M Ω/250V
Duty cycle	-	S1
Motor weight	Kg	1.6

For customized options, please contact DINGS' or your local distributor

63mm Series

Dimensional Drawings

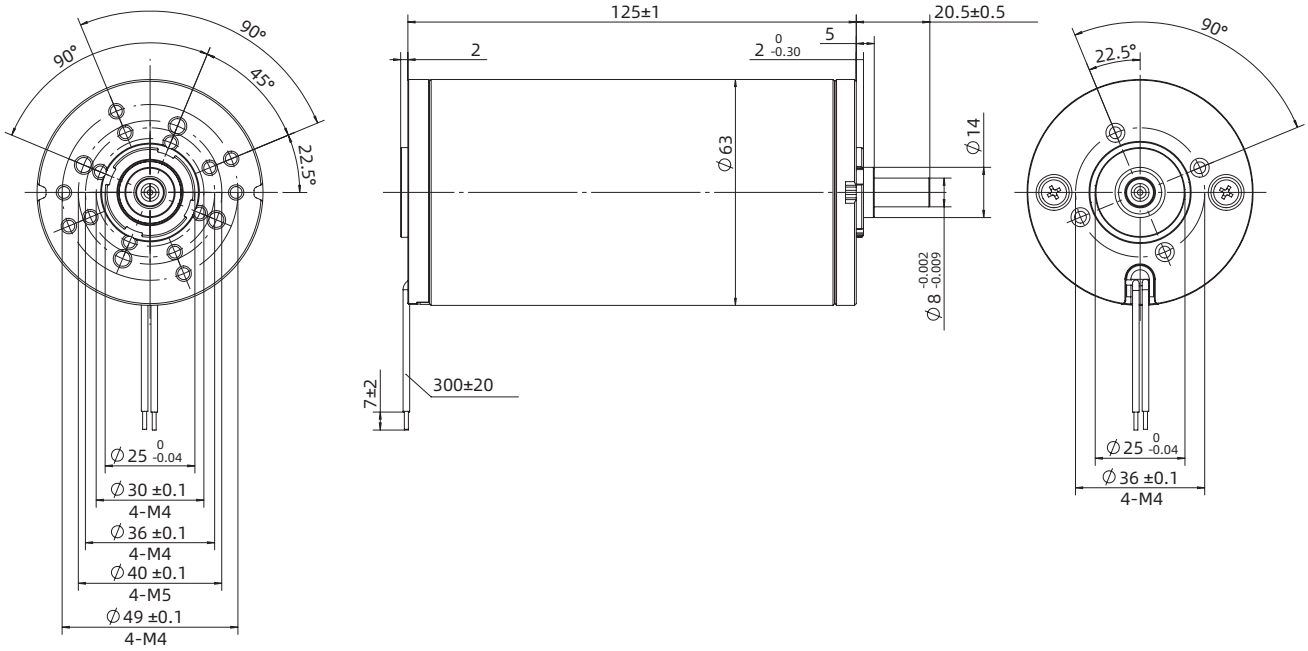

Torque Performance Curves

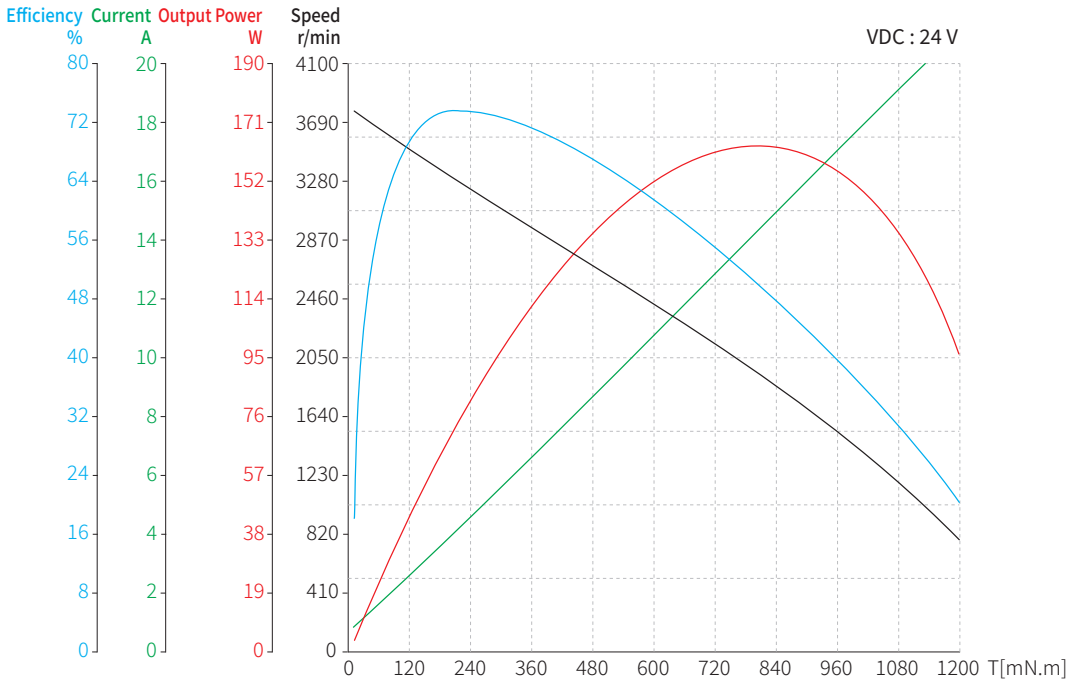

Note : All drawings are 1st-angle projection - ISO Compliant (3D models available)

80mm Series

The 80ZYTC102-1 is a 24V brushed DC motor capable of operating up to 2,500 RPM.

It delivers 0.25 N·m rated torque and can be customized with gearboxes or integrated into various linear actuator solutions.

Motor Characteristics

Motor part number	80ZYTC102-1	
Rated voltage	V	24
Rated torque	N·m	0.25
Rated speed	RPM	2500
Rated current	A	4.5
No-load speed	RPM	3200
No-load current	A	0.6
Rated power	W	65
Stall torque	N·m	1.2
Stall current	A	19
Torque constant	mN·m/A	61
Back-EMF constant	V/Krpm	6.4
Terminal resistance	Ω	1.3
Terminal inductance	mH	1.8
Rotor inertia	kg·cm²	1.6
Starting torque	mN·m	52
Noise (ambient noise 20dB, test distance 1m)	dB	<50
Life span	H	>3000
Insulation resistance	-	100M Ω/250V
Duty cycle	-	S1
Motor weight	Kg	1.7

For customized options, please contact DINGS' or your local distributor

80mm Series

Dimensional Drawings

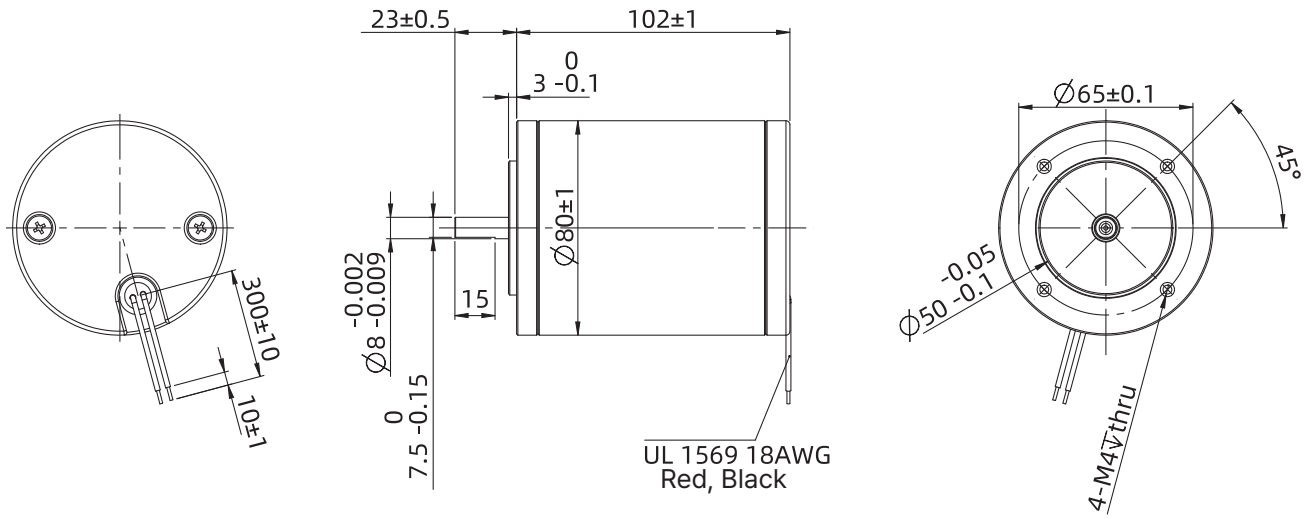

Torque Performance Curves

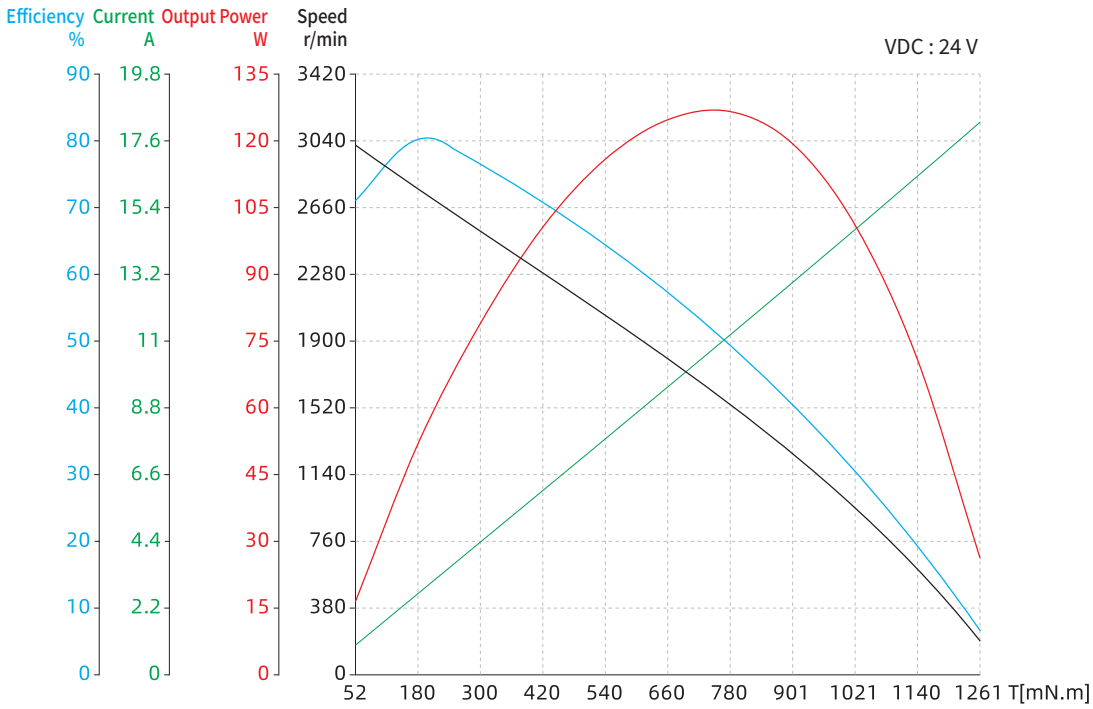

Note : All drawings are 1st-angle projection - ISO Compliant (3D models available)

Accessories and Options

Precision planetary gearbox

6PGX

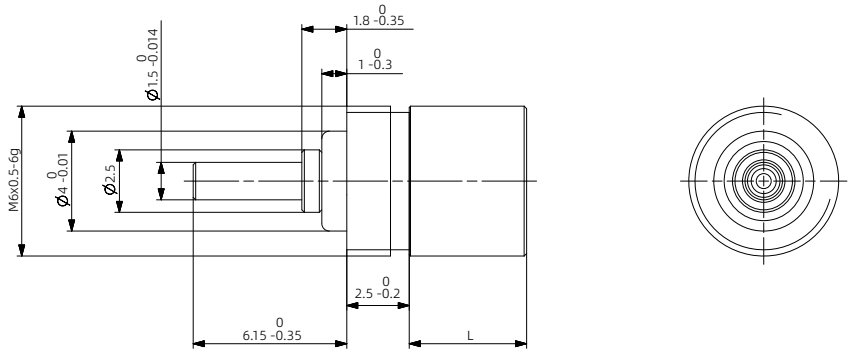

Stage	-	Stage 1	Stage 2	Stage 3
Gear ratio	X : 1	3.9	15	57
Max. backlash	°	1.8	2.0	2.2
Max. continuous output power	W	0.65	0.4	0.2
Max. peak output power	W	0.8	0.5	0.25
Max. continuous input speed	rpm	20000	20000	20000
Max. peak input speed	rpm	25000	25000	25000
Max. continuous torque	N·m	0.002	0.005	0.01
Max. peak torque	N·m	0.005	0.01	0.02
Max. efficiency	%	88	77	68
Weight	g	1.6	2	2.4
Gearbox length L	mm	4.7	7.2	9.7

8PGX

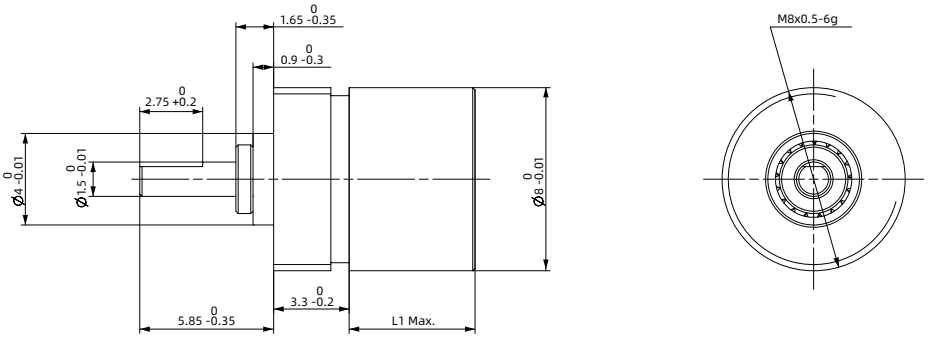

Stage	-	Stage 1	Stage 2	Stage 3
Gear ratio	X : 1	4	16	64
Max. backlash	°	1.8	2.0	2.2
Max. continuous output power	W	0.84	0.52	0.4
Max. peak output power	W	1.05	0.65	0.5
Max. continuous input speed	rpm	14000	14000	14000
Max. peak input speed	rpm	20000	20000	20000
Max. continuous torque	N·m	0.01	0.02	0.06
Max. peak torque	N·m	0.015	0.03	0.09
Max. efficiency	%	90	81	72
Weight	g	2.6	3.2	3.8
Gearbox length L	mm	5.5	8.1	10.7

Accessories and Options

10PGX

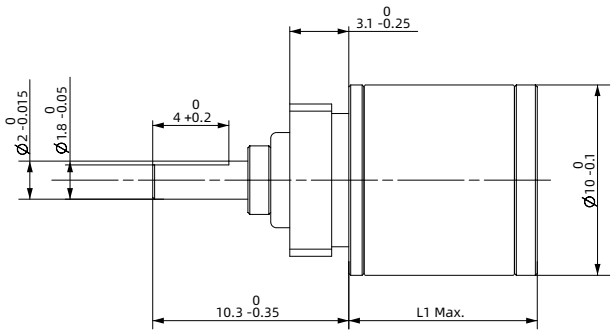

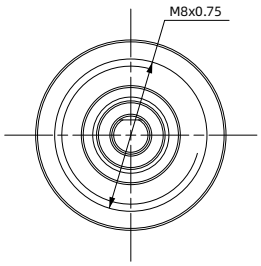

Stage	-	Stage 1	Stage 2	Stage 3	Stage 4
Gear ratio	X : 1	4.25	18	77	326
Max. backlash	°	1.5	1.8	2.0	2.2
Max. continuous output power	W	1.6	1.2	1.0	0.4
Max. peak output power	W	2	1.5	1.3	0.5
Max. continuous input speed	rpm	14000	14000	14000	14000
Max. peak input speed	rpm	18000	18000	18000	18000
Max. continuous torque	N·m	0.01	0.03	0.10	0.15
Max. peak torque	N·m	0.02	0.05	0.15	0.2
Max. efficiency	%	90	81	73	65
Weight	g	6.8	7.3	7.8	8.3
Gearbox length L	mm	10.1	13.6	17.1	20.6

12PGX

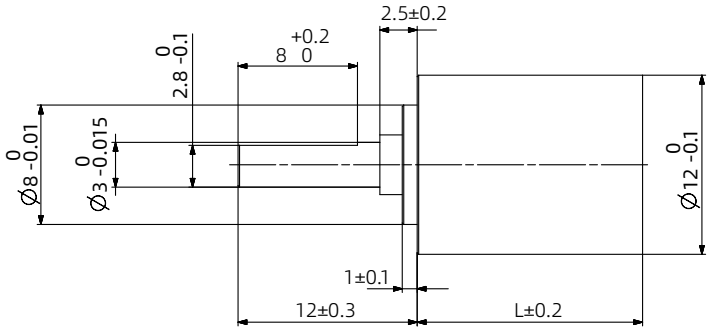

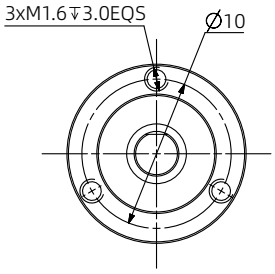

Stage	-	Stage 1	Stage 2	Stage 3	Stage 4
Gear ratio	X : 1	4.3	18.4	79	337
Max. backlash	°	1.2	1.5	1.8	2.1
Max. continuous output power	W	2.0	1	0.5	0.25
Max. peak output power	W	2.5	1.25	0.65	0.3
Max. continuous input speed	rpm	16000	16000	16000	16000
Max. peak input speed	rpm	20000	20000	20000	20000
Max. continuous torque	N·m	0.08	0.11	0.14	0.17
Max. peak torque	N·m	0.1	0.14	0.18	0.21
Max. efficiency	%	90	80	75	65
Weight	g	9	12	15	18
Gearbox length L	mm	11.3	15.1	18.9	22.7

Accessories and Options

14PGX

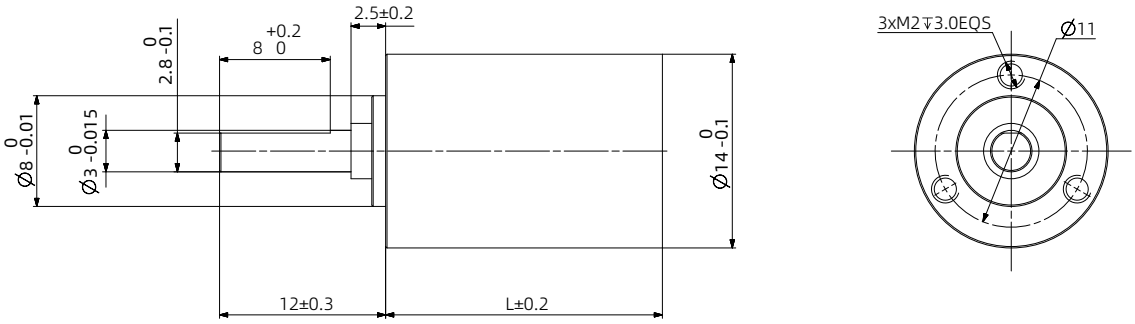

Stage	-	Stage 1	Stage 2	Stage 3	Stage 4
Gear ratio	X : 1	4.3	18.4	79	337
Max. backlash	°	1.1	1.3	1.45	1.7
Max. continuous output power	W	4.0	2.0	1.0	0.4
Max. peak output power	W	5.0	2.5	1.25	0.5
Max. continuous input speed	rpm	14000	16000	16000	16000
Max. peak input speed	rpm	18000	20000	20000	20000
Max. continuous torque	N·m	0.16	0.2	0.25	0.3
Max. peak torque	N·m	0.2	0.25	0.31	0.38
Max. efficiency	%	90	80	75	65
Weight	g	11	15	19	23
Gearbox length L	mm	11.8	16.1	20.4	24.7

16PGX

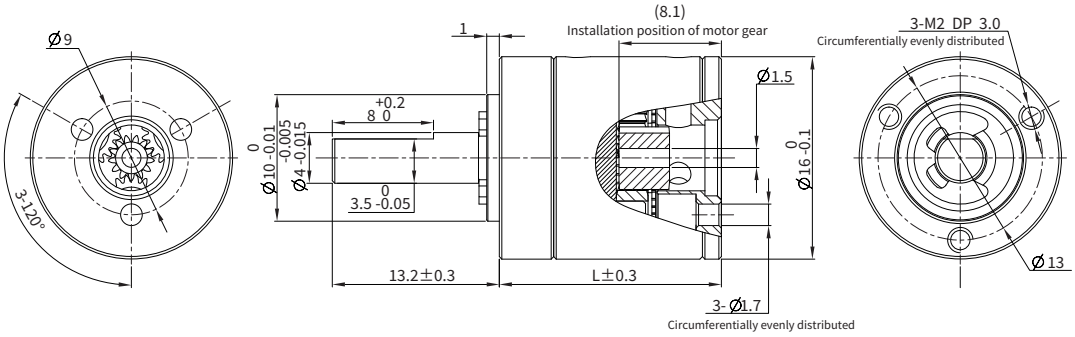

Stage	-	Stage 1	Stage 2	Stage 3	Stage 4
Gear ratio	X : 1	3.9, 5.3	16, 21, 28	62, 83, 111, 150	243, 326, 439, 590, 794
Max. backlash	°	1.0	1.2	1.3	1.4
Max. continuous output power	W	6.5	3.2	1.6	0.6
Max. peak output power	W	8.0	4.0	2.0	0.75
Max. continuous input speed	rpm	12000	14000	14000	14000
Max. peak input speed	rpm	15000	18000	18000	18000
Max. continuous torque	N·m	0.2	0.25	0.35	0.45
Max. peak torque	N·m	0.25	0.35	0.45	0.55
Max. efficiency	%	90	80	75	65
Weight	g	25	31	37	42
Gearbox length L	mm	18.7	25.5	30.2	35

Accessories and Options

22PGX

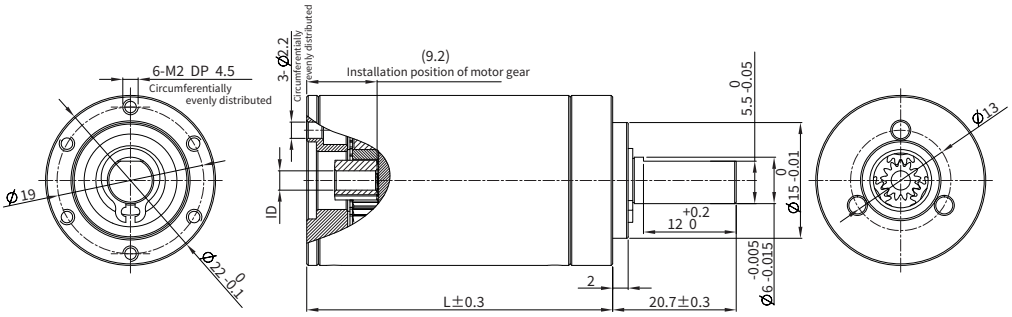

Stage	-	Stage 1	Stage 2	Stage 3	Stage 4
Gear ratio	X : 1	3.9, 5.3	16, 21, 28	62, 83, 111, 150	243, 326, 439, 590, 794
Max. backlash	°	0.85	1.05	1.2	1.35
Max. continuous output power	W	24	12	6.0	1.6
Max. peak output power	W	30	15	7.5	2.0
Max. continuous input speed	rpm	8000	10000	10000	10000
Max. peak input speed	rpm	10000	12500	12500	12500
Max. continuous torque	N·m	0.5	0.7	1.2	1.5
Max. peak torque	N·m	0.6	0.9	1.5	1.9
Max. efficiency	%	90	81	74	66
Weight	g	59	83	97	112
Gearbox length L	mm	22.3	33	39.6	46.3

28PGX

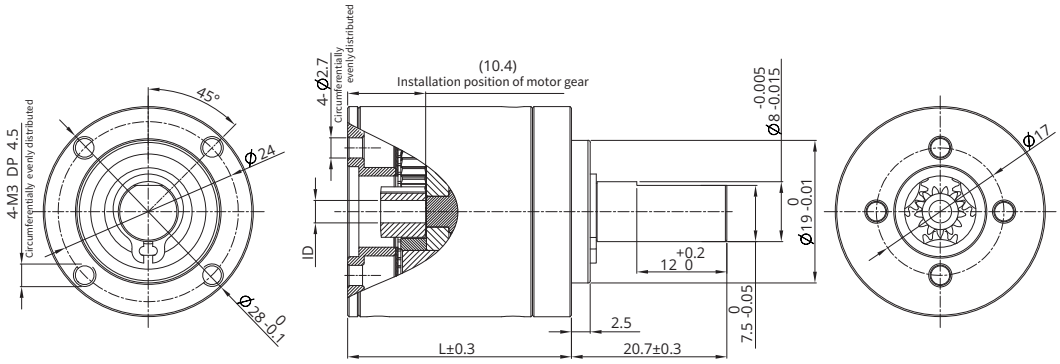

Stage	-	Stage 1	Stage 2	Stage 3	Stage 4
Gear ratio	X : 1	3.9, 5.3	16, 21, 28	62, 83, 111, 150	243, 326, 439, 590, 794
Max. backlash	°	0.5	0.6	0.7	0.75
Max. continuous output power	W	100	50	25	8.0
Max. peak output power	W	125	62	31	10
Max. continuous input speed	rpm	6000	7000	7000	7000
Max. peak input speed	rpm	7500	8750	8750	8750
Max. continuous torque	N·m	1.25	2.9	5.0	5.0
Max. peak torque	N·m	1.6	3.6	6.3	6.3
Max. efficiency	%	90	81	72	65
Weight	g	103	150	174	198
Gearbox length L	mm	24.2	36.9	43.5	50.2

Accessories and Options

36PGX

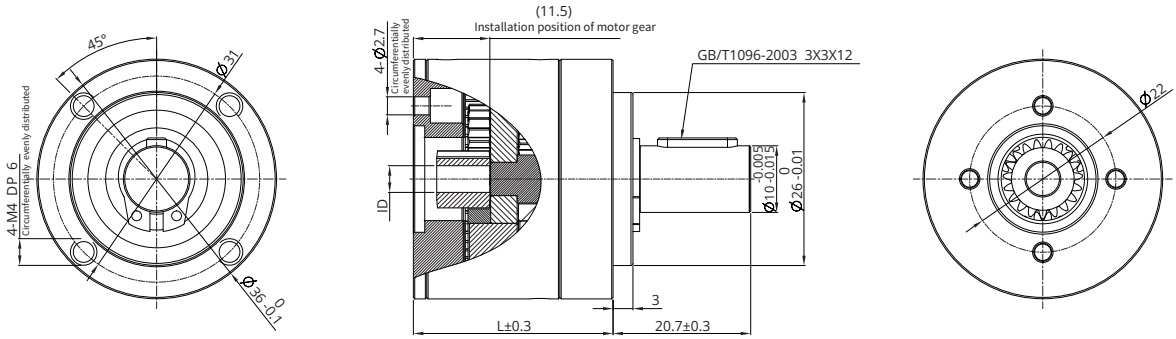

Stage	-	Stage 1	Stage 2	Stage 3	Stage 4
Gear ratio	X : 1	3.9, 5.3	16, 21, 28	62, 83, 111, 150	243, 326, 439, 590, 794
Max. backlash	°	0.5	0.6	0.7	0.8
Max. continuous output power	W	185	90	45	15
Max. peak output power	W	230	115	60	19
Max. continuous input speed	rpm	6000	6000	6000	6000
Max. peak input speed	rpm	7500	7500	7500	7500
Max. continuous torque	N·m	2.3	5.4	9.3	9.3
Max. peak torque	N·m	2.9	6.8	11.6	11.6
Max. efficiency	%	90	80	72	65
Weight	g	156	238	277	315
Gearbox length L	mm	30	44.7	51.3	58

42PGX

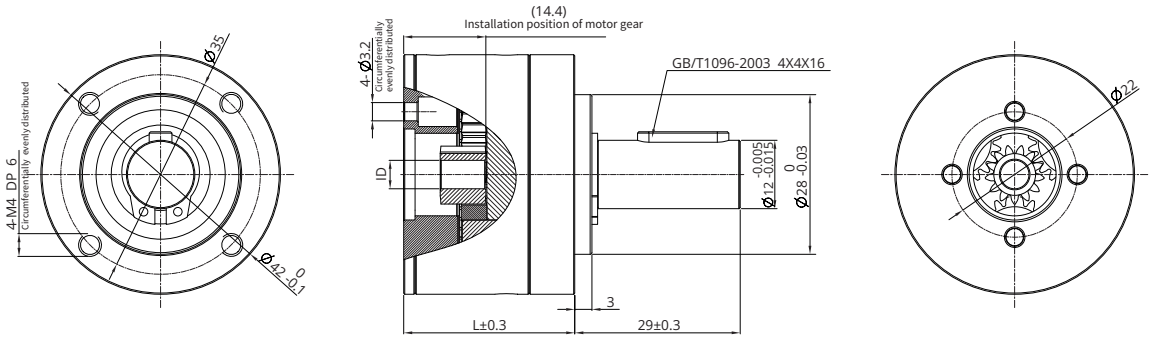

Stage	-	Stage 1	Stage 2	Stage 3	Stage 4
Gear ratio	X : 1	3.9, 5.3	16, 21, 28	62, 83, 111, 150	243, 326, 439, 590, 794
Max. backlash	°	0.3	0.4	0.5	0.6
Max. continuous output power	W	480	200	85	20
Max. peak output power	W	600	250	106	25
Max. continuous input speed	rpm	6000	6000	6000	6000
Max. peak input speed	rpm	7500	7500	7500	7500
Max. continuous torque	N·m	3.0	7.5	15	15
Max. peak torque	N·m	4.5	11.3	22.5	22.5
Max. efficiency	%	90	81	72	64
Weight	g	252	405	476	544
Gearbox length L	mm	36.1	54.9	63.6	72.4

E Brushed Coreless DC Motor

DINGS' offers a lineup of Brushed Coreless DC motors in five frame sizes: 8 mm, 10 mm, 16 mm, 25 mm, and 40 mm.

Featuring a coreless rotor design, these motors deliver compact and lightweight construction, fast response, and high efficiency.

The optimized moment-of-inertia design significantly enhances dynamic performance, making them suitable for precision-control applications such as medical devices, robotics, and advanced measurement equipment.

With stable operation, low noise, strong starting torque, and agile control response, they are an ideal choice for high-performance miniature drive systems.

Part Number Construction	E-2
8 mm	E-3
10mm	E-5
16 mm	E-7
25 mm	E-9
40 mm	E-11

Part Number Construction

00	ZYC	C	00	T	C	B	E	A	-	51	S	N	S	-	1
①	②	③	④	⑤	⑥	⑦	⑧	⑨		⑩	⑪	⑫	⑬		⑭

① Frame Size

Motor Size(mm)	8	10	16	25	40

② Product Name

ZYC = Brushed Coreless DC Motor

③ Motor Shape

C = Circular Type

S = Square Type

④ Motor Length

Unit : mm

When the length involves decimal points, use "_" instead

⑤ Motor Casing

L = Aluminum

T = Stainless steel / Iron

X = No housing

⑥ Brush Type

C = Graphite Brush

P = Metal-Graphite Brush

⑦ Option

EKX = Encoder (X = Encoder Resolution)

B= Brake

GX= Gearbox (X = Gear Ratio)

Note: When selecting multiple options, please arrange them in alphabetical order (e.g., "BEG").

⑧ Structure

E = External type

N = Non-Captive type

C = Electric Cylinder (Captive) type

K = Kaptive type

⑨ Lead Screw Code

Please refer to the lead screw code selection table

⑩ Screw Length / Stroke

Kaptive = stroke distance

Non-captive = total length of screw

External = screw extension length from the mounting flange

⑪ Screw Surface Treatment

T= Teflon coating

S = Standard (No teflon coating)

⑫ End Machining

M = Metric

U = UNC

S = Smooth

C = Customization

N = None

⑬ Nut Style

S = Standard flange nut

A = Anti-backlash nut

C = Customized nut

⑭ Customer Sequence Number

Example

Part Number	16ZYCC40-1
Description	16mm size Brushed Coreless DC Motor Circular type Body length 40mm Customization 001

8mm Series

Motor Characteristics

Motor part number		8ZYCC24P-1	8ZYCC24P-G16-E256-1
Gear ratio		-	16
Encoder type		-	Magnetic encoder
Pulses per revolution		-	256
Phase		-	3
Rated voltage	V	12	12
No-load speed	RPM	12800	780
No-load current	mA	6	30
Max. continuous torque	mN·m	0.6	6.7
Max. continuous speed	RPM	6300	430
Max. continuous current	mA	80	80
Motor efficiency	%	72	-
Peak torque	mN·m	1.17	-
Peak current	A	0.13	-
Terminal resistance	Ω	78.4	-
Terminal inductance	mH	0.28	-
Torque constant	mN·m/A	8.83	-
Back-EMF constant	rpm/V	1120	-
Speed constant	rpm/mN·m	11400	-
Rotor inertia	$g·cm^2$	0.043	-
Mechanical time constant	ms	4.32	
Insulation class	-	F/155	-
Case thermal resistance (no load)	K/W	115	-
Ambient temperature	°C	-20 ~ +65	-
Max winding temperature (no load)	°C	155	-
Brush type	-	Precious-metal brushes	-
Number of commutator segments	-	5	-
Motor weight	g	5.2	8

Dimensional Drawings

- 8ZYCC24P-E256-1

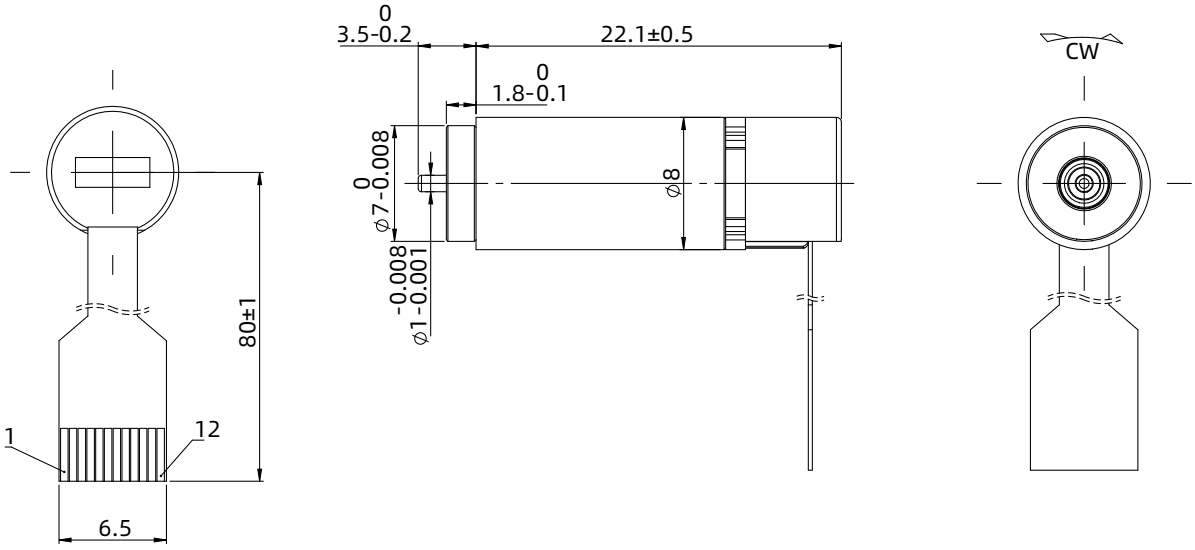

- 8ZYCC24P-G16-E256-1

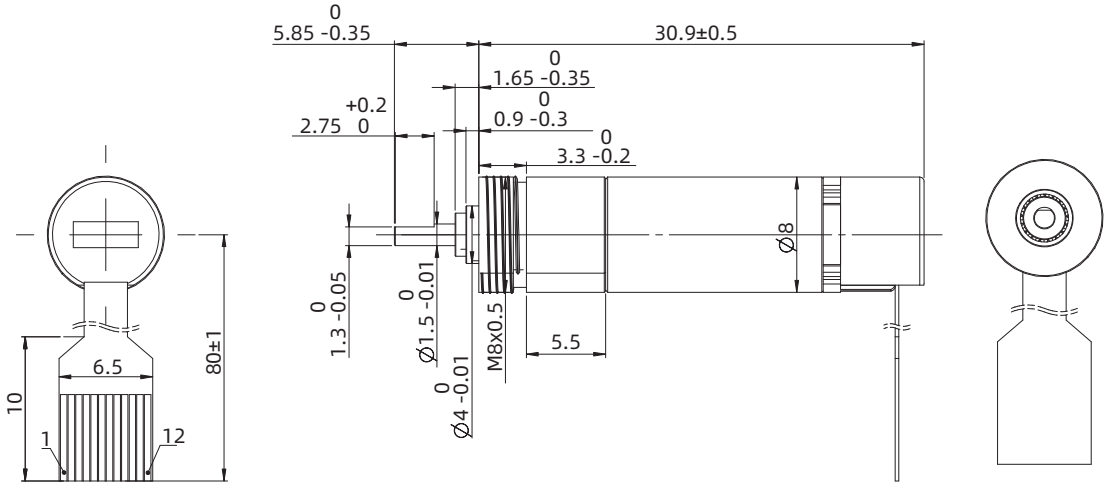

Torque Performance Curves

- 8ZYCC24P-1

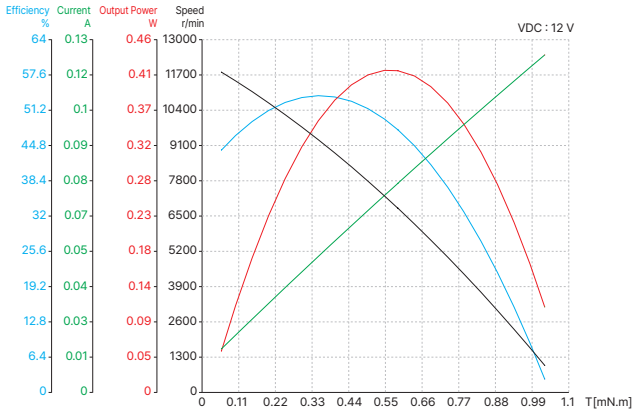

- 8ZYCC24P-G16-E256-1

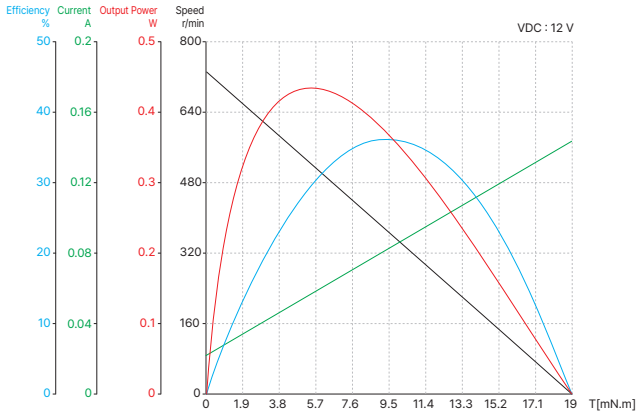

10mm Series

Motor Characteristics

Motor part number		10ZYCC25P-EK256-1	10ZYCC25P-G18-EK256-1
Gear ratio		-	18
Encoder type		-	Magnetic encoder
Pulses per revolution		-	256
Phase		-	3
Rated voltage	V	12	12
No-load speed	RPM	11300	620
No-load current	mA	12	30
Max. continuous torque	mN·m	1.6	23
Max. continuous speed	RPM	6500	360
Max. continuous current	mA	200	250
Motor efficiency	%	75	-
Peak torque	mN·m	3.2	-
Peak current	A	0.39	-
Terminal resistance	Ω	30.2	-
Terminal inductance	mH	0.56	-
Torque constant	mN·m/A	9.67	-
Back-EMF constant	rpm/V	984	-
Speed constant	rpm/mN·m	3079	-
Rotor inertia	g·cm²	0.18	-
Mechanical time constant	ms	5.81	-
Insulation class	-	F/155	-
Case thermal resistance (no load)	K/W	40	-
Ambient temperature	°C	-20 ~ +65	-
Max winding temperature (no load)	°C	100	-
Brush type	-	Precious-metal brushes	-
Number of commutator segments	-	7	-
Motor weight	g	15	21.2

For customized options, please contact DINGS' or your local distributor

Dimensional Drawings

- **10ZYCC25P-EK256-1**

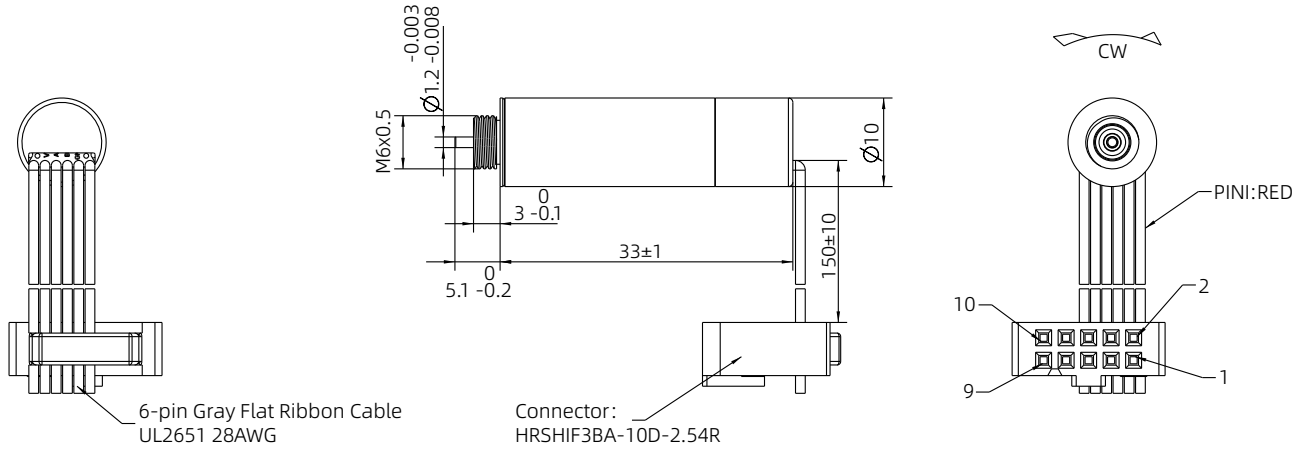

- **10ZYCC25P-G18-EK256-1**

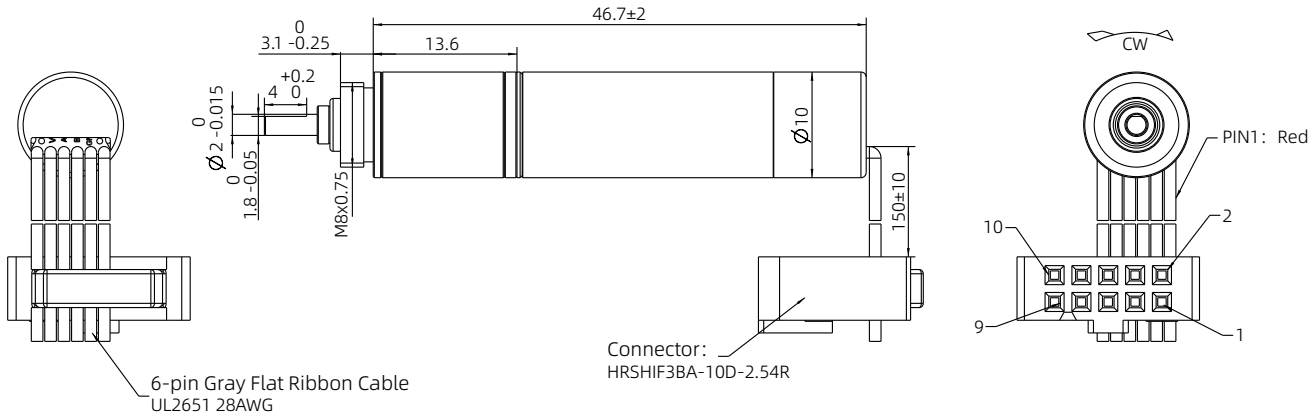

Torque Performance Curves

- **10ZYCC25P-EK256-1**

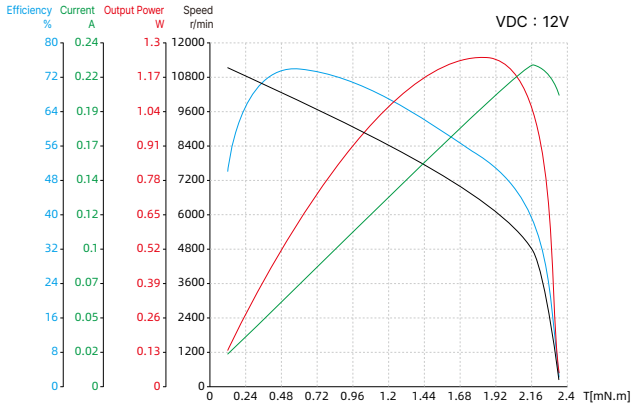

- **10ZYCC25P-G18-EK256-1**

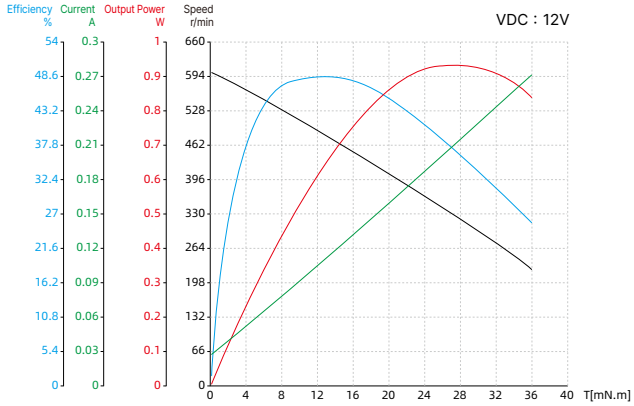

16mm Series

Motor Characteristics

Motor part number		16ZYCC40-1
Rated voltage	V	24
No-load speed	RPM	6600
No-load current	mA	12
Max. continuous torque	mN·m	10.7
Max. continuous speed	RPM	4600
Max. continuous current	A	0.37
Max. efficiency	%	78
Peak torque	mN·m	40
Peak current	A	1.1
Terminal resistance	Ω	22.6
Terminal inductance	mH	1.46
Torque constant	mN·m/A	35.5
Back-EMF constant	rpm/V	274
Speed constant	rpm/mN·m	163
Rotor inertia	$g·cm^2$	2.8
Mechanical time constant	ms	5.02
Insulation class	-	F/155
Case thermal resistance (no load)	K/W	21
Ambient temperature	°C	-20 ~ 65
Max. winding temperature (no load)	°C	155
Brush type	-	Graphite brushes
Number of commutator segments	-	7
Motor weight	g	45

16mm Series

Dimensional Drawings

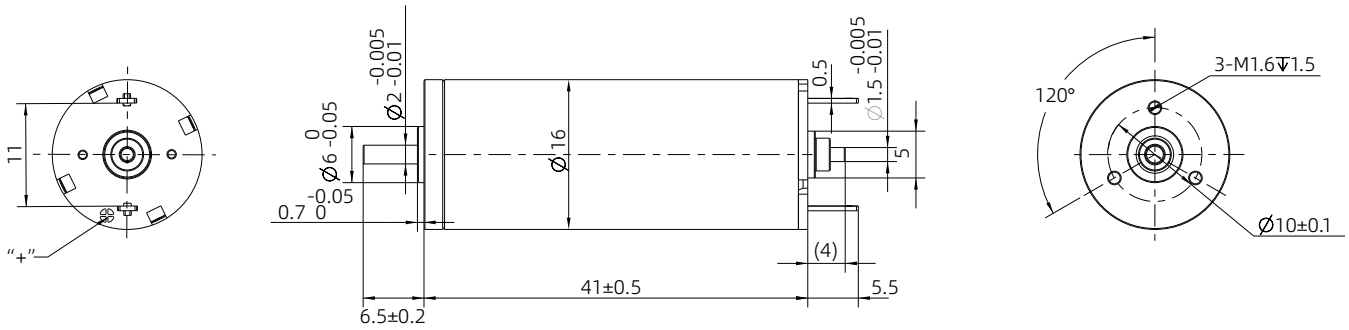

Torque Performance Curves

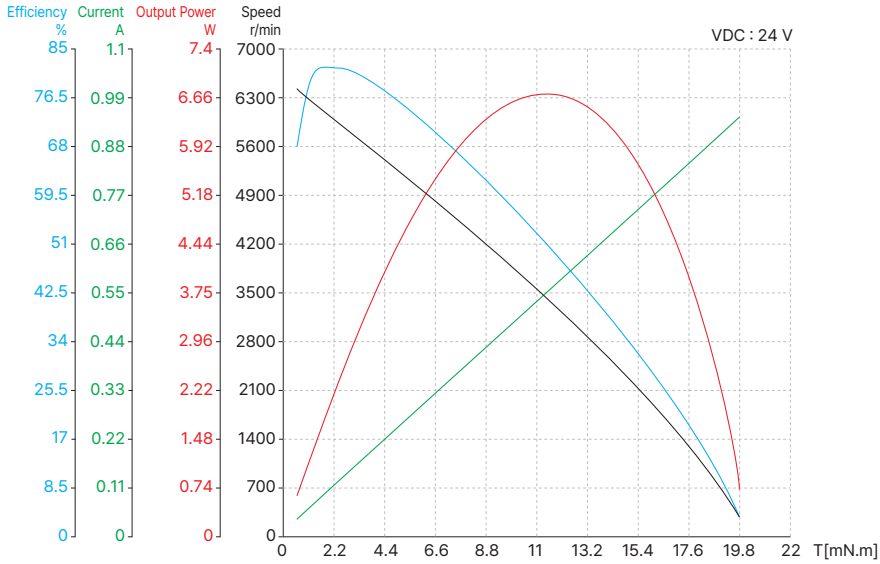

25mm Series

Motor Characteristics

Motor part number		25ZYCC43-2
Rated voltage	V	24
No-load speed	RPM	11000
No-load current	A	0.18
Max. continuous torque	mN·m	30
Max. continuous speed	RPM	10000
Max. continuous current	A	1.8
Max. efficiency	%	88
Peak torque	mN·m	270
Peak current	A	13
Terminal resistance	Ω	1.8
Terminal inductance	mH	0.22
Torque constant	mN·m/A	20.3
Back-EMF constant	rpm/V	473
Speed constant	rpm/mN·m	41.75
Rotor inertia	g·cm²	14.9
Mechanical time constant	ms	6.5
Insulation class	-	F/155
Case thermal resistance (no load)	K/W	15
Ambient temperature	°C	-20 ~ 65
Max. winding temperature (no load)	°C	155
Brush type	-	Graphite brushes
Number of commutator segments	-	11
Motor weight	g	105

For customized options, please contact DINGS' or your local distributor

25mm Series

Dimensional Drawings

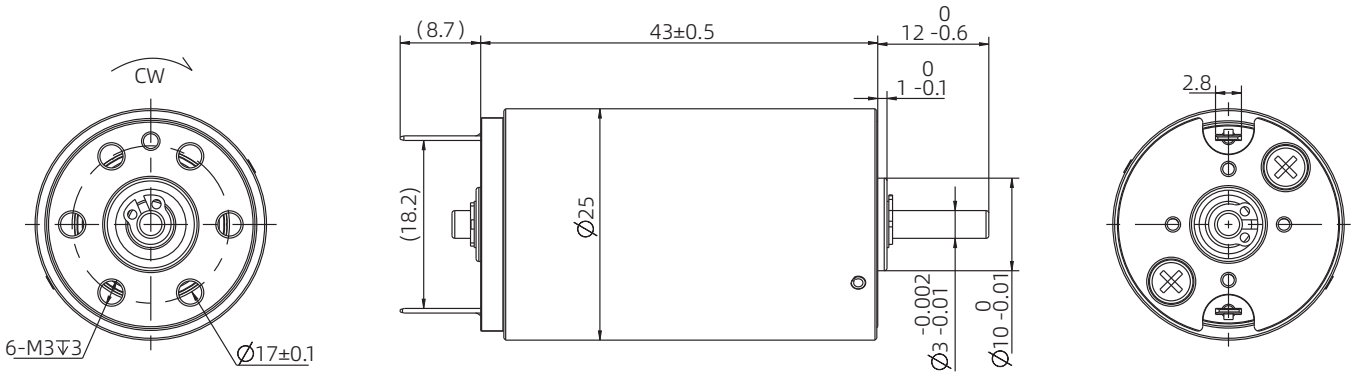

Torque Performance Curves

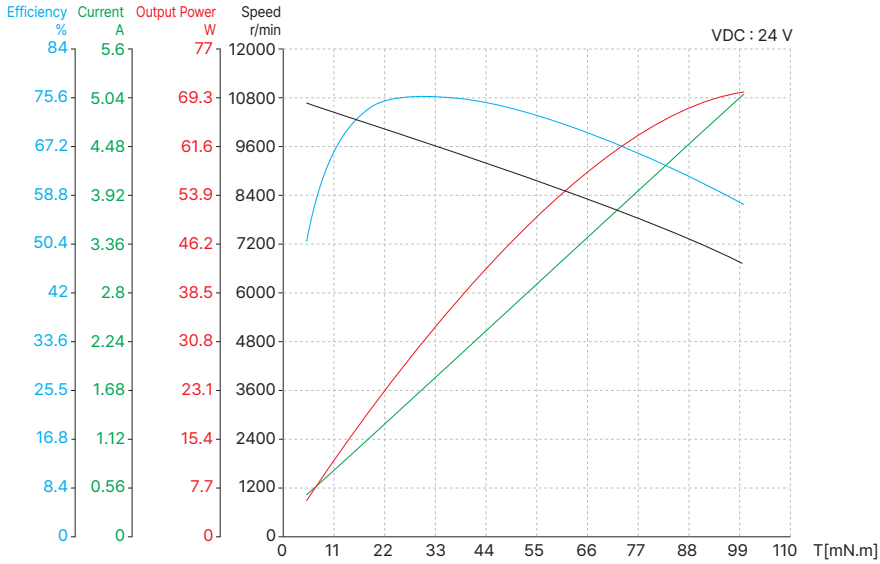

40mm Series

Motor Characteristics

Motor part number		40ZYCC72-2
Rated voltage	V	48
No-load speed	RPM	6600
No-load current	A	0.15
Max. continuous torque	mN·m	200
Max. continuous speed	RPM	5500
Max. continuous current	A	3.8
Max. efficiency	%	85
Peak torque	mN·m	1080
Peak current	A	16
Terminal resistance	Ω	2.94
Terminal inductance	mH	0.98
Torque constant	mN·m/A	65.9
Back-EMF constant	rpm/V	143
Speed constant	rpm/mN·m	6.36
Rotor inertia	$g·cm^2$	142
Mechanical time constant	ms	9.6
Insulation class	-	F/155
Case thermal resistance (no load)	K/W	15
Ambient temperature	°C	-20 ~ 65
Max. winding temperature (no load)	°C	155
Brush type	-	Graphite brushes
Number of commutator segments	-	13
Motor weight	g	460

40mm Series

Dimensional Drawings

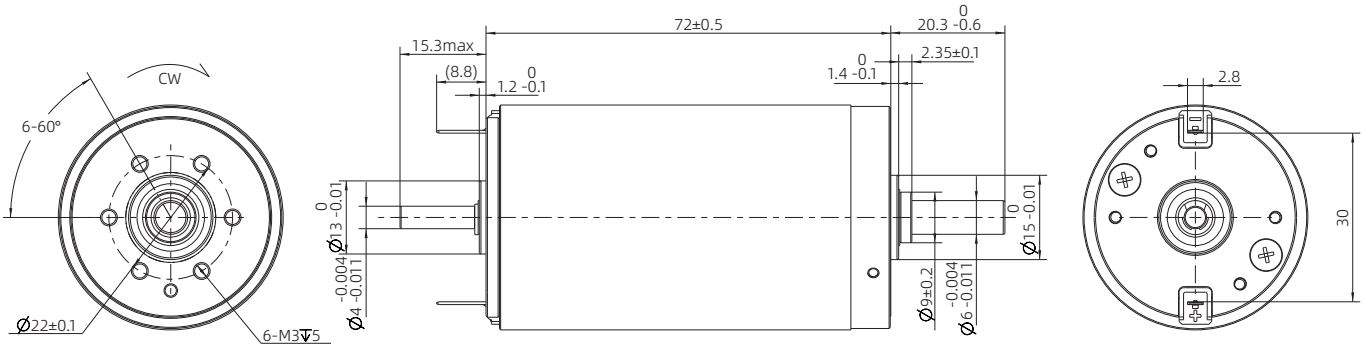

Torque Performance Curves

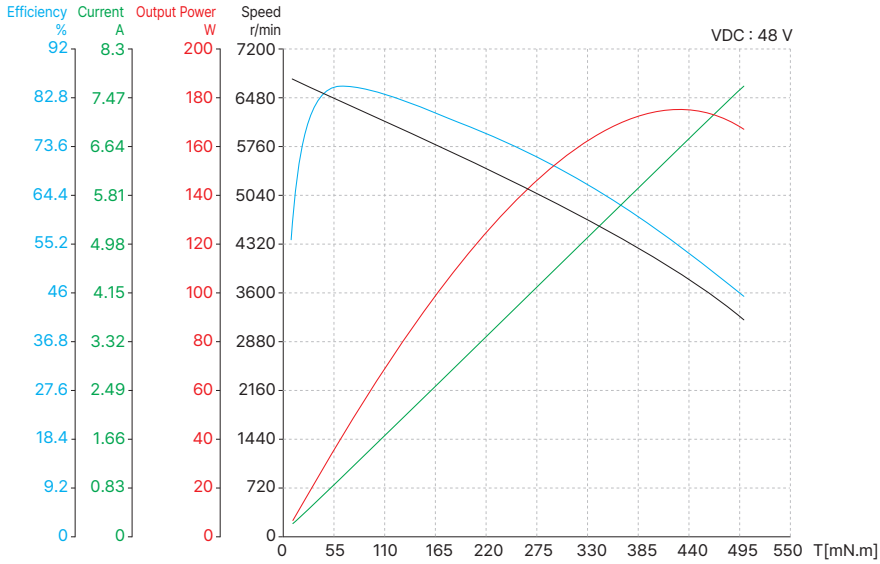

F Brushless DC Motor

DINGS' provides 9 different sizes of Brushless DC motors have several advantages, including start and speed regulation, higher power density and over load capacity.

From 16mm to 110mm with power output ranging from 9.2W to 710W, DINGS' provides 9 frame sizes and according customer's requirements, higher capacity of Brushless DC Motors can be customized.

Part number construction	F-2
16 mm	F-3
22 mm	F-5
28 mm	F-7
36 mm	F-9
42 mm	F-11
57 mm	F-15
60 mm	F-18
86 mm	F-21
110mm	F-24
Accessories and Options	F-26

Part Number Construction

00	ZW	C	00	L	EK	E	X	-51_5	S	M	S	-1
①	②	③	④	⑤	⑥	⑦	⑧	⑨	⑩	⑪	⑫	⑬

① Motor Size

Motor Size(mm)	16	22	28	36	42	57	60	86	110

② Product Name

ZW = Slotted Brushless DC Motor

③ Motor Shape

C = Circular Type

S = Square Type

④ Motor Length

Unit : mm

When the length involves decimal points, use "_" instead

⑤ Motor Casing

L = Aluminum

T = Stainless steel / Iron

X = No housing

⑥ Option

EKX = Encoder (X = Encoder Resolution)

B = Brake

GX= Gearbox (X = Gear Ratio)

Note: When selecting multiple options, please arrange them in alphabetical order (e.g., "BEG").

⑦ Structure

E = External type

N = Non-Captive type

C = Electric Cylinder (Captive) type

K = Kaptive type

⑧ Lead Screw Code

Please refer to the lead screw code selection table

⑨ Screw Length / Stroke

Kaptive = stroke distance

Non-captive = total length of screw

External = screw extension length from the mounting flange

⑩ Screw Surface Treatment

T = Teflon coating

S = Standard (No teflon coating)

⑪ End Machining

M = Metric

U = UNC

S = Smooth

C = Customization

N = None

⑫ Nut Style

S = Standard flange nut

A = Anti-backlash nut

C = Customized nut

⑬ Customer Sequence Number

Example

Part Number	57ZWS40L-001
Description	General NEMA 23 size (57mm) Square type Brushless DC motor 40mm motor length With case Customization No. 001

For customized options, please contact DINGS' or your local distributor

16mm Series

16ZWC32L-1 has a very compact size but it has optimized magnetic circuit.

Brushless DC Motor with core winding has high torque density and multi-pole rotor can provide very strong and dynamic performance.

16ZWC32L-1 can reach Max. 16,300RPM.

Motor Characteristics

Motor part number		16ZWC32L-1
Body length (LT)	mm	32±1
Pole pairs	-	2
Terminal resistance, Phase-Phase	Ω	6.5
Terminal inductance, Phase-Phase	mH	0.78
Winding connection method	-	Star connection
Insulation class	-	B
Duty type	-	S2
Feedback method	-	Hall sensors
Commutation angle	-	120°
Insulation strength (Withstand voltage)	-	500VAC/1KHz/1mA/1s
Insulation resistance	-	100MOhm 20C
Weight	g	25.5
Rated voltage	V	24
Rated power	W	9.2
Rated torque	N·m	0.007
Rated speed	RPM	12600
Rated current	A	0.65
No load speed	RPM	16300
No load current	A	0.22
Motor efficiency	%	71.6
Cogging torque	mN·m	4.5
Noise (Ambient noise 20dB, test distance 1m)	dB	< 50
Enclosure - Ambient thermal resistance	K/W	0.9
Ambient temperature	°C	25
Maximum winding temperature	°C	68.5
Torque constant	N·m/A	0.011
Back-EMF constant / Effective value	V/Krpm	1.25
Peak torque	N·m	0.021
Peak current	A	1.95
Rotor inertia	$g·cm^2$	0.45

For customized options, please contact DINGS' or your local distributor

16mm Series

Dimensional Drawings

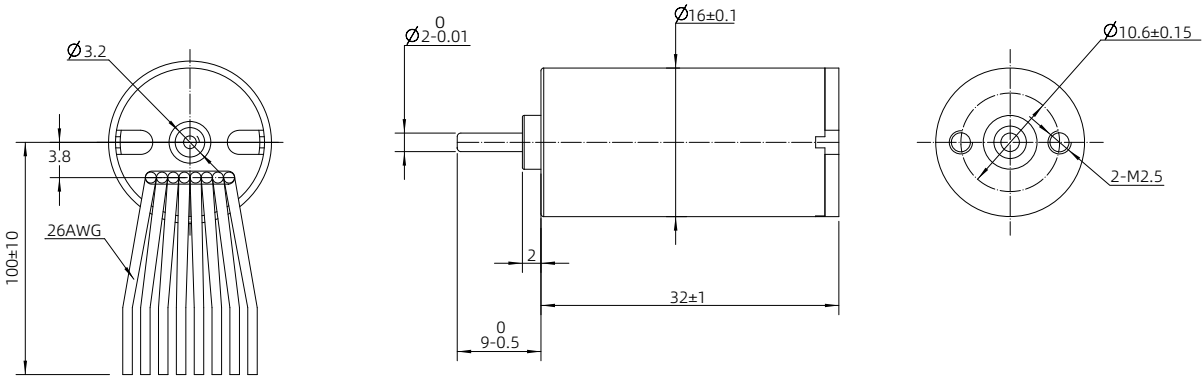

Lead-out type	Lead-out color	Function
UL3265 AWG26	Yellow	Hall U (Hu)
	Green	Hall V (Hv)
	Blue	Hall W (Hw)
	Red	Hall power supply positive (Vcc)
	Black	Hall power supply negative (GND)
UL3265 AWG26	Gray	U phase
	White	V phase
	Brown	W phase

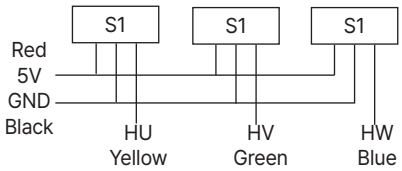

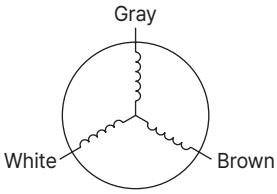

Torque Performance Curves

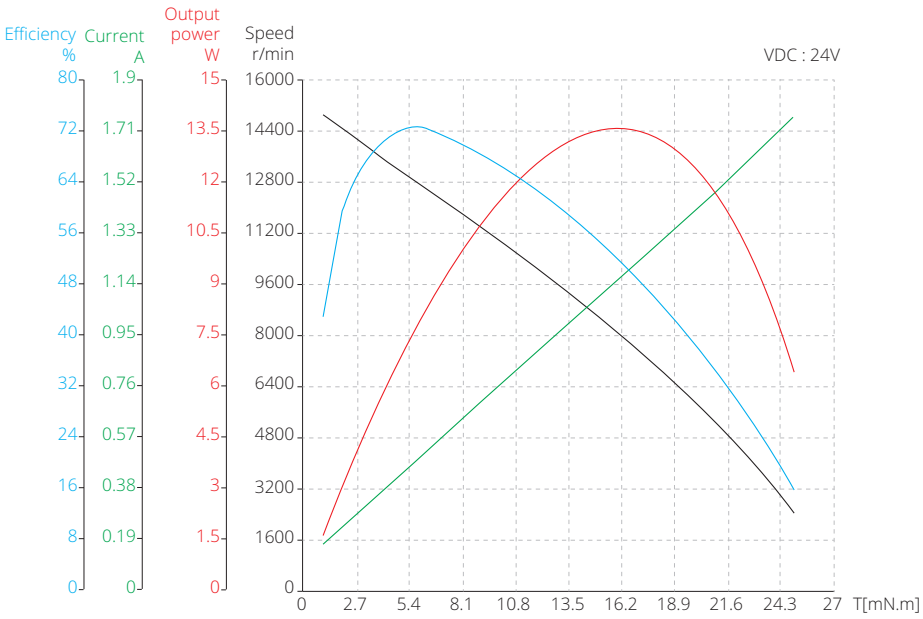

Note : All drawings are 1st-angle projection - ISO Compliant (3D models available)

22mm Series

22mm Brushless DC Motor delivers up to 0.019 N·m rated torque and 19.9 W rated output power.

22mm motor has Star winding connection and 2 pole pairs motor with Hall sensors feedback method as standard.

In addition, gearbox and incremental encoder are available.

Motor Characteristics

Motor part number		22ZWC48L-1
Body length (LT)	mm	47.5±1
Pole pairs	-	2
Terminal resistance, Phase-Phase	Ω	3.053
Terminal inductance, Phase-Phase	mH	0.54
Winding connection method	-	Star connection
Insulation class	-	B
Duty type	-	S2
Feedback method	-	Hall sensors
Commutation angle	-	120°
Insulation strength (Withstand voltage)	-	500VAC/1KHz/1mA/1s
Insulation resistance	-	100MOhm 20C
Weight	g	67.7
Rated voltage	V	24
Rated power	W	19.9
Rated torque	N·m	0.019
Rated speed	RPM	10000
Rated current	A	1.2
No load speed	RPM	12000
No load current	A	0.24
Motor efficiency	%	70
Cogging torque	mN·m	3.42
Noise (Ambient noise 20dB, test distance 1m)	dB	< 50
Enclosure - Ambient thermal resistance	K/W	0.85
Ambient temperature	°C	25
Maximum winding temperature	°C	75
Torque constant	N·m/A	0.016
Back-EMF constant / Effective value	V/Krpm	1.67
Peak torque	N·m	0.057
Peak current	A	3.6
Rotor inertia	g·cm²	1.1

For customized options, please contact DINGS' or your local distributor

Dimensional Drawings

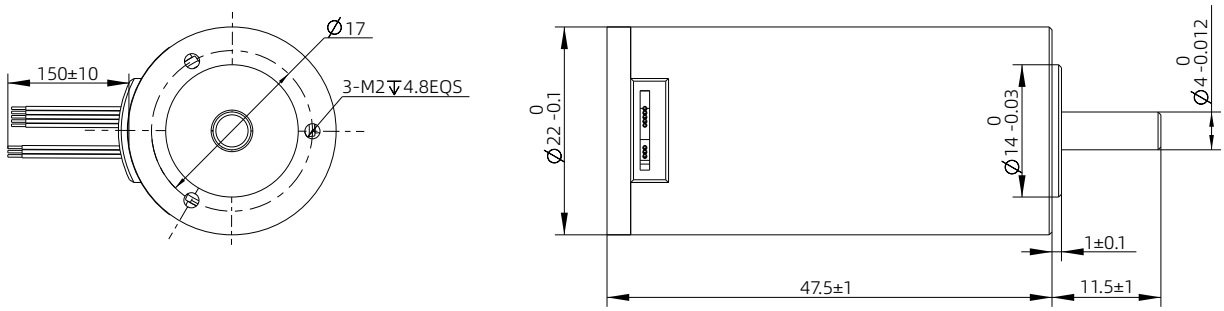

Lead-out type	Lead-out color	Function
UL3265 AWG26	Gray	Hall U (Hu)
	White	Hall V (Hv)
	Brown	Hall W (Hw)
	Red	Hall power supply positive (Vcc)
	Black	Hall power supply negative (GND)
UL3265 AWG26	Yellow	U phase
	Green	V phase
	Blue	W phase

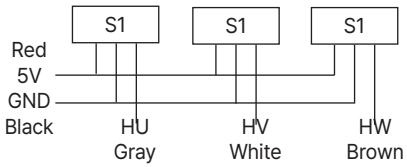

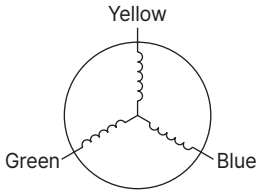

Torque Performance Curves

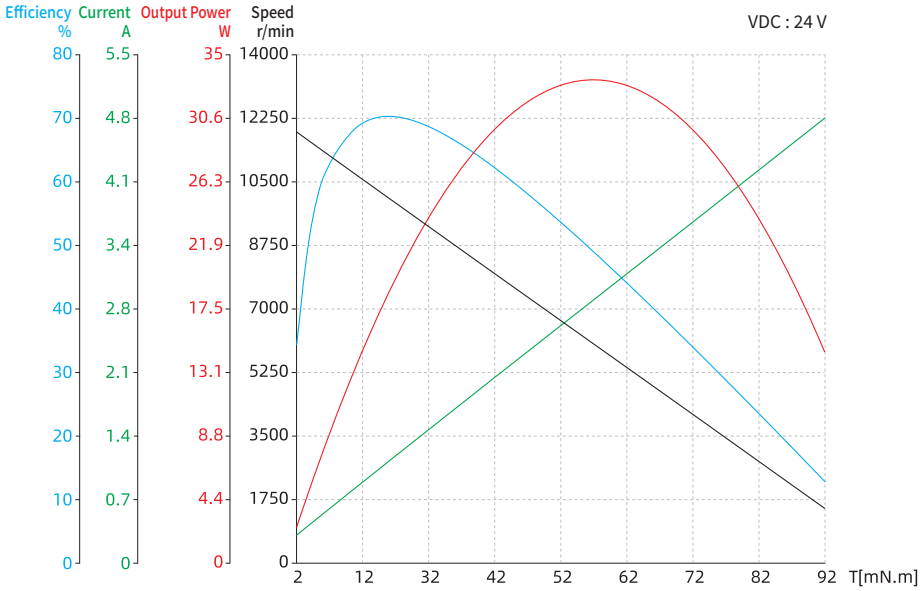

Note : All drawings are 1st-angle projection - ISO Compliant (3D models available)

28mm Series

28mm Brushless DC Motor delivers up to 0.05 N·m rated torque and 52.4 W rated output power.

28mm motor has Star winding connection and 2 pole pairs motor with Hall sensors feedback method as standard.

In addition, gearbox and incremental encoder are available.

Motor Characteristics

Motor part number		28ZWC58L-1
Body length (LT)	mm	57.5±1
Pole pairs	-	2
Terminal resistance, Phase-Phase	Ω	0.676
Terminal inductance, Phase-Phase	mH	0.2
Winding connection method	-	Star connection
Insulation class	-	B
Duty type	-	S2
Feedback method	-	Hall sensors
Commutation angle	-	120°
Insulation strength (Withstand voltage)	-	500VAC/1KHz/1mA/1s
Insulation resistance	-	100MOhm 20C
Weight	g	144
Rated voltage	V	24
Rated power	W	52.4
Rated torque	N·m	0.05
Rated speed	RPM	10000
Rated current	A	3
No load speed	RPM	12000
No load current	A	0.5
Motor efficiency	%	77
Cogging torque	mN·m	12.8
Noise (Ambient noise 20dB, test distance 1m)	dB	< 50
Enclosure - Ambient thermal resistance	K/W	0.38
Ambient temperature	°C	25
Maximum winding temperature	°C	75
Torque constant	N·m/A	0.017
Back-EMF constant / Effective value	V/Krpm	1.78
Peak torque	N·m	0.15
Peak current	A	9
Rotor inertia	Kg·cm²	0.011

Dimensional Drawings

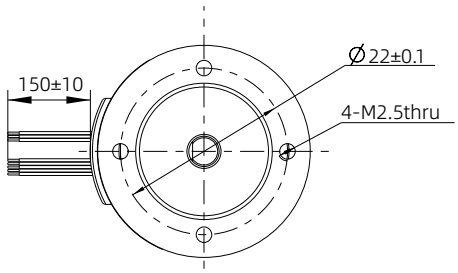

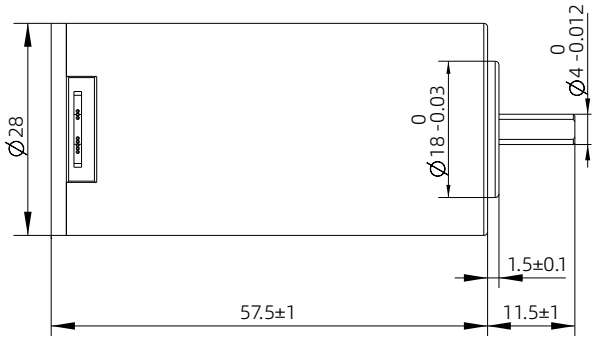

Lead-out type	Lead-out color	Function
UL3265 AWG26	Yellow	Hall U (Hu)
	Green	Hall V (Hv)
	Blue	Hall W (Hw)
	Red	Hall power supply positive (Vcc)
	Black	Hall power supply negative (GND)
UL3265 AWG22	Yellow	U phase
	Green	V phase
	Blue	W phase

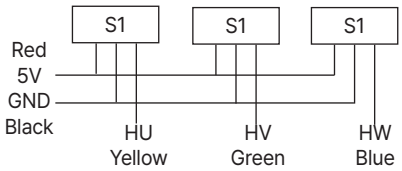

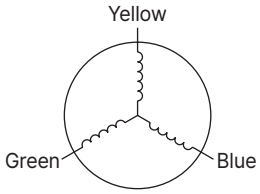

Torque Performance Curves

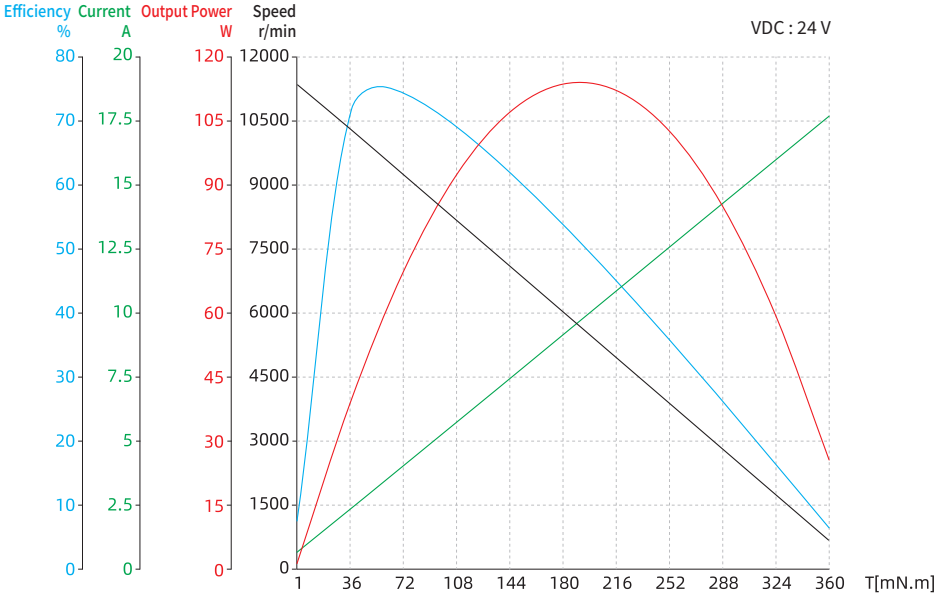

Note : All drawings are 1st-angle projection - ISO Compliant (3D models available)

36mm Series

36mm Brushless DC Motor delivers up to 0.125 N·m rated torque and 130.9 W rated output power.

36mm motor has Star winding connection and 2 pole pairs motor with Hall sensors feedback method as standard.

In addition, gearbox and incremental encoder are available.

Motor Characteristics

Motor part number		36ZWC72L-1
Body length (LT)	mm	71.5±1
Pole pairs	-	2
Terminal resistance, Phase-Phase	Ω	0.67
Terminal inductance, Phase-Phase	mH	0.37
Winding connection method	-	Star connection
Insulation class	-	B
Duty type	-	S2
Feedback method	-	Hall sensors
Commutation angle	-	120°
Insulation strength (Withstand voltage)	-	500VAC/1KHz/1mA/1s
Insulation resistance	-	100MOhm 20C
Weight	g	305.6
Rated voltage	V	48
Rated power	W	130.9
Rated torque	N·m	0.125
Rated speed	RPM	10000
Rated current	A	3.6
No load speed	RPM	12000
No load current	A	0.5
Motor efficiency	%	80
Cogging torque	mN·m	35.5
Noise (Ambient noise 20dB, test distance 1m)	dB	< 50
Enclosure - Ambient thermal resistance	K/W	0.24
Ambient temperature	°C	25
Maximum winding temperature	°C	75
Torque constant	N·m/A	0.035
Back-EMF constant / Effective value	V/Krpm	3.67
Peak torque	N·m	0.375
Peak current	A	10.8
Rotor inertia	Kg·cm²	0.037

For customized options, please contact DINGS' or your local distributor

Dimensional Drawings

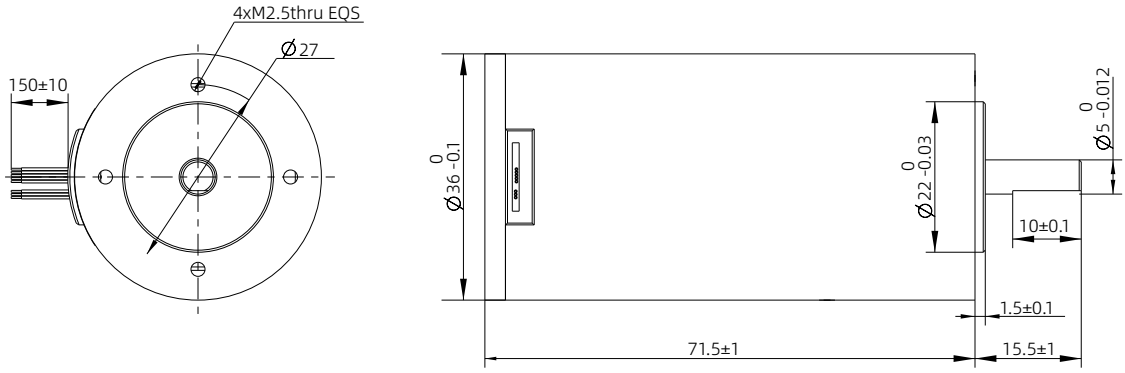

Lead-out type	Lead-out color	Function
UL3265 AWG26	Yellow	Hall U (Hu)
	Green	Hall V (Hv)
	Blue	Hall W (Hw)
	Red	Hall power supply positive (Vcc)
	Black	Hall power supply negative (GND)
UL3265 AWG22	Yellow	U phase
	Green	V phase
	Blue	W phase

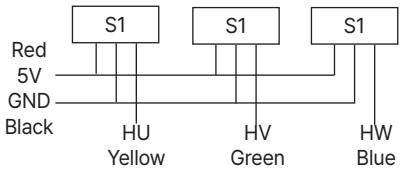

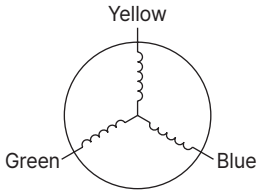

Torque Performance Curves

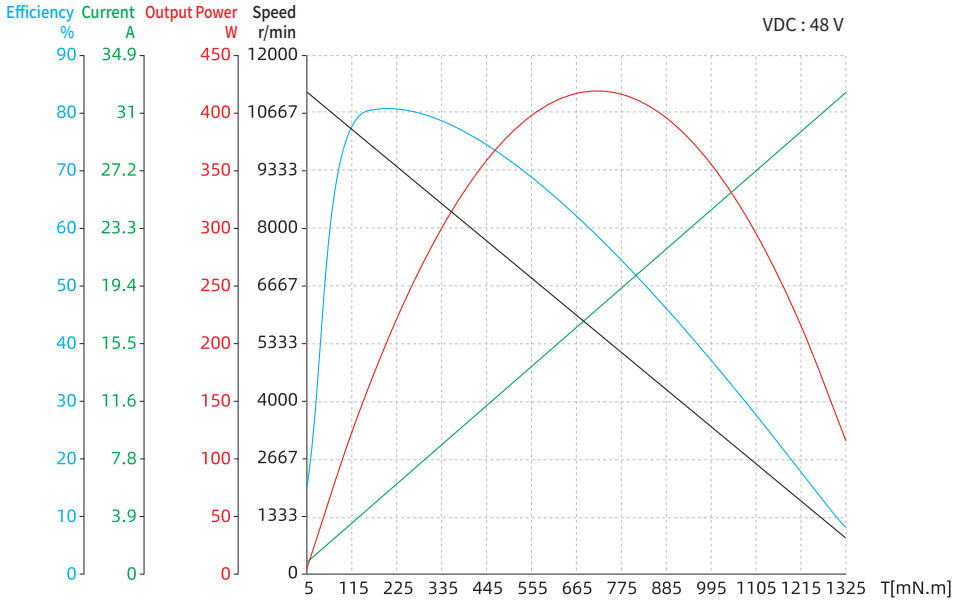

Note : All drawings are 1st-angle projection - ISO Compliant (3D models available)

42mm Series

42mm Brushless DC Motor delivers up to 0.2 N·m rated torque and 209.4 W rated output power.

42mm motors have Star winding connection and 2 or 5 pole pairs motor with Hall sensors feedback method as standard.

In addition, gearbox and incremental encoder are available.

Motor Characteristics

Motor part number		42ZWC75L-1	42ZWC75L-2	42ZWS50X-1	42ZWS63X-1	42ZWS75X-1
Body length (LT)	mm	73±1	73±1	50±1	63±1	75±1
Pole pairs	-	2	2	5	5	5
Terminal resistance, Phase-Phase	Ω	0.24	0.19	2.482	1.261	0.987
Terminal inductance, Phase-Phase	mH	0.15	0.12	1.062	0.586	0.434
Winding connection method	-	Star connection	Star connection	Star connection	Star connection	Star connection
Insulation class	-	B	B	B	B	B
Duty type	-	S2	S2	S2	S2	S2
Feedback method	-	Hall sensors	Hall sensors	Hall sensors	Hall sensors	Hall sensors
Commutation angle	-	120°	120°	120°	120°	120°
Insulation strength (Withstand voltage)	-	500VAC/1KHz/ 1mA/1s	500VAC/1KHz/ 1mA/1s	500VAC/1KHz/ 1mA/1s	500VAC/1KHz/ 1mA/1s	500VAC/1KHz/ 1mA/1s
Insulation resistance	-	100MOhm 20C	100MOhm 20C	100MOhm 20C	100MOhm 20C	100MOhm 20C
Weight	g	425.8	425.8	260	380	500
Rated voltage	V	48	24	24	24	24
Rated power	W	209.4	83	19.6	39.3	58.1
Rated torque	N·m	0.2	0.08	0.0625	0.125	0.185
Rated speed	RPM	10000	10000	3000	3000	3000
Rated current	A	5.5	4.3	1.2	2.4	3.6
No load speed	RPM	12000	12000	4000	4000	4000
No load current	A	0.86	0.7	0.15	0.3	0.45
Motor efficiency	%	80	80	72	77.6	76
Noise (Ambient noise 20dB, test distance 1m)	dB	< 50	< 50	< 50	< 50	< 50
Enclosure - Ambient thermal resistance	K/W	0.085	0.25	0.75	0.38	0.25
Ambient temperature	°C	25	25	31.3	31.3	31.3
Maximum winding temperature	°C	75	75	68.5	68.5	68.5
Torque constant	N·m/A	0.036	0.019	0.052	0.052	0.051
Back-EMF constant / Effective value	V/Krpm	3.77	1.99	5.44	5.44	5.44
Peak torque	N·m	0.6	0.24	0.1875	0.375	0.555
Peak current	A	16.5	12.9	3.6	7.2	10.8
Rotor inertia	Kg·cm²	0.084	0.084	0.05	0.1	0.15

For customized options, please contact DINGS' or your local distributor

Dimensional Drawings

- **42ZWC75L**

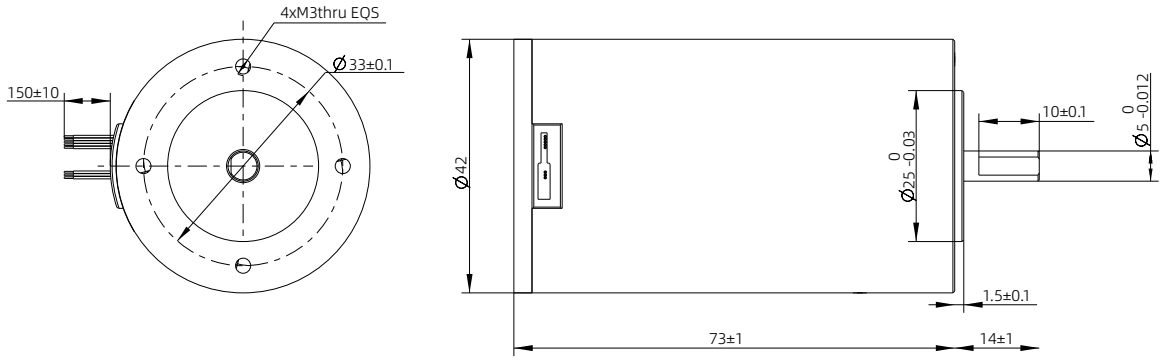

Lead-out type	Lead-out color	Function
UL3265 AWG26	Yellow	Hall U (Hu)
	Green	Hall V (Hv)
	Blue	Hall W (Hw)
	Red	Hall power supply positive (Vcc)
	Black	Hall power supply negative (GND)
UL3265 AWG22	Yellow	U phase
	Green	V phase
	Blue	W phase

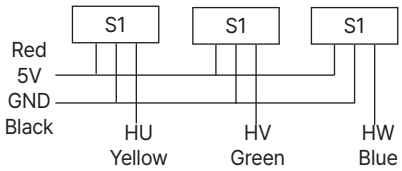

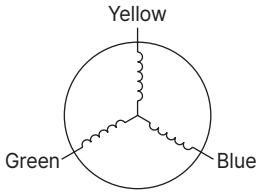

- **42ZWS**X**

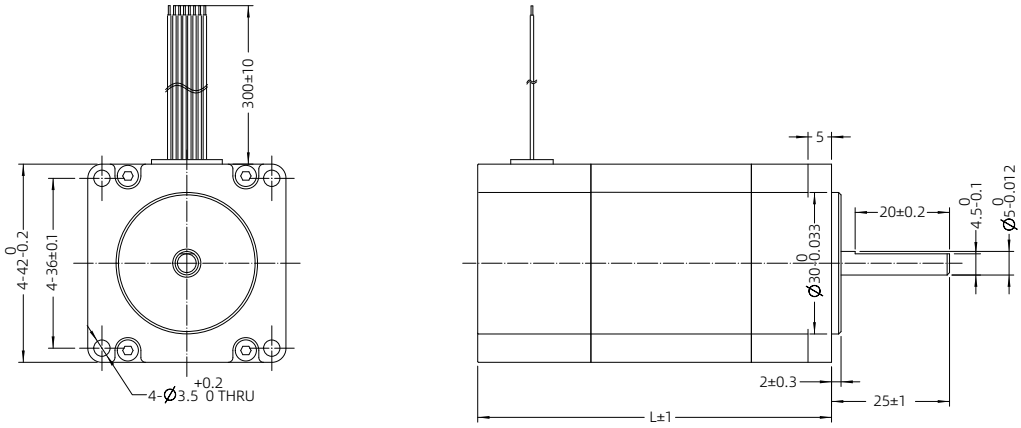

Motor type	L (mm)
42ZWS50X-1	50±1
42ZWS63X-1	63±1
42ZWS75X-1	75±1

Lead-out type	Lead-out color	Function
UL3265 AWG26	Yellow	Hall U (Hu)
	Green	Hall V (Hv)
	Blue	Hall W (Hw)
	Red	Hall power supply positive (Vcc)
	Black	Hall power supply negative (GND)
UL3265 AWG22	Yellow	U phase
	Green	V phase
	Blue	W phase

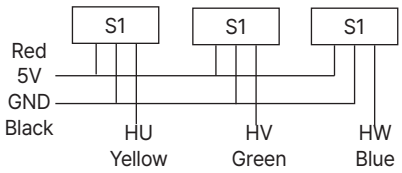

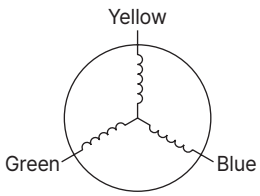

Note : All drawings are 1st-angle projection - ISO Compliant (3D models available)

42mm Series

Torque Performance Curves

- 42ZWC75L-1

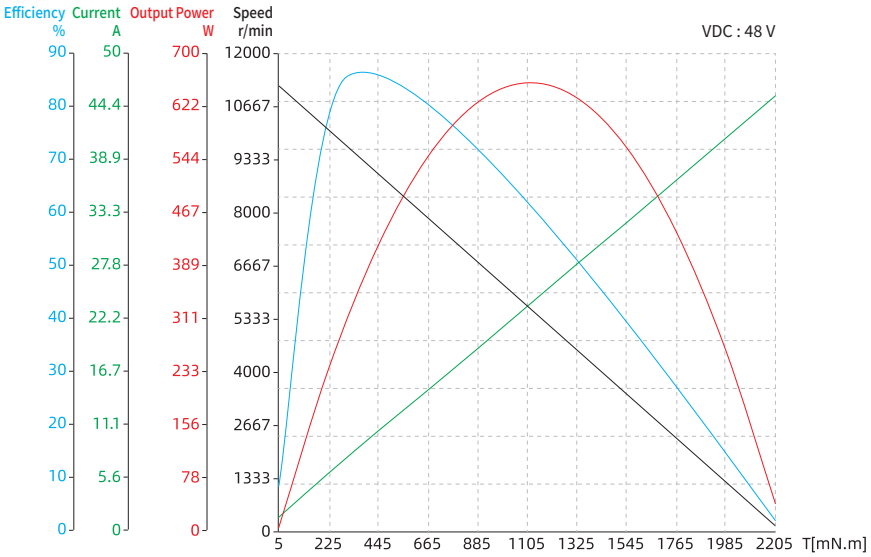

- 42ZWC75L-2

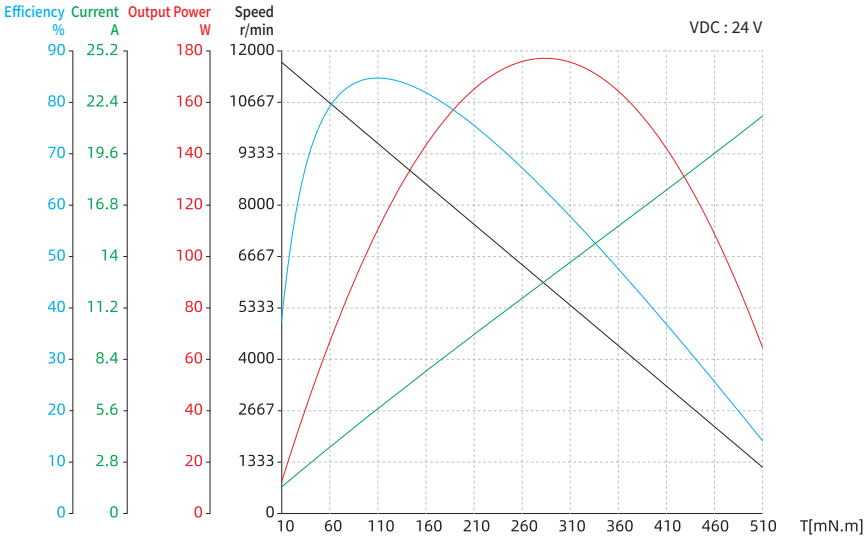

- 42ZWS50X-1

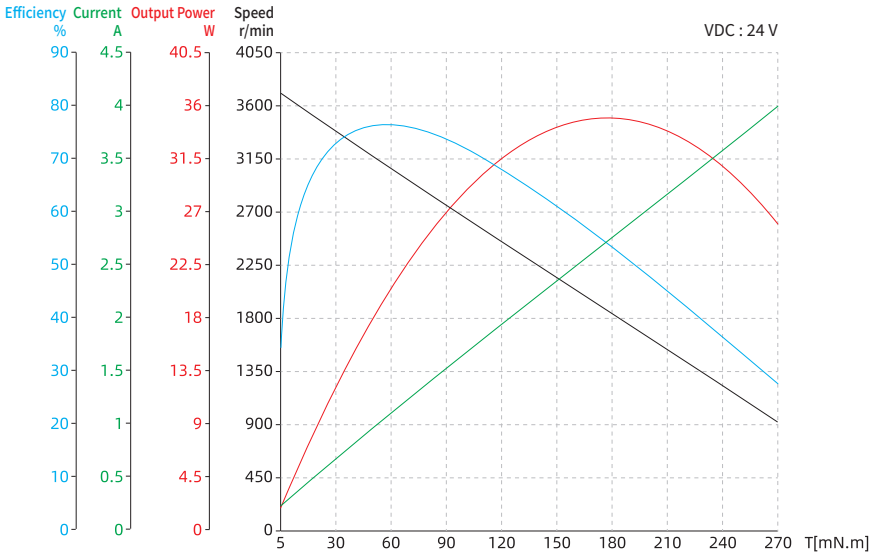

- 42ZWS63X-1

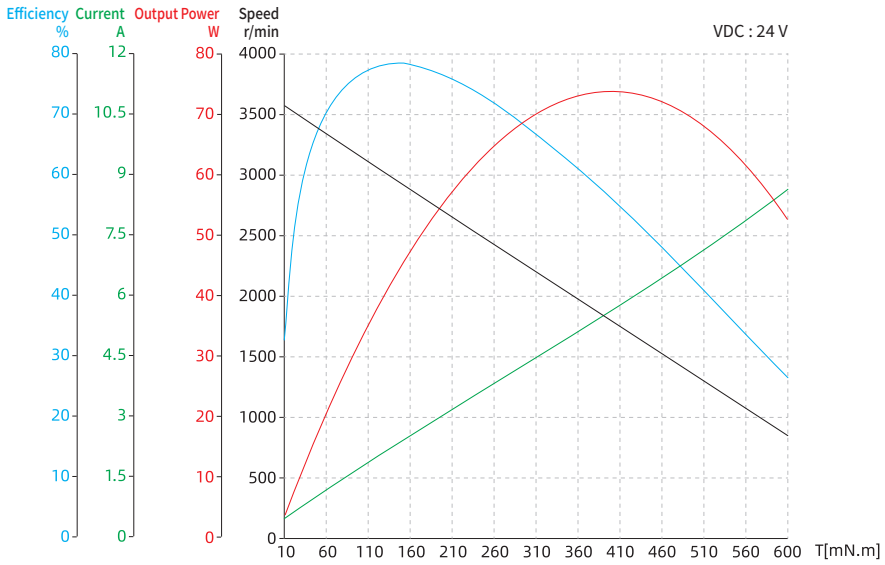

- 42ZWS75X-1

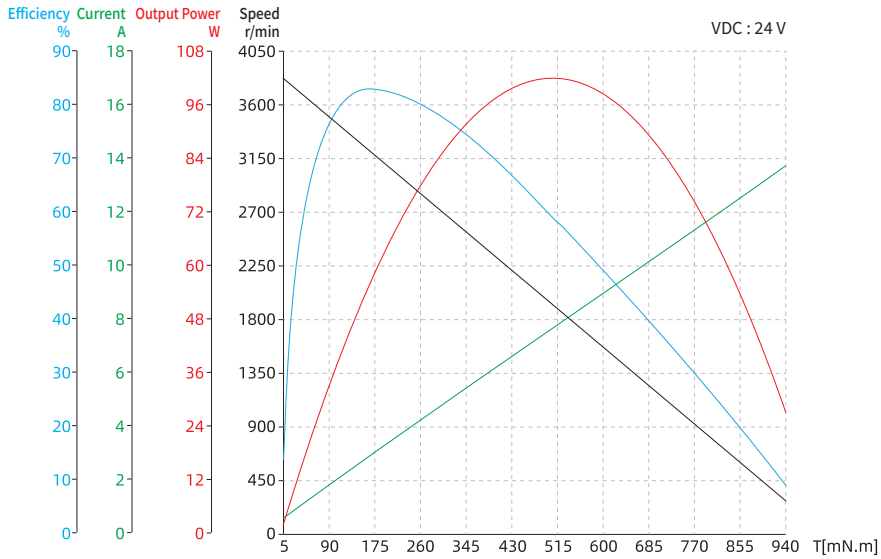

57mm Series

57mm Brushless DC Motor delivers up to 0.33 N·m rated torque and 103.7 W rated output power.

57mm motors have Star winding connection and 5 pole pairs motors with Hall sensors feedback method as standard.

In addition, gearbox and incremental encoder are available.

Motor Characteristics

Motor part number		57ZWS50X-1	57ZWS63X-1	57ZWS75X-1
Body length (LT)	mm	50±1	63±1	75±1
Pole pairs	-	5	5	5
Terminal resistance, Phase-Phase	Ω	0.958	0.473	0.301
Terminal inductance, Phase-Phase	mH	0.742	0.357	0.205
Winding connection method	-	Star connection	Star connection	Star connection
Insulation class	-	B	B	B
Duty type	-	S1	S1	S1
Feedback method	-	Hall sensors	Hall sensors	Hall sensors
Commutation angle	-	120°	120°	120°
Insulation strength (Withstand voltage)	-	500VAC/1KHz/ 1mA/1s	500VAC/1KHz/ 1mA/1s	500VAC/1KHz/ 1mA/1s
Insulation resistance	-	100MOhm 20C	100MOhm 20C	100MOhm 20C
Weight	kg	0.42	0.65	0.87
Rated voltage	V	24	24	24
Rated power	W	37.4	69.1	103.7
Rated torque	N·m	0.119	0.22	0.33
Rated speed	RPM	3000	3000	3000
Rated current	A	2.2	4.1	6
No load speed	RPM	4000	4000	4000
No load current	A	0.25	0.5	0.75
Motor efficiency	%	78	80	82
Noise (Ambient noise 20dB, test distance 1m)	dB	< 50	< 50	< 50
Enclosure - Ambient thermal resistance	K/W	0.53	0.27	0.18
Ambient temperature	°C	29	29	29
Maximum winding temperature	°C	77.4	77.4	77.4
Torque constant	N·m/A	0.054	0.054	0.055
Back-EMF constant / Effective value	V/Krpm	5.66	5.66	5.66
Peak torque	N·m	0.357	0.66	0.99
Peak current	A	6.6	12.3	18
Rotor inertia	Kg·cm²	0.19	0.38	0.56

57mm Series

Dimensional Drawings

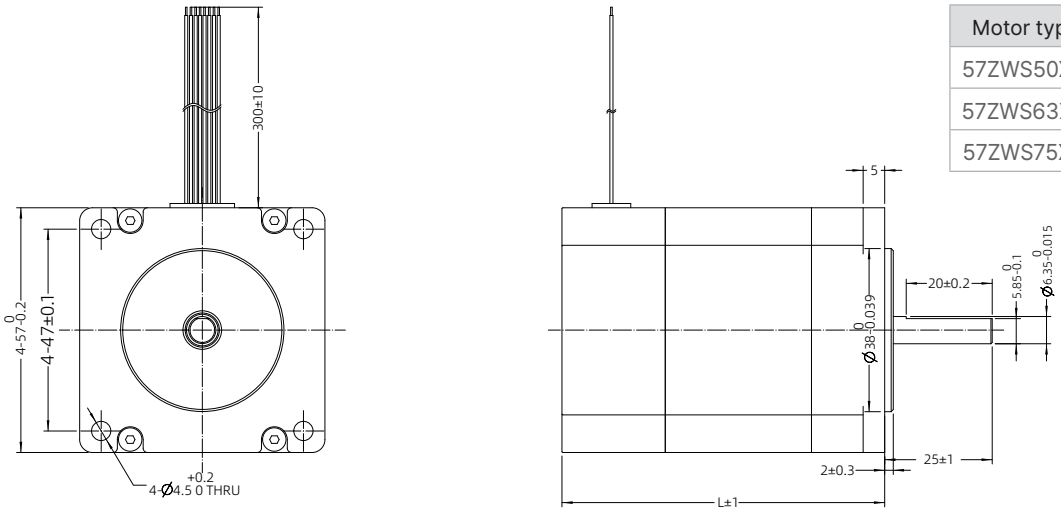

Motor type	L (mm)
57ZWS50X-1	50±1
57ZWS63X-1	63±1
57ZWS75X-1	75±1

Lead-out type	Lead-out color	Function
UL3265 AWG26	Yellow	Hall U (Hu)
	Green	Hall V (Hv)
	Blue	Hall W (Hw)
	Red	Hall power supply positive (Vcc)
	Black	Hall power supply negative (GND)
UL3265 AWG18	Yellow	U phase
	Green	V phase
	Blue	W phase

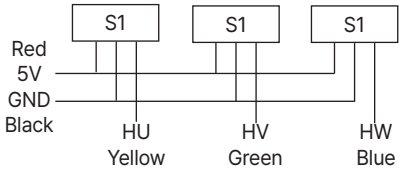

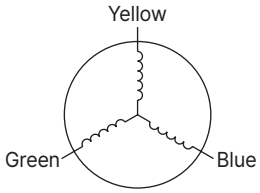

Torque Performance Curves

- **57ZWS50X-1**

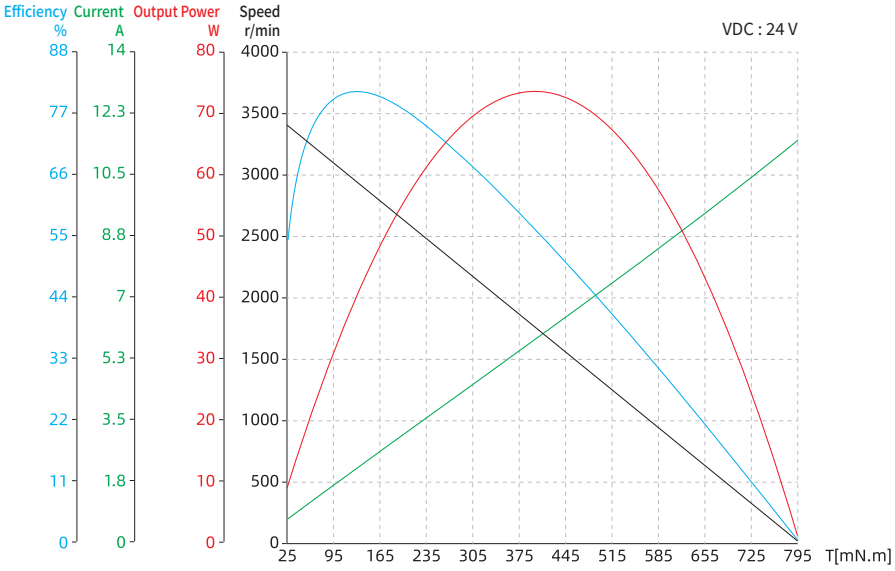

Note : All drawings are 1st-angle projection - ISO Compliant (3D models available)

57mm Series

- 57ZWS63X-1

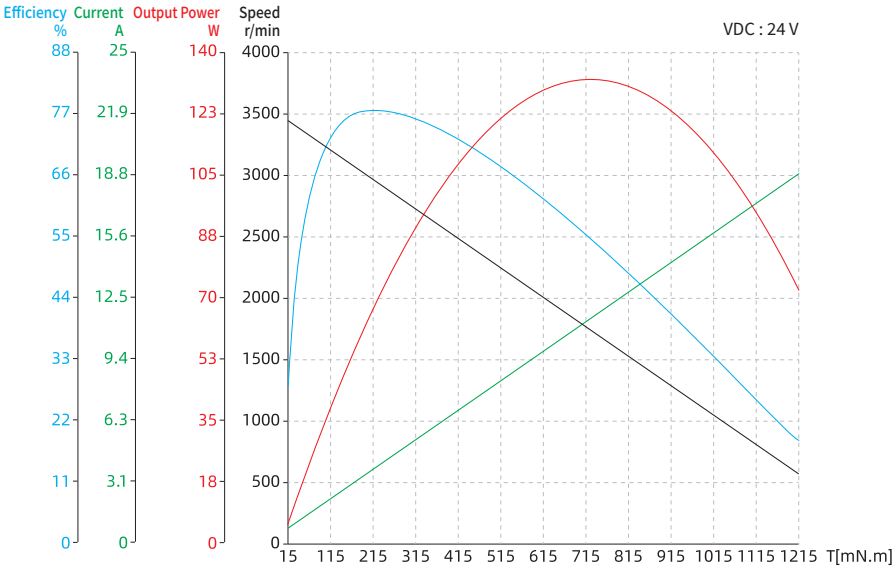

- 57ZWS75X-1

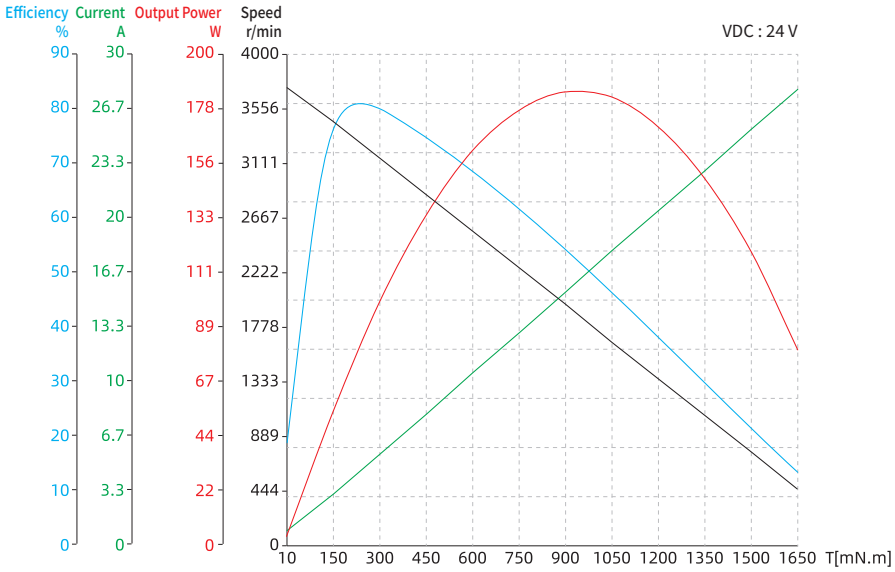

60mm Series

60mm Brushless DC Motor delivers up to 0.46 N·m rated torque and 144.5 W rated output power.

60mm motors have Star winding connection and 5 pole pairs motors with Hall sensors feedback method as standard.

In addition, gearbox and incremental encoder are available.

Motor Characteristics

Motor part number		60ZWS50X-1	60ZWS63X-1	60ZWS75X-1
Body length (LT)	mm	50±1	63±1	75±1
Pole pairs	-	5	5	5
Terminal resistance, Phase-Phase	Ω	0.886	0.334	0.233
Terminal inductance, Phase-Phase	mH	0.682	0.305	0.183
Winding connection method	-	Star connection	Star connection	Star connection
Insulation class	-	B	B	B
Duty type	-	S1	S1	S1
Feedback method	-	Hall sensors	Hall sensors	Hall sensors
Commutation angle	-	120°	120°	120°
Insulation strength (Withstand voltage)	-	500VAC/1KHz/ 1mA/1s	500VAC/1KHz/ 1mA/1s	500VAC/1KHz/ 1mA/1s
Insulation resistance	-	100MOhm 20C	100MOhm 20C	100MOhm 20C
Weight	kg	0.51	0.77	1
Rated voltage	V	24	24	24
Rated power	W	47.1	97.4	144.5
Rated torque	N·m	0.15	0.31	0.46
Rated speed	RPM	3000	3000	3000
Rated current	A	2.7	5.5	8.2
No load speed	RPM	3500	3500	3500
No load current	A	0.29	0.58	0.87
Motor efficiency	%	81.1	82.6	83
Noise (Ambient noise 20dB, test distance 1m)	dB	< 50	< 50	< 50
Enclosure - Ambient thermal resistance	K/W	0.57	0.28	0.19
Ambient temperature	°C	30	30	30
Maximum winding temperature	°C	87	87	87
Torque constant	N·m/A	0.056	0.056	0.056
Back-EMF constant / Effective value	V/Krpm	5.87	5.87	5.87
Peak torque	N·m	0.45	0.93	1.38
Peak current	A	8.1	16.5	24.6
Rotor inertia	Kg·cm²	0.22	0.44	0.66

For customized options, please contact DINGS' or your local distributor

60mm Series

Dimensional Drawings

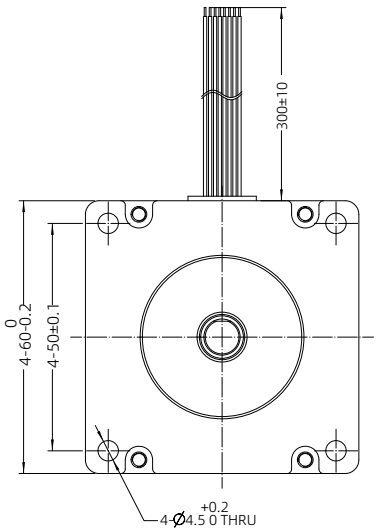

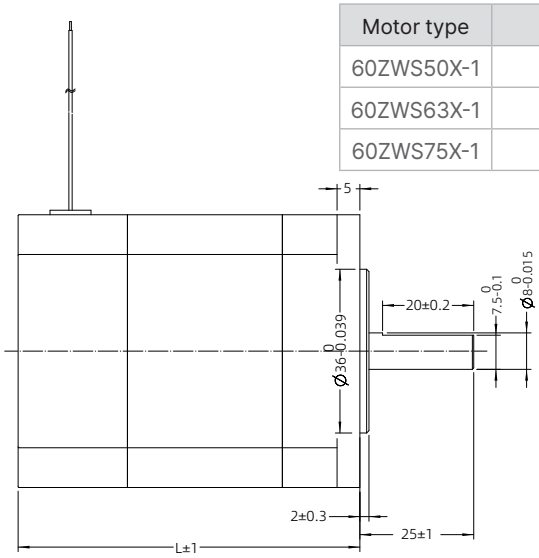

Motor type	L (mm)
60ZWS50X-1	50±1
60ZWS63X-1	63±1
60ZWS75X-1	75±1

Lead-out type	Lead-out color	Function
UL3265 AWG26	Yellow	Hall U (Hu)
	Green	Hall V (Hv)
	Blue	Hall W (Hw)
	Red	Hall power supply positive (Vcc)
	Black	Hall power supply negative (GND)
UL3265 AWG18	Yellow	U phase
	Green	V phase
	Blue	W phase

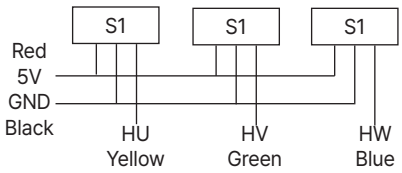

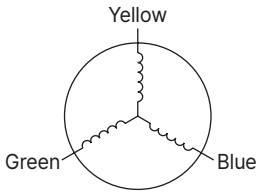

Torque Performance Curves

- 60ZWS50X-1

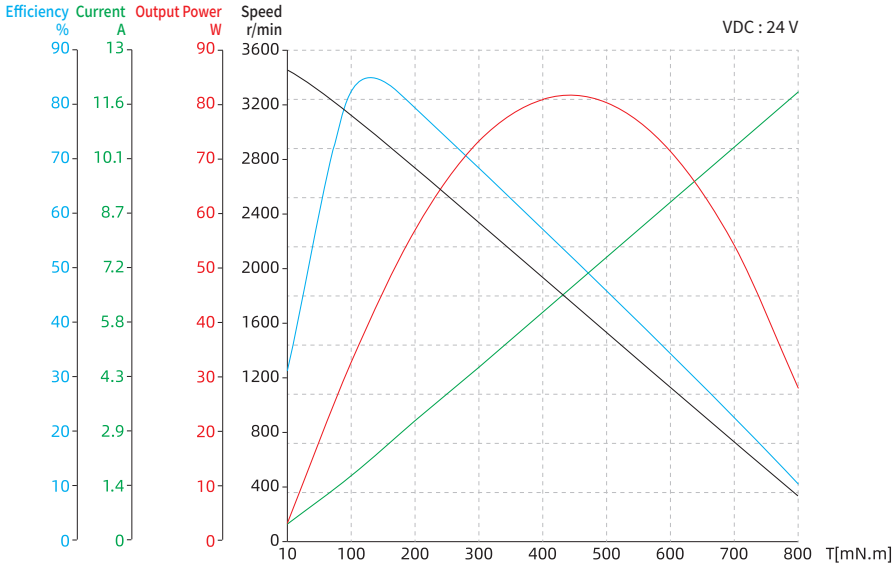

Note : All drawings are 1st-angle projection - ISO Compliant (3D models available)

- 60ZWS63X-1

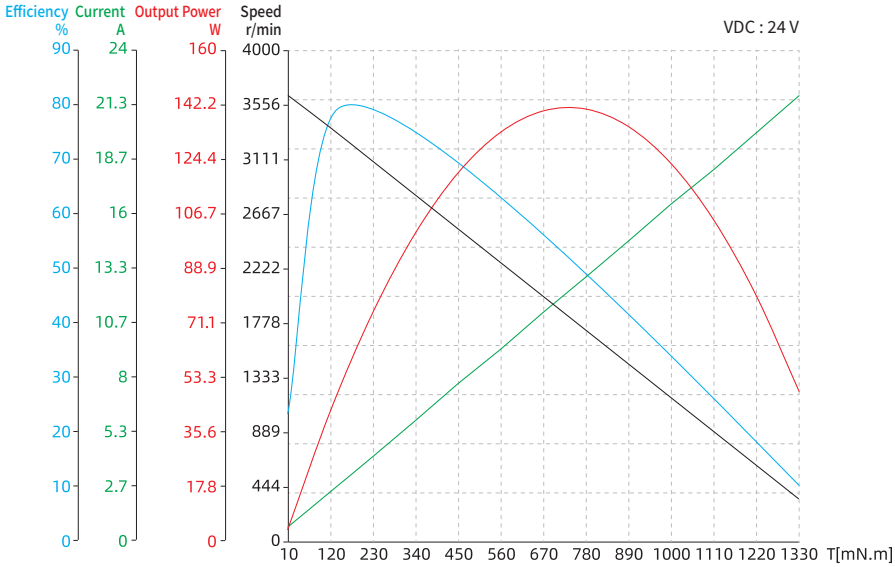

- 60ZWS75X-1

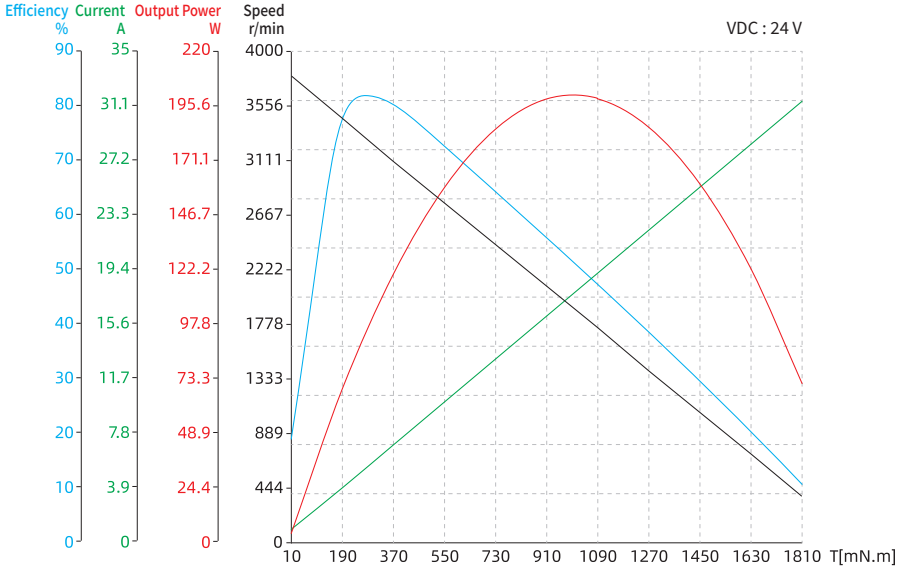

86mm Series

86mm Brushless DC Motor delivers up to 1.5 N·m rated torque and 471.2 W rated output power.

86mm motors have Star winding connection and 5 pole pairs motors with Hall sensors feedback method as standard.

In addition, gearbox and incremental encoder are available.

Motor Characteristics

Motor part number		86ZWS61X-1	86ZWS81X-1	86ZWS101X-1
Body length (LT)	mm	61±1	81±1	101±1
Pole pairs	-	5	5	5
Terminal resistance, Phase-Phase	Ω	0.492	0.21	0.13
Terminal inductance, Phase-Phase	mH	1.139	0.44	0.25
Winding connection method	-	Star connection	Star connection	Star connection
Insulation class	-	B	B	B
Duty type	-	S1	S1	S1
Feedback method	-	Hall sensors	Hall sensors	Hall sensors
Commutation angle	-	120°	120°	120°
Insulation strength (Withstand voltage)	-	500VAC/1KHz/ 1mA/1s	500VAC/1KHz/ 1mA/1s	500VAC/1KHz/ 1mA/1s
Insulation resistance	-	100MOhm 20C	100MOhm 20C	100MOhm 20C
Weight	kg	1.38	2.18	3
Rated voltage	V	48	48	48
Rated power	W	157.1	314.1	471.2
Rated torque	N·m	0.5	1	1.5
Rated speed	RPM	3000	3000	3000
Rated current	A	4.7	9.4	14.1
No load speed	RPM	3600	3600	3600
No load current	A	0.35	0.7	1.05
Motor efficiency	%	86.5	85.5	83.7
Noise (Ambient noise 20dB, test distance 1m)	dB	< 50	< 50	< 50
Enclosure - Ambient thermal resistance	K/W	0.61	0.31	0.2
Ambient temperature	°C	30	30	30
Maximum winding temperature	°C	90	90	90
Torque constant	N·m/A	0.106	0.106	0.106
Back-EMF constant / Effective value	V/Krpm	11.1	11.1	11.1
Peak torque	N·m	1.5	3	4.5
Peak current	A	14.1	28.2	42.3
Rotor inertia	Kg·cm²	1.4	2.8	4.2

For customized options, please contact DINGS' or your local distributor

86mm Series

Dimensional Drawings

Motor	L (mm)
86ZWS61X-1	61±1
86ZWS81X-1	81±1
86ZWS101X-1	101±1

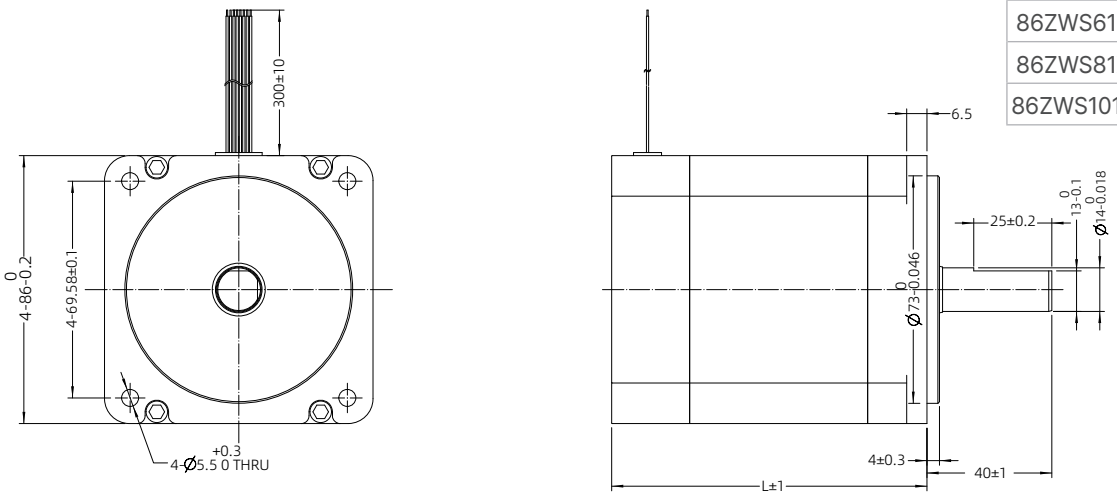

Lead-out type	Lead-out color	Function
UL3265 AWG26	Yellow	Hall U (Hu)
	Green	Hall V (Hv)
	Blue	Hall W (Hw)
	Red	Hall power supply positive (Vcc)
	Black	Hall power supply negative (GND)
UL3265 AWG18	Yellow	U phase
	Green	V phase
	Blue	W phase

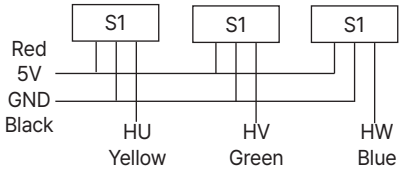

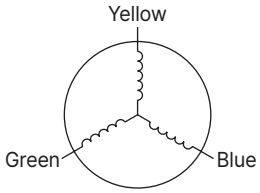

Torque Performance Curves

- **86ZWS61X-1**

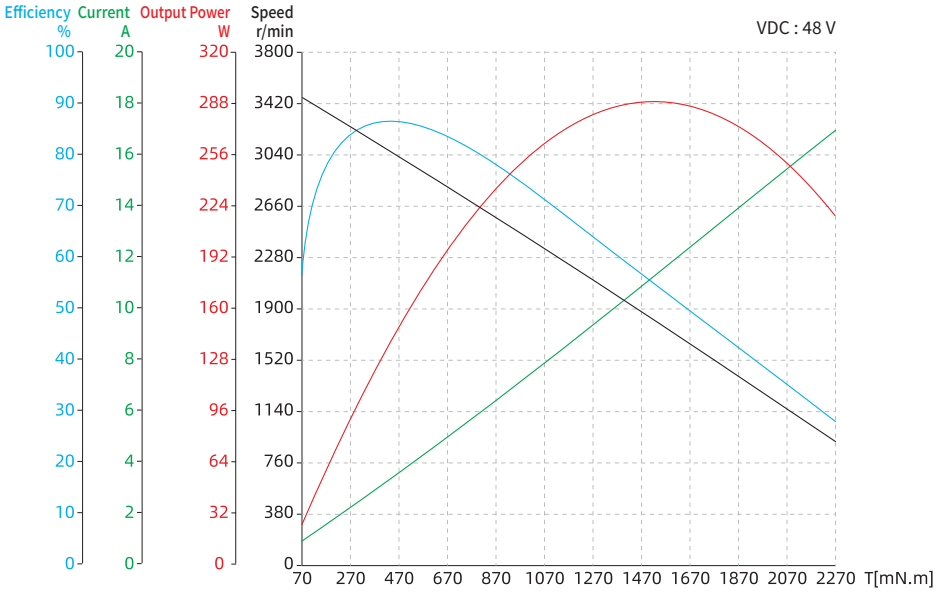

Note : All drawings are 1st-angle projection - ISO Compliant (3D models available)

86mm Series

- 86ZWS81X-1

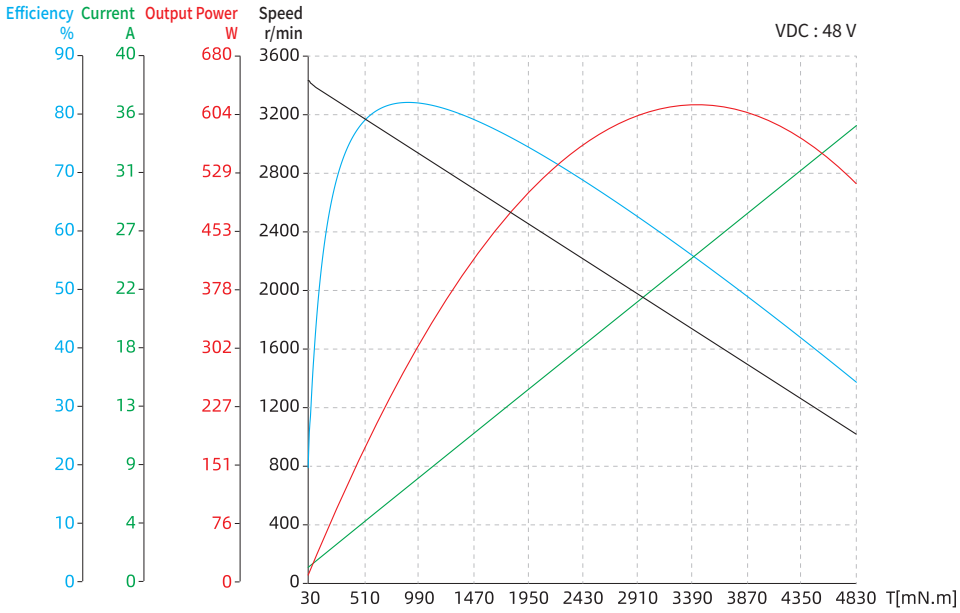

- 86ZWS101X-1

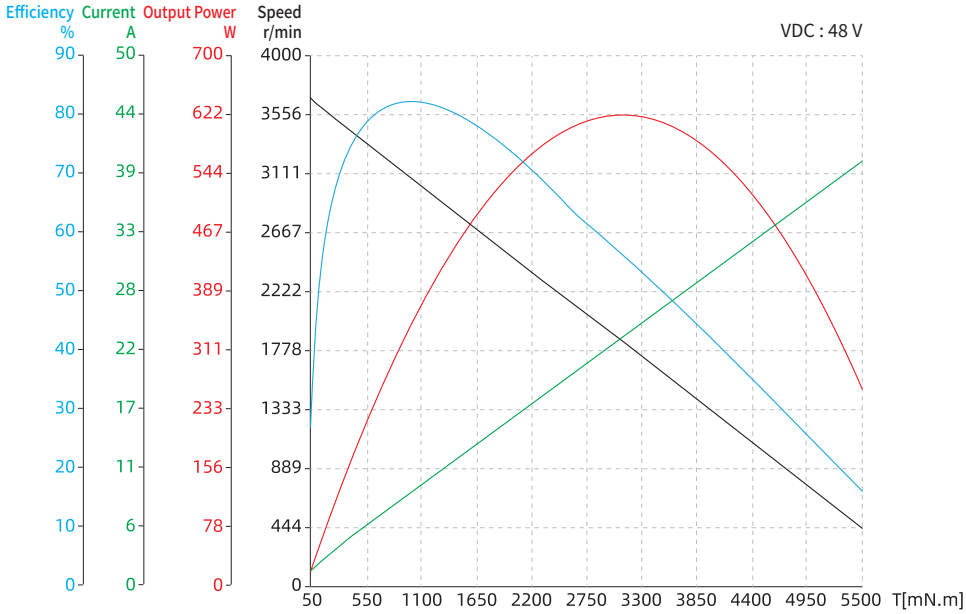

110mm Series

110mm Brushless DC Motor delivers up to 4.6 N·m rated torque and 710 W rated output power.

110mm motor has Star winding connection and 5 pole pairs motors with Hall sensors feedback method as standard.

In addition, gearbox and incremental encoder are available.

Motor Characteristics

Motor part number		110ZWS132XE-1
Body length (LT)	mm	131±1
Pole pairs	-	5
Terminal resistance, Phase-Phase	Ω	1.04
Terminal inductance, Phase-Phase	mH	3.658
Winding connection method	-	Star connection
Insulation class	-	B
Duty type	-	S1
Commutation angle	-	120°
Insulation strength (Withstand voltage)	-	1000VAC/1KHz/1mA/1s
Insulation resistance	-	100MOhm 20C
Weight	kg	3
Rated voltage	V	120
Rated power	W	710
Rated torque	N·m	4.6
Rated speed	RPM	1500
Rated current	A	9.6
No load speed	RPM	1850
No load current	A	0.65
Motor efficiency	%	90
Noise (Ambient noise 20dB, test distance 1m)	dB	< 50
Enclosure - Ambient thermal resistance	K/W	0.36
Ambient temperature	°C	20
Maximum winding temperature	°C	88
Torque constant	N·m/A	0.479
Back-EMF constant / Effective value	V/Krpm	67.83
Peak torque	N·m	13.8
Peak current	A	28.8
Rotor inertia	Kg·cm²	10.2

For customized options, please contact DINGS' or your local distributor

110mm Series

Dimensional Drawings

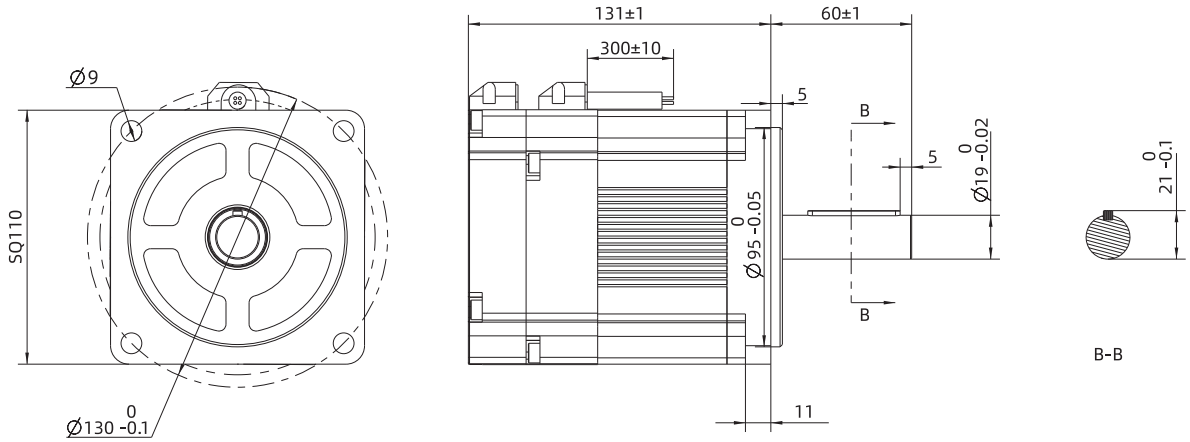

Lead-out type	Lead-out color	Function
UL3265 AWG16	Yellow	U phase
	Red	V phase
	Black	W phase

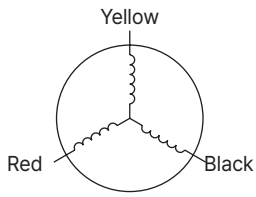

Torque Performance Curves

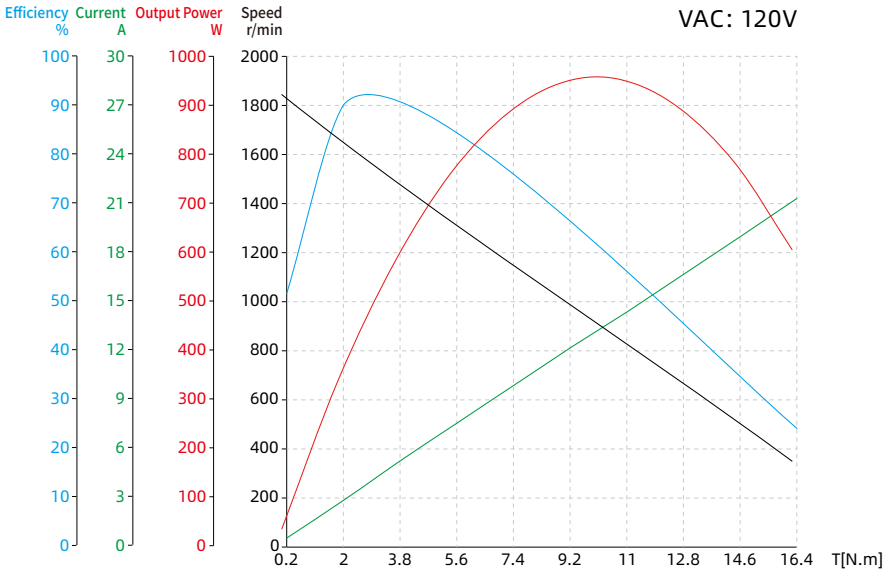

Note : All drawings are 1st-angle projection - ISO Compliant (3D models available)

Accessories and Options

Precision planetary gearbox

6PGX

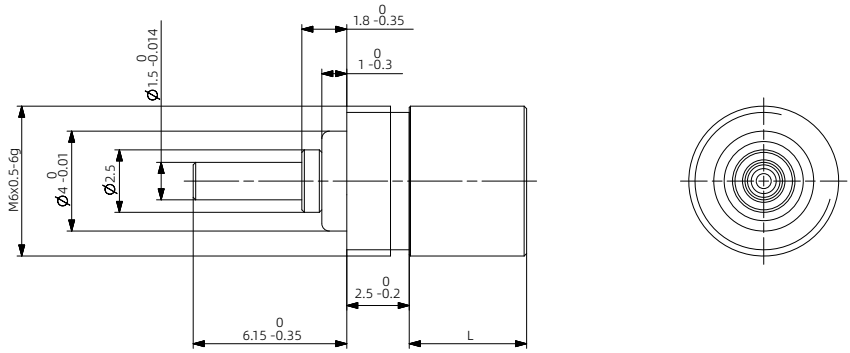

Stage	-	Stage 1	Stage 2	Stage 3
Gear ratio	X : 1	3.9	15	57
Max. backlash	°	1.8	2.0	2.2
Max. continuous output power	W	0.65	0.4	0.2
Max. peak output power	W	0.8	0.5	0.25
Max. continuous input speed	rpm	20000	20000	20000
Max. peak input speed	rpm	25000	25000	25000
Max. continuous torque	N·m	0.002	0.005	0.01
Max. peak torque	N·m	0.005	0.01	0.02
Max. efficiency	%	88	77	68
Weight	g	1.6	2	2.4
Gearbox length L	mm	4.7	7.2	9.7

8PGX

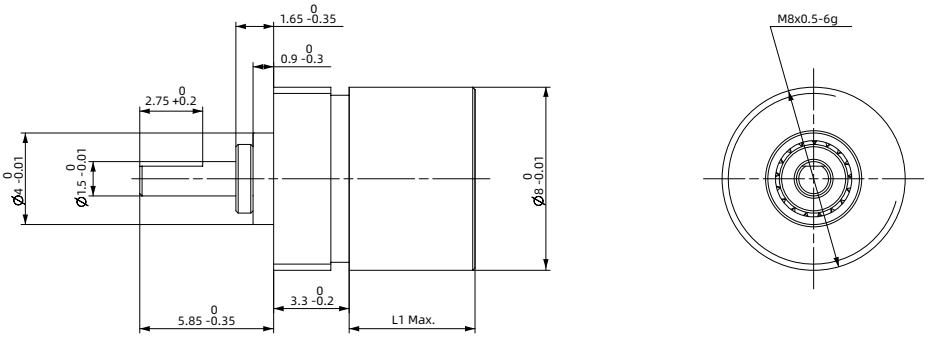

Stage	-	Stage 1	Stage 2	Stage 3
Gear ratio	X : 1	4	16	64
Max. backlash	°	1.8	2.0	2.2
Max. continuous output power	W	0.84	0.52	0.4
Max. peak output power	W	1.05	0.65	0.5
Max. continuous input speed	rpm	14000	14000	14000
Max. peak input speed	rpm	20000	20000	20000
Max. continuous torque	N·m	0.01	0.02	0.06
Max. peak torque	N·m	0.015	0.03	0.09
Max. efficiency	%	90	81	72
Weight	g	2.6	3.2	3.8
Gearbox length L	mm	5.5	8.1	10.7

Accerrosies and Options

10PGX

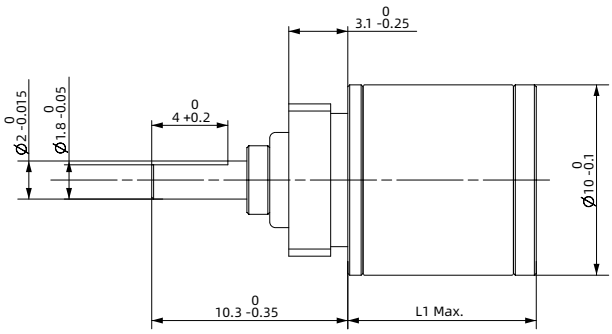

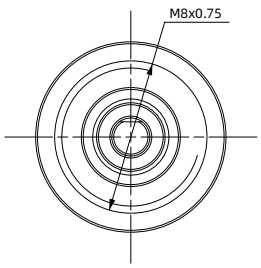

Stage	-	Stage 1	Stage 2	Stage 3	Stage 4
Gear ratio	X : 1	4.25	18	77	326
Max. backlash	°	1.5	1.8	2.0	2.2
Max. continuous output power	W	1.6	1.2	1.0	0.4
Max. peak output power	W	2	1.5	1.3	0.5
Max. continuous input speed	rpm	14000	14000	14000	14000
Max. peak input speed	rpm	18000	18000	18000	18000
Max. continuous torque	N·m	0.01	0.03	0.10	0.15
Max. peak torque	N·m	0.02	0.05	0.15	0.2
Max. efficiency	%	90	81	73	65
Weight	g	6.8	7.3	7.8	8.3
Gearbox length L	mm	10.1	13.6	17.1	20.6

12PGX

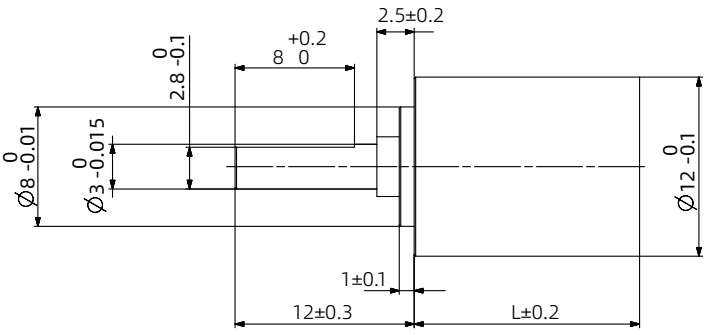

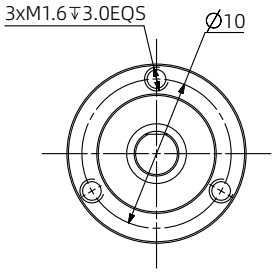

Stage	-	Stage 1	Stage 2	Stage 3	Stage 4
Gear ratio	X : 1	4.3	18.4	79	337
Max. backlash	°	1.2	1.5	1.8	2.1
Max. continuous output power	W	2.0	1	0.5	0.25
Max. peak output power	W	2.5	1.25	0.65	0.3
Max. continuous input speed	rpm	16000	16000	16000	16000
Max. peak input speed	rpm	20000	20000	20000	20000
Max. continuous torque	N·m	0.08	0.11	0.14	0.17
Max. peak torque	N·m	0.1	0.14	0.18	0.21
Max. efficiency	%	90	80	75	65
Weight	g	9	12	15	18
Gearbox length L	mm	11.3	15.1	18.9	22.7

Accerrosies and Options

- **14PGX**

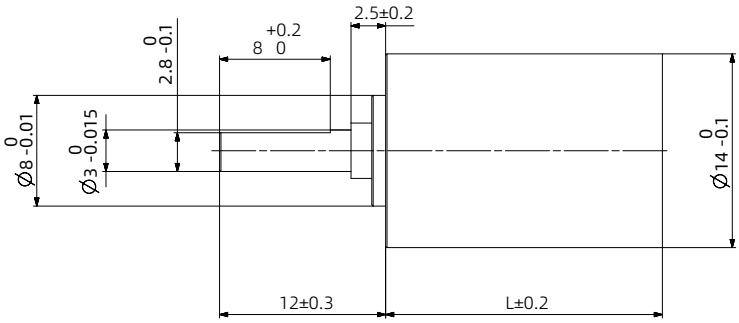

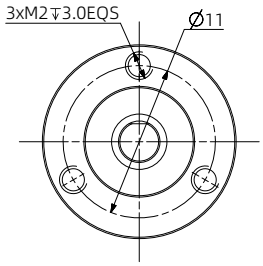

Stage	-	Stage 1	Stage 2	Stage 3	Stage 4
Gear ratio	X : 1	4.3	18.4	79	337
Max. backlash	°	1.1	1.3	1.45	1.7
Max. continuous output power	W	4.0	2.0	1.0	0.4
Max. peak output power	W	5.0	2.5	1.25	0.5
Max. continuous input speed	rpm	14000	16000	16000	16000
Max. peak input speed	rpm	18000	20000	20000	20000
Max. continuous torque	N·m	0.16	0.2	0.25	0.3
Max. peak torque	N·m	0.2	0.25	0.31	0.38
Max. efficiency	%	90	80	75	65
Weight	g	11	15	19	23
Gearbox length L	mm	11.8	16.1	20.4	24.7

- **16PGX**

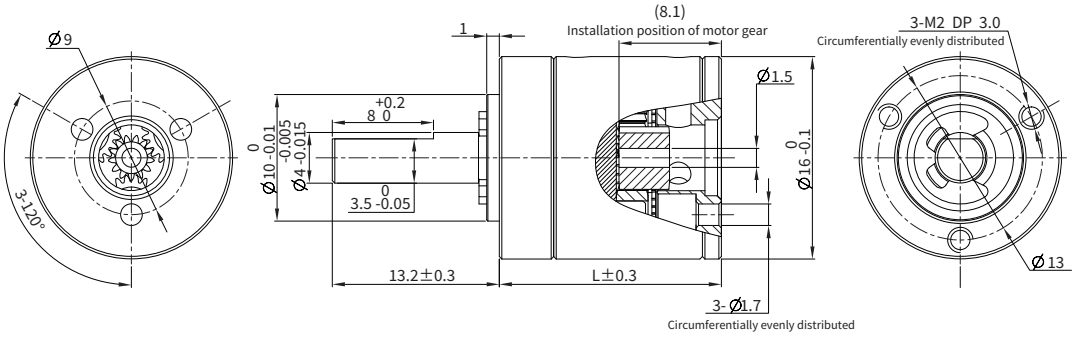

Stage	-	Stage 1	Stage 2	Stage 3	Stage 4
Gear ratio	X : 1	3.9, 5.3	16, 21, 28	62, 83, 111, 150	243, 326, 439, 590, 794
Max. backlash	°	1.0	1.2	1.3	1.4
Max. continuous output power	W	6.5	3.2	1.6	0.6
Max. peak output power	W	8.0	4.0	2.0	0.75
Max. continuous input speed	rpm	12000	14000	14000	14000
Max. peak input speed	rpm	15000	18000	18000	18000
Max. continuous torque	N·m	0.2	0.25	0.35	0.45
Max. peak torque	N·m	0.25	0.35	0.45	0.55
Max. efficiency	%	90	80	75	65
Weight	g	25	31	37	42
Gearbox length L	mm	18.7	25.5	30.2	35

Accerrosies and Options

22PGX

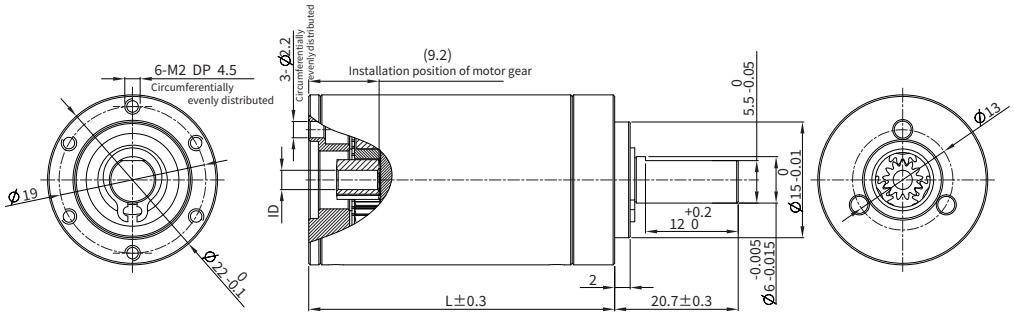

Stage	-	Stage 1	Stage 2	Stage 3	Stage 4
Gear ratio	X : 1	3.9, 5.3	16, 21, 28	62, 83, 111, 150	243, 326, 439, 590, 794
Max. backlash	°	0.85	1.05	1.2	1.35
Max. continuous output power	W	24	12	6.0	1.6
Max. peak output power	W	30	15	7.5	2.0
Max. continuous input speed	rpm	8000	10000	10000	10000
Max. peak input speed	rpm	10000	12500	12500	12500
Max. continuous torque	N·m	0.5	0.7	1.2	1.5
Max. peak torque	N·m	0.6	0.9	1.5	1.9
Max. efficiency	%	90	81	74	66
Weight	g	59	83	97	112
Gearbox length L	mm	22.3	33	39.6	46.3

28PGX

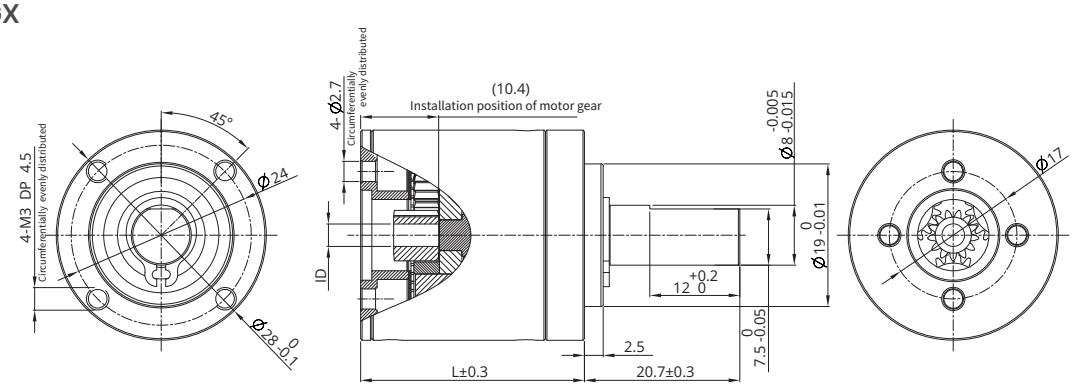

Stage	-	Stage 1	Stage 2	Stage 3	Stage 4
Gear ratio	X : 1	3.9, 5.3	16, 21, 28	62, 83, 111, 150	243, 326, 439, 590, 794
Max. backlash	°	0.5	0.6	0.7	0.75
Max. continuous output power	W	100	50	25	8.0
Max. peak output power	W	125	62	31	10
Max. continuous input speed	rpm	6000	7000	7000	7000
Max. peak input speed	rpm	7500	8750	8750	8750
Max. continuous torque	N·m	1.25	2.9	5.0	5.0
Max. peak torque	N·m	1.6	3.6	6.3	6.3
Max. efficiency	%	90	81	72	65
Weight	g	103	150	174	198
Gearbox length L	mm	24.2	36.9	43.5	50.2

Accerrosies and Options

- **36PGX**

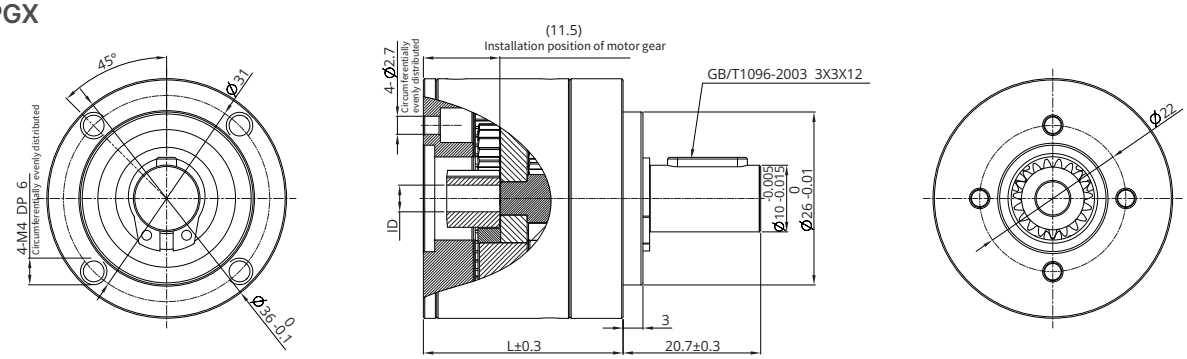

Stage	-	Stage 1	Stage 2	Stage 3	Stage 4
Gear ratio	X : 1	3.9, 5.3	16, 21, 28	62, 83, 111, 150	243, 326, 439, 590, 794
Max. backlash	°	0.5	0.6	0.7	0.8
Max. continuous output power	W	185	90	45	15
Max. peak output power	W	230	115	60	19
Max. continuous input speed	rpm	6000	6000	6000	6000
Max. peak input speed	rpm	7500	7500	7500	7500
Max. continuous torque	N·m	2.3	5.4	9.3	9.3
Max. peak torque	N·m	2.9	6.8	11.6	11.6
Max. efficiency	%	90	80	72	65
Weight	g	156	238	277	315
Gearbox length L	mm	30	44.7	51.3	58

- **42PGX**

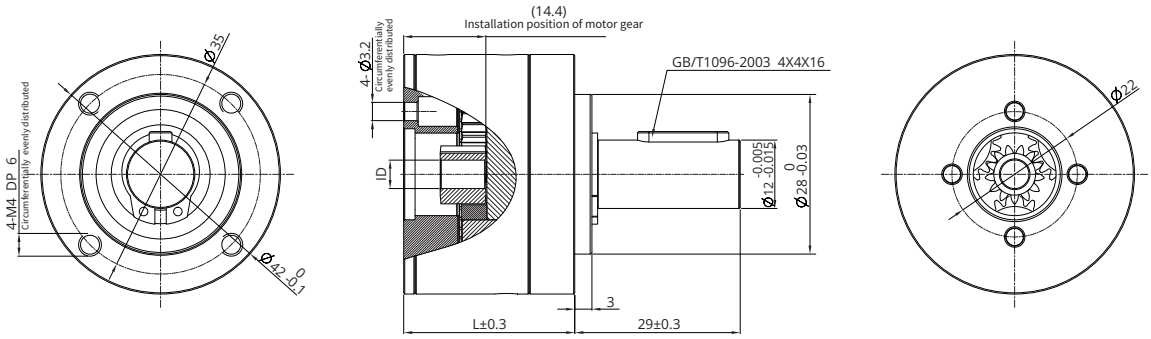

Stage	-	Stage 1	Stage 2	Stage 3	Stage 4
Gear ratio	X : 1	3.9, 5.3	16, 21, 28	62, 83, 111, 150	243, 326, 439, 590, 794
Max. backlash	°	0.3	0.4	0.5	0.6
Max. continuous output power	W	480	200	85	20
Max. peak output power	W	600	250	106	25
Max. continuous input speed	rpm	6000	6000	6000	6000
Max. peak input speed	rpm	7500	7500	7500	7500
Max. continuous torque	N·m	3.0	7.5	15	15
Max. peak torque	N·m	4.5	11.3	22.5	22.5
Max. efficiency	%	90	81	72	64
Weight	g	252	405	476	544
Gearbox length L	mm	36.1	54.9	63.6	72.4

G Slotless Brushless DC Motor

DINGS' Slotless Brushless DC Motors can avoid the pulsation of air gap magnetic induction caused by uneven magnetic resistance in the teeth.

It can eliminate the pulse loss in the armature core and the surface loss on the main pole surface.

Slotless Brushless DC Motor has high durability, low electrical noise and high efficiency. Maximum efficiency of motor reaches 91% and this motor is suitable for the servo system which needs quick movement and high power.

Part number construction	G-2
6mm	G-3
8mm	G-5
10mm	G-7
12mm	G-9
13mm	G-11
14mm	G-13
16 mm	G-15
22 mm	G-17
28 mm	G-19
30 mm	G-21
36 mm	G-23
42 mm	G-25
Accessories and options	G-27

Part Number Construction

00	ZWW	C	00	L	EK	E	X	-51_5	S	M	S	-1
①	②	③	④	⑤	⑥	⑦	⑧	⑨	⑩	⑪	⑫	⑬

① Motor Size

Motor Size(mm)	6	8	10	12	13	14	16	22	28	30	36	42

② Product Name

ZWW = Slotless Brushless DC Motor

③ Motor Shape

C = Circular Type

S = Square Type

④ Motor Length

Unit : mm

When the length involves decimal points, use "_" instead

⑤ Motor Casing

L = Aluminum

T = Stainless steel / Iron

X = No housing

⑥ Option

EKX = Encoder (X = Encoder Resolution)

B = Brake

GX= Gearbox (X = Gear Ratio)

Note: When selecting multiple options, please arrange them in alphabetical order (e.g., "BEG").

⑦ Structure

E = External type

N = Non-Captive type

C = Electric Cylinder (Captive) type

K = Kaptive type

⑧ Lead Screw Code

Please refer to lead screw code selection table

⑨ Screw Length / Stroke

Kaptive = stroke distance

Non-captive = total length of screw

External = screw extension length from the mounting flange

⑩ Screw Surface Treatment

T = Teflon coating

S = Standard (No teflon coating)

⑪ End Machining

M = Metric

U = UNC

S = Smooth

C = Customization

N = None

⑫ Nut Style

S = Standard flange nut

A = Anti-backlash nut

C = Customized nut

⑬ Customer Sequence Number

Example

Part Number	16ZWWC40EK-001
Description	Motor diameter 16mm Slotless BLDC circular type Body length 40mm Encoder Customization No.001

6mm Series

Motor Characteristics

Motor part number	6ZWWC20	
Pole pairs	-	1
Terminal resistance, Phase-Phase	Ω	5.9
Terminal inductance, Phase-Phase	mH	0.04
Winding connection method	-	Delta connection
Insulation class	-	B
Duty type	-	S2
Insulation strength (Withstand voltage)	-	300VAC/1KHz/1mA/1s
Insulation resistance	-	100MΩ/300VDC
Weight	g	3
Rated voltage	V	6
Rated power	W	1
Rated torque	mN·m	0.3
Rated speed	RPM	32000
Rated current	A	0.46
No load speed	RPM	48500
No load current	A	0.09
Motor efficiency	%	37
Noise (Ambient noise 20dB, test distance 1m)	dB	<50
Thermal resistance	K/W	39.9
Thermal time constant	S	70
Ambient temperature	°C	22.3
Max winding temperature	°C	63
Torque constant	mN·m/A	0.65
Back-EMF constant - peak value	V/Krpm	0.1
Back-EMF constant - effective value	V/Krpm	0.07
Peak torque	mN·m	0.66
Peak current	A	1
Rotor inertia	g·cm²	0.005
Mechanical time constant	ms	6.92
End bell	-	Stainless steel
Bearing	-	Deep groove ball bearing
Magnet	-	Sinter NdFeB
Rotation shaft	-	Carbon steel

For customized options, please contact DINGS' or your local distributor

Dimensional Drawings

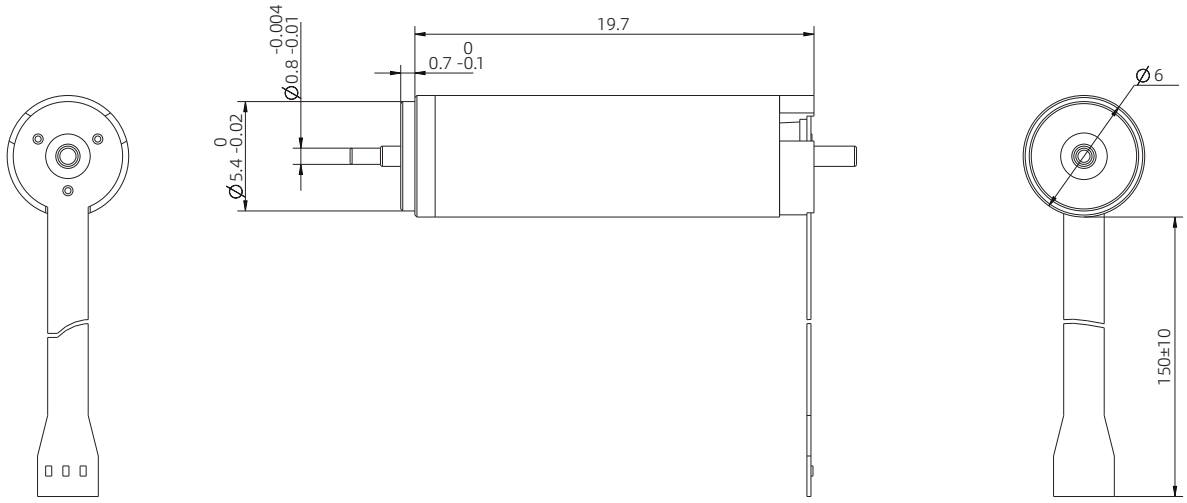

Phase sequence: UVW

Torque Performance Curves

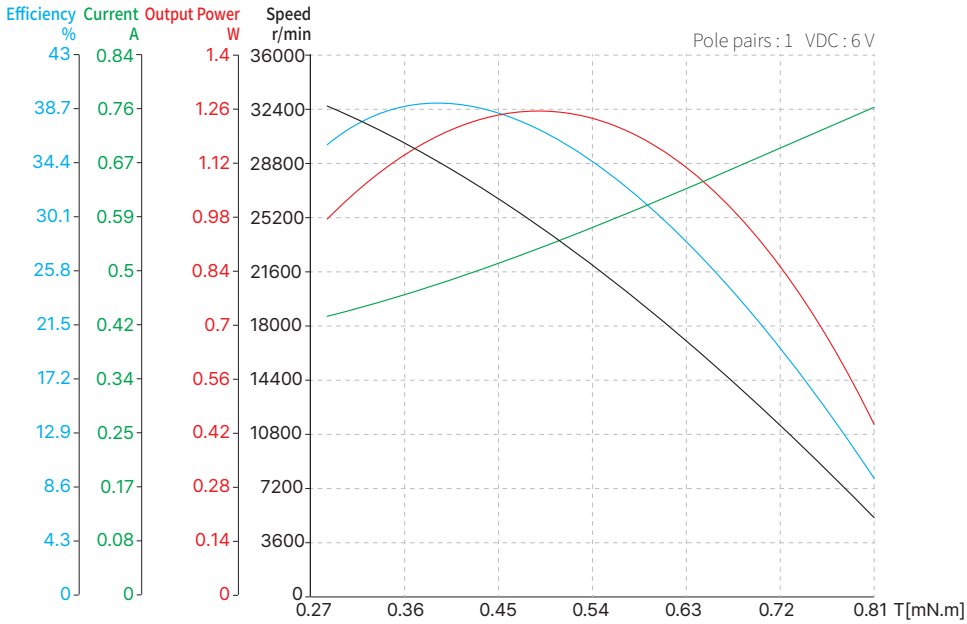

Note : All drawings are 1st-angle projection - ISO Compliant (3D models available)

8mm Series

Motor Characteristics

Motor part number	8ZWWC25	
Pole pairs	-	1
Terminal resistance, Phase-Phase	Ω	6.1
Terminal inductance, Phase-Phase	mH	0.085
Winding connection method	-	Delta connection
Insulation class	-	B
Duty type	-	S2
Insulation strength (Withstand voltage)	-	300VAC/1KHz/1mA/1s
Insulation resistance	-	100MΩ/300VDC
Weight	g	7.3
Rated voltage	V	12
Rated power	W	3.25
Rated torque	mN·m	0.8
Rated speed	RPM	38200
Rated current	A	0.45
No load speed	RPM	48000
No load current	A	0.056
Motor efficiency	%	60
Noise (Ambient noise 20dB, test distance 1m)	dB	<50
Thermal resistance	K/W	51.2
Thermal time constant	S	150
Ambient temperature	°C	22.3
Max winding temperature	°C	80
Torque constant	mN·m/A	1.77
Back-EMF constant - peak value	V/Krpm	0.26
Back-EMF constant - effective value	V/Krpm	0.19
Peak torque	mN·m	3.49
Peak current	A	2
Rotor inertia	g·cm²	0.016
Mechanical time constant	ms	3.11
End bell	-	Stainless steel
Bearing	-	Deep groove ball bearing
Magnet	-	Sinter NdFeB
Rotation shaft	-	Carbon steel

For customized options, please contact DINGS' or your local distributor

Dimensional Drawings

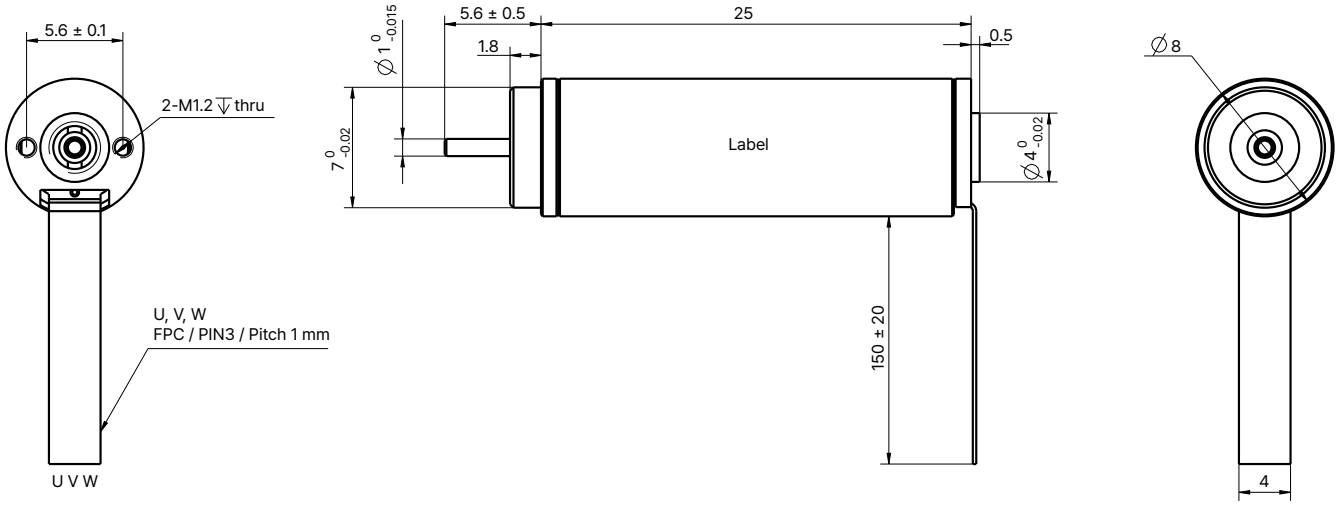

Torque Performance Curves

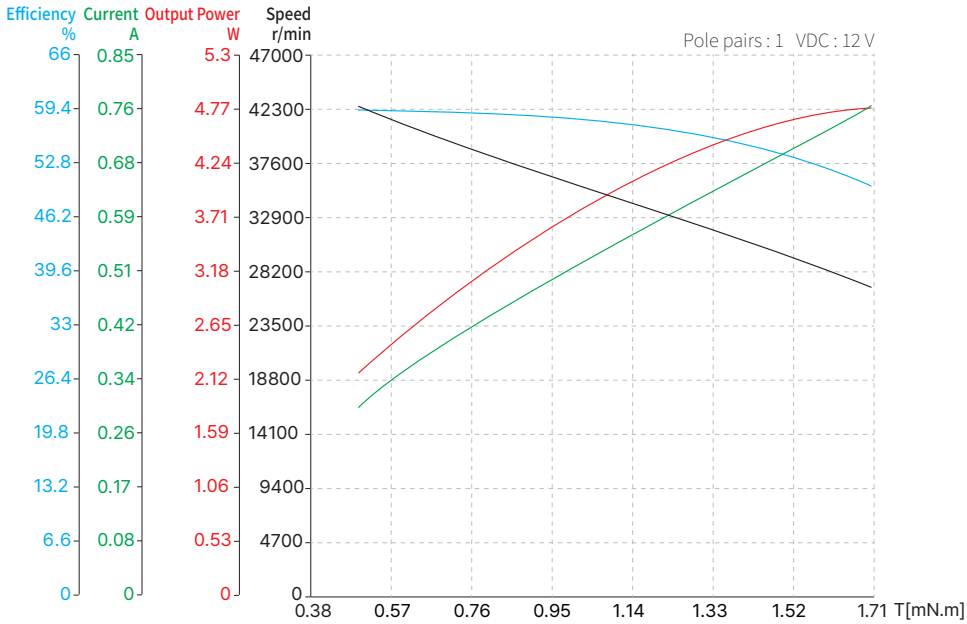

Note : All drawings are 1st-angle projection - ISO Compliant (3D models available)

10mm Series

Motor Characteristics

Motor part number	10ZWWC26	
Pole pairs	-	1
Terminal resistance, Phase-Phase	Ω	4.5
Terminal inductance, Phase-Phase	mH	0.15
Winding connection method	-	Delta connection
Insulation class	-	B
Duty type	-	S2
Feedback method	-	Hall sensor
Commutation angle	-	120°
Insulation strength (Withstand voltage)	-	300VAC/1KHz/1mA/1s
Insulation resistance	-	100MΩ/300VDC
Weight	g	14.3
Rated voltage	V	12
Rated power	W	4.4
Rated torque	mN·m	1.5
Rated speed	RPM	28500
Rated current	A	0.56
No load speed	RPM	35000
No load current	A	0.065
Motor efficiency	%	67
Noise (Ambient noise 20dB, test distance 1m)	dB	<50
Thermal resistance	K/W	40.2
Thermal time constant	S	269
Ambient temperature	°C	22.3
Max winding temperature	°C	80
Torque constant	mN·m/A	2.68
Back-EMF constant - peak value	V/Krpm	0.4
Back-EMF constant - effective value	V/Krpm	0.28
Peak torque	mN·m	7.15
Peak current	A	3
Rotor inertia	g·cm²	0.026
Mechanical time constant	ms	1.63
End bell	-	Stainless steel
Bearing	-	Deep groove ball bearing
Magnet	-	Sinter NdFeB
Rotation shaft	-	Carbon steel

For customized options, please contact DINGS' or your local distributor

Dimensional Drawings

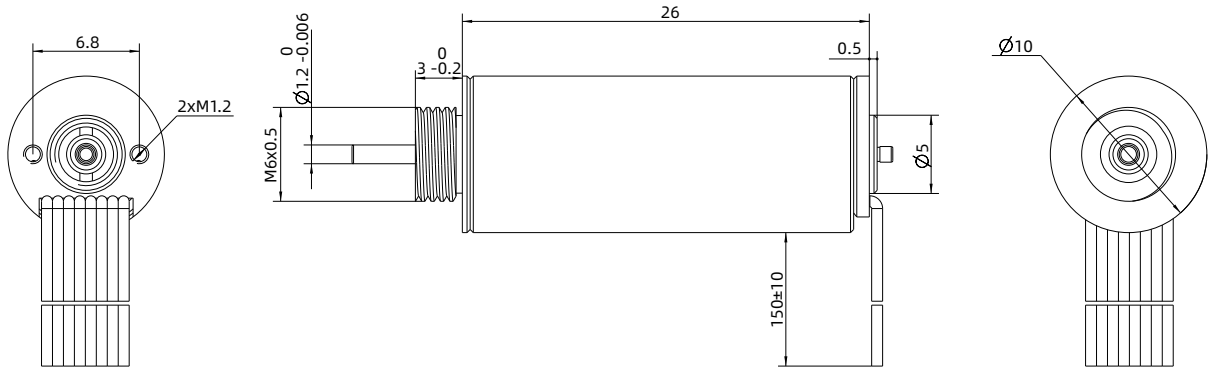

Torque Performance Curves

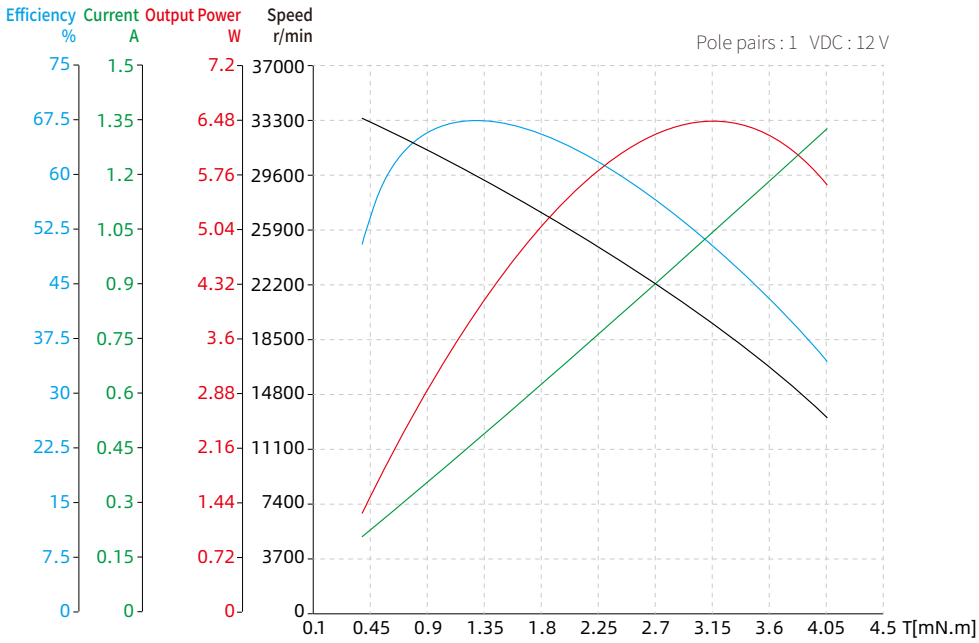

Note : All drawings are 1st-angle projection - ISO Compliant (3D models available)

12mm Series

Motor Characteristics

Motor part number	12ZWWC29	
Pole pairs	-	2
Terminal resistance, Phase-Phase	Ω	1
Terminal inductance, Phase-Phase	mH	0.033
Winding connection method	-	Star connection
Insulation class	-	B
Duty type	-	S2
Insulation strength (Withstand voltage)	-	660VAC/1KHz/1mA/1s
Insulation resistance	-	100MΩ/500VDC
Weight	g	16.5
Rated voltage	V	6
Rated power	W	5
Rated torque	mN·m	4
Rated speed	RPM	12000
Rated current	A	1.21
No load speed	RPM	15000
No load current	A	0.16
Motor efficiency	%	70
Noise (Ambient noise 20dB, test distance 1m)	dB	<50
Thermal resistance	K/W	12.49
Thermal time constant	S	300
Ambient temperature	°C	22.3
Max winding temperature	°C	86
Torque constant	mN·m/A	3.29
Back-EMF constant - peak value	V/Krpm	0.49
Back-EMF constant - effective value	V/Krpm	0.34
Peak torque	mN·m	19.76
Peak current	A	6
Rotor inertia	g·cm²	0.3
Mechanical time constant	ms	2.76
End bell	-	Aluminum alloy
Bearing	-	Deep groove ball bearing
Magnet	-	Sinter NdFeB
Rotation shaft	-	Carbon steel

For customized options, please contact DINGS' or your local distributor

Dimensional Drawings

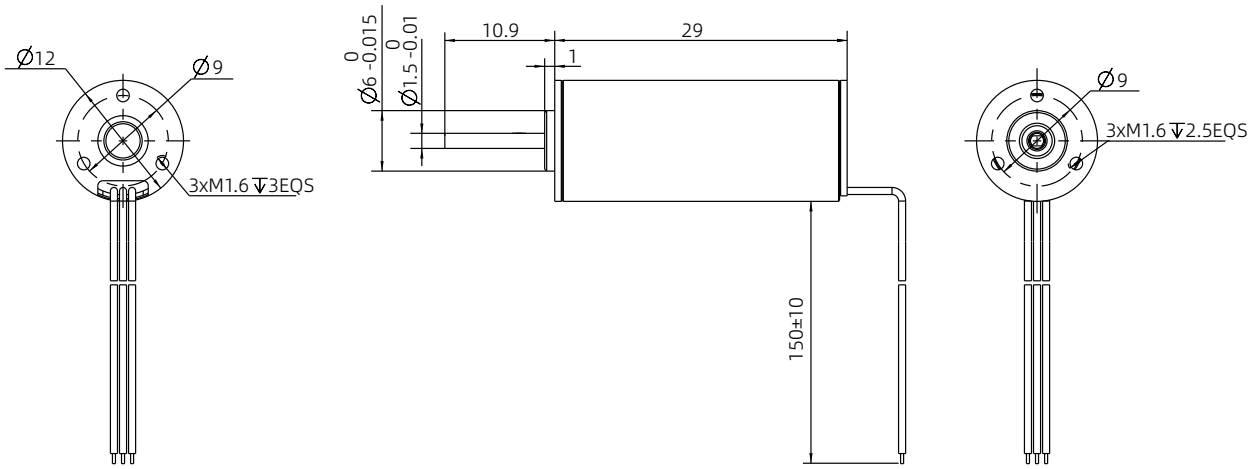

Torque Performance Curves

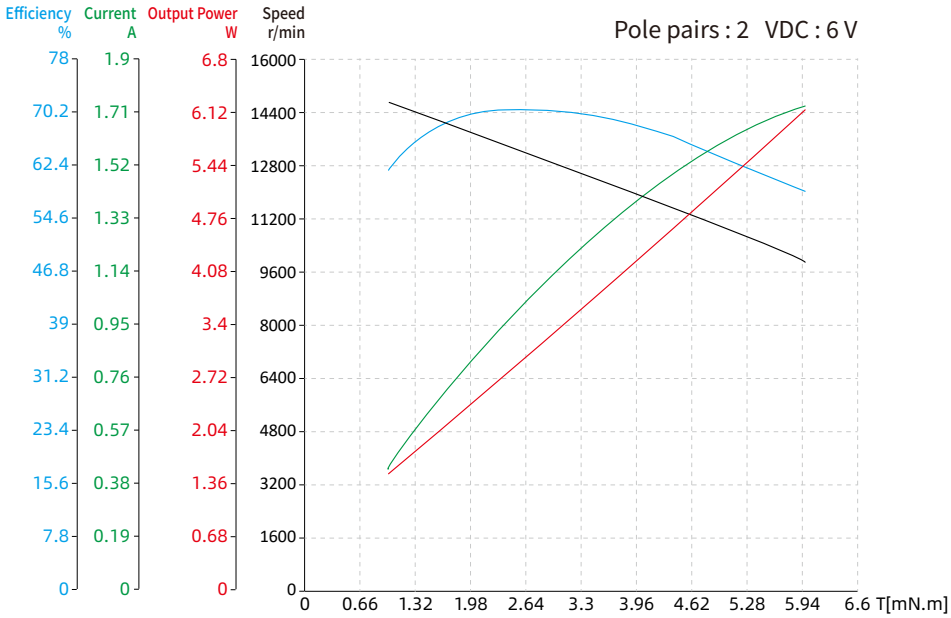

Note : All drawings are 1st-angle projection - ISO Compliant (3D models available)

13mm Series

Motor Characteristics

Motor part number	13ZWWC37	
Pole pairs	-	1
Terminal resistance, Phase-Phase	Ω	3.65
Terminal inductance, Phase-Phase	mH	0.113
Winding connection method	-	Delta connection
Insulation class	-	B
Duty type	-	S2
Feedback method	-	Hall sensor
Commutation angle	-	120°
Insulation strength (Withstand voltage)	-	300VAC/1KHz/1mA/1s
Insulation resistance	-	100MΩ/300VDC
Weight	g	28.6
Rated voltage	V	24
Rated power	W	11
Rated torque	mN·m	2.7
Rated speed	RPM	43500
Rated current	A	0.66
No load speed	RPM	46800
No load current	A	0.086
Motor efficiency	%	69
Noise (Ambient noise 20dB, test distance 1m)	dB	<50
Thermal resistance	K/W	20
Thermal time constant	S	315
Ambient temperature	°C	22.3
Max winding temperature	°C	80
Torque constant	mN·m/A	4.06
Back-EMF constant - peak value	V/Krpm	0.6
Back-EMF constant - effective value	V/Krpm	0.43
Peak torque	mN·m	26.73
Peak current	A	7
Rotor inertia	g·cm²	0.14
Mechanical time constant	ms	3.09
End bell	-	Stainless steel
Bearing	-	Deep groove ball bearing
Magnet	-	Sinter NdFeB
Rotation shaft	-	Carbon steel

For customized options, please contact DINGS' or your local distributor

13mm Series

Dimensional Drawings

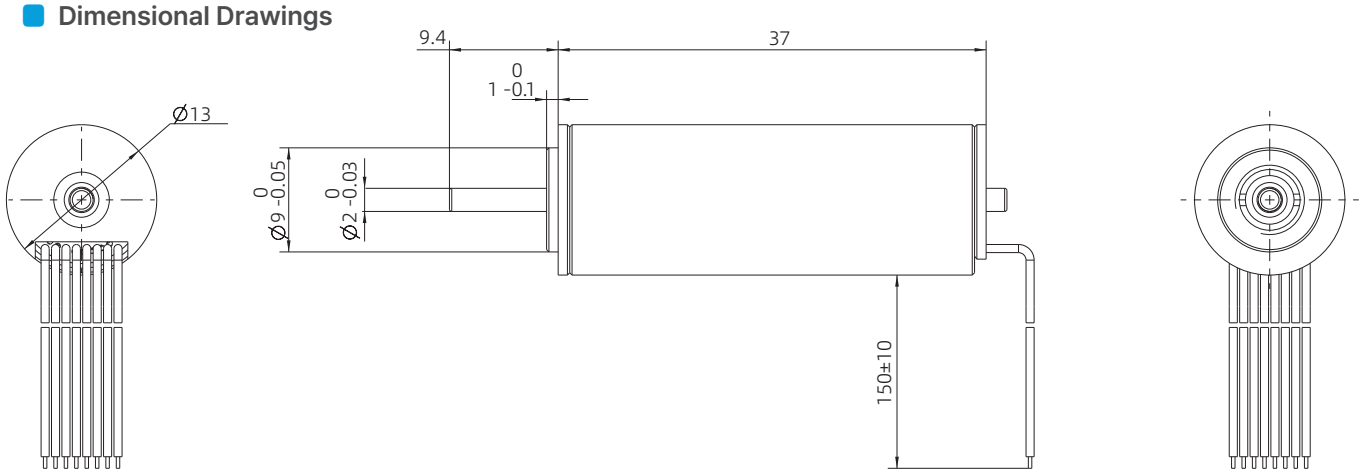

Torque Performance Curves

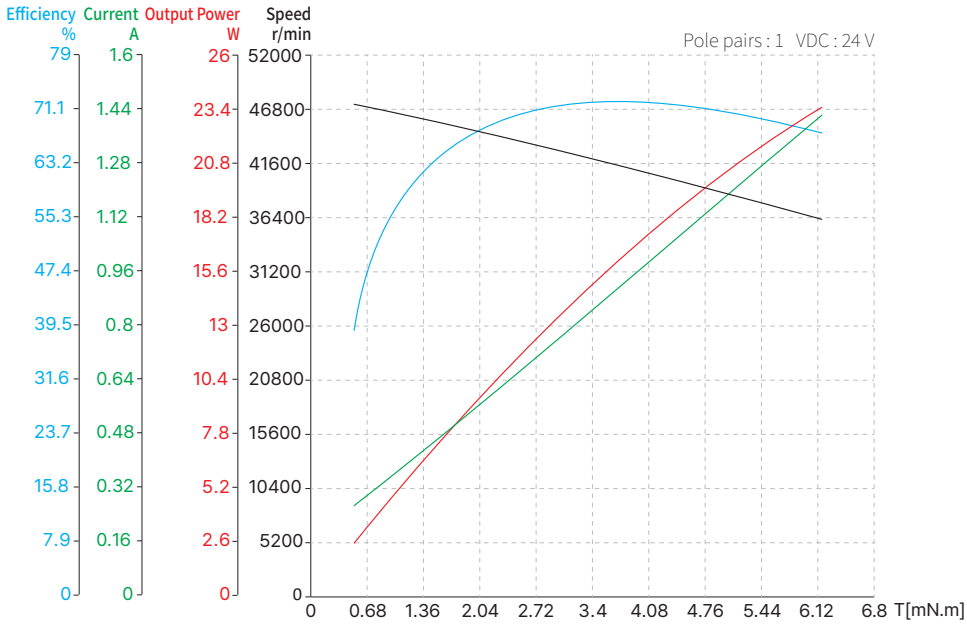

Note : All drawings are 1st-angle projection - ISO Compliant (3D models available)

14mm Series

Motor Characteristics

Motor part number	14ZWWC36	
Pole pairs	-	1
Terminal resistance, Phase-Phase	Ω	0.87
Terminal inductance, Phase-Phase	mH	0.04
Winding connection method	-	Delta connection
Insulation class	-	B
Duty type	-	S1
Feedback method	-	Hall sensor
Commutation angle	-	120°
Insulation strength (Withstand voltage)	-	500VAC/1KHz/1mA/1s
Insulation resistance	-	100MΩ/500VDC
Weight	g	34.2
Rated voltage	V	6
Rated power	W	5.1
Rated torque	mN·m	4
Rated speed	RPM	12000
Rated current	A	1.3
No load speed	RPM	15000
No load current	A	0.18
Motor efficiency	%	66
Noise (Ambient noise 20dB, test distance 1m)	dB	<50
Thermal resistance	K/W	20.6
Thermal time constant	S	400
Ambient temperature	°C	22.3
Max winding temperature	°C	70
Torque constant	mN·m/A	3.08
Back-EMF constant - peak value	V/Krpm	0.46
Back-EMF constant - effective value	V/Krpm	0.32
Peak torque	mN·m	20
Peak current	A	6
Rotor inertia	g·cm²	0.15
Mechanical time constant	ms	1.38
End bell	-	Stainless steel
Bearing	-	Deep groove ball bearing
Magnet	-	Sinter NdFeB
Rotation shaft	-	Carbon steel

For customized options, please contact DINGS' or your local distributor

14mm Series

Dimensional Drawings

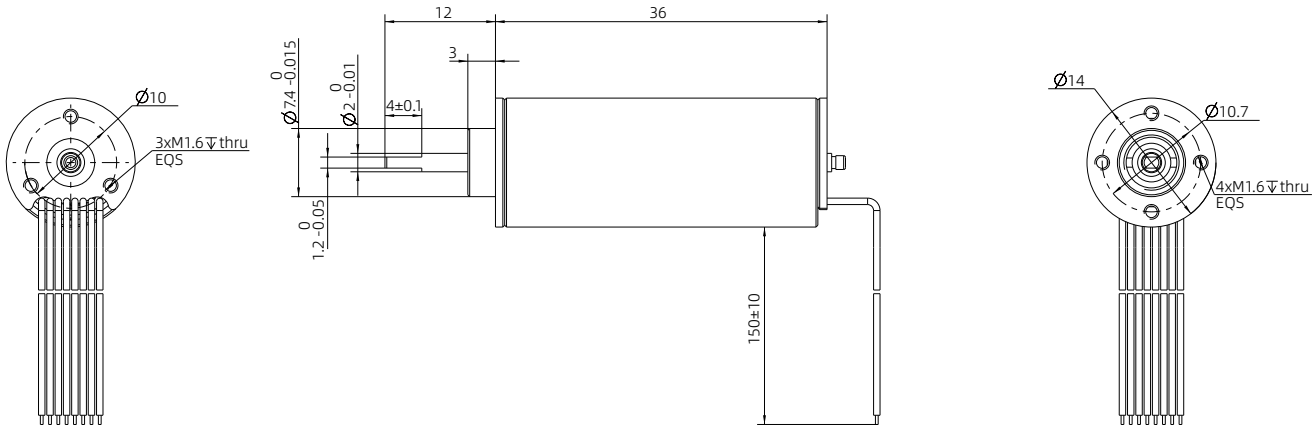

Torque Performance Curves

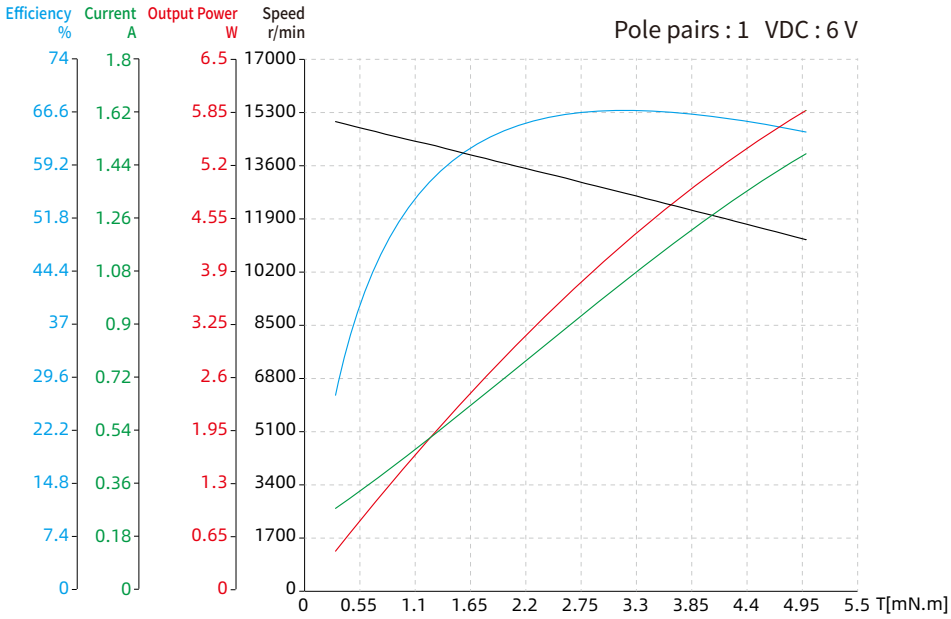

Note : All drawings are 1st-angle projection - ISO Compliant (3D models available)

16mm Series

Motor Characteristics

Motor part number		16ZWWC24	16ZWWC40					16ZWWC56
Pole pairs	-	1	1	1	1	1	1	1
Terminal resistance, Phase-Phase	Ω	2.408	0.63	1.31	1.85	3.15	0.3196	0.4971
Terminal inductance, Phase-Phase	mH	0.067	0.033	0.045	0.096	0.2	0.014	0.033
Winding connection method	-	Delta connection	Star connection	Star connection	Star connection	Star connection	Delta connection	Star connection
Insulation class	-	B	B	B	B	B	B	B
Duty type	-	S2	S2	S2	S2	S2	S2	S2
Feedback method	-	Hall sensor	Hall sensor	Hall sensor	Hall sensor	Hall sensor	Hall sensor	Hall sensor
Commutation angle	-	120°	120°	120°	120°	120°	120°	120°
Insulation strength (Withstand voltage)	-	500VAC/1KHz/1mA/1s						
Insulation resistance	-	100MΩ/500VDC						
Weight	g	26.5	47	47	47	47	47	63
Rated voltage	V	12	18	24	36	48	12	24
Rated power	W	10.8	33	39	39	39	27.26	73.5
Rated torque	mN·m	3.2	7.4	7.4	7.5	7.4	7.5	14.6
Rated speed	RPM	32300	44000	51300	50000	50000	34700	48100
Rated current	A	1.21	2.19	1.96	1.32	0.95	3	3.81
No load speed	RPM	44000	50000	58000	56000	56000	40000	54000
No load current	A	0.35	0.31	0.22	0.15	0.12	0.4	0.5
Motor efficiency	%	75.5	85	84	82.4	84.92	81.4	87.1
Noise (Ambient noise 20dB, test distance 1m)	dB	<50	<50	<50	<50	<50	<50	<50
Thermal resistance	K/W	17	16.7	16.7	16.7	16.7	16.7	13.8
Thermal time constant	S	1.62	1.79	1.79	1.79	1.79	1.79	4.23
Ambient temperature	°C	22.3	22.3	22.3	22.3	22.3	22.3	22.3
Max winding temperature	°C	100	100	100	100	100	100	100
Torque constant	mN·m/A	2.6	3.38	3.78	5.66	7.75	2.86	4.24
Back-EMF constant - peak value	V/Krpm	0.38	0.50	0.56	0.84	1.15	0.42	0.62
Back-EMF constant - effective value	V/Krpm	0.27	0.35	0.40	0.59	0.81	0.3	0.44
Peak torque	mN·m	9	96.65	69.21	110.19	118.13	53	140
Peak current	A	4.9	29	18	19	15	19	39
Rotor inertia	g·cm²	0.3	0.583	0.583	0.583	0.583	0.58	0.8
Mechanical time constant	ms	10.69	3.21	5.35	3.36	3.06	2.28	2.21
End bell	-	Stainless steel						
Bearing	-	Deep groove ball bearing						
Magnet	-	Sinter NdFeB						
Rotation shaft	-	Carbon steel						

For customized options, please contact DINGS' or your local distributor

16mm Series

Dimensional Drawings

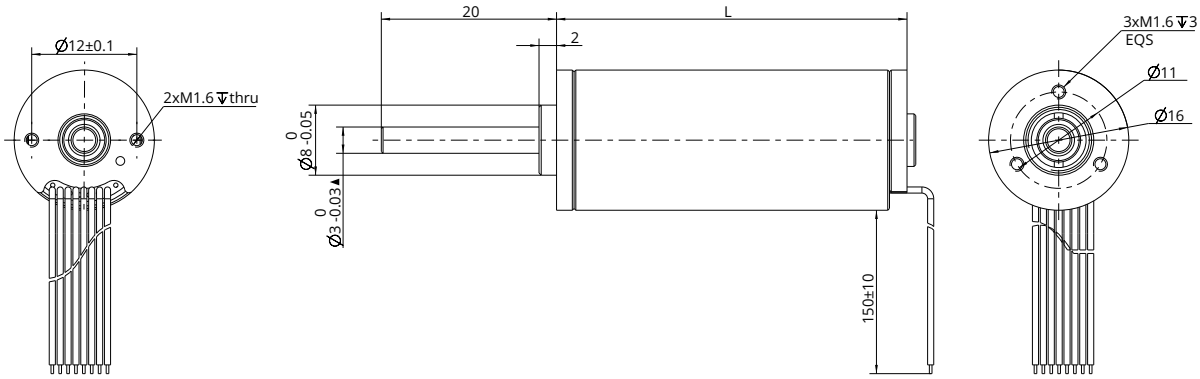

Torque Performance Curves

16ZWWC24

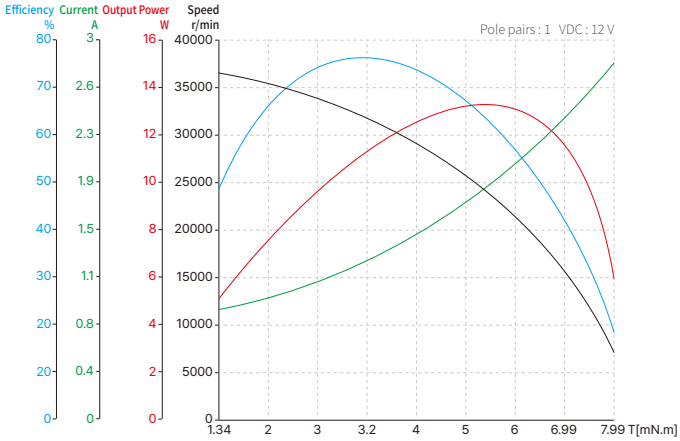

16ZWWC40

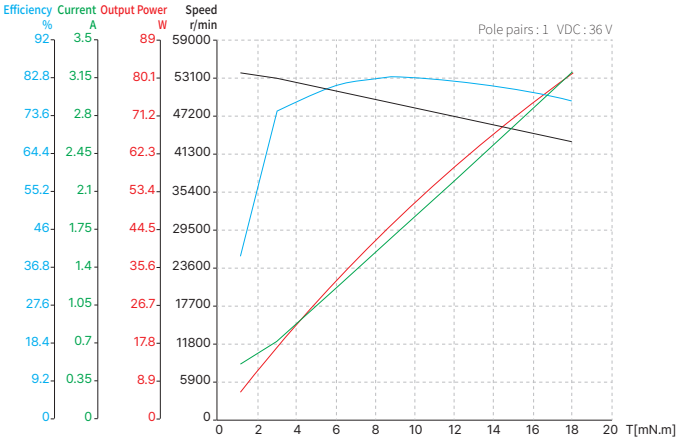

16ZWWC56

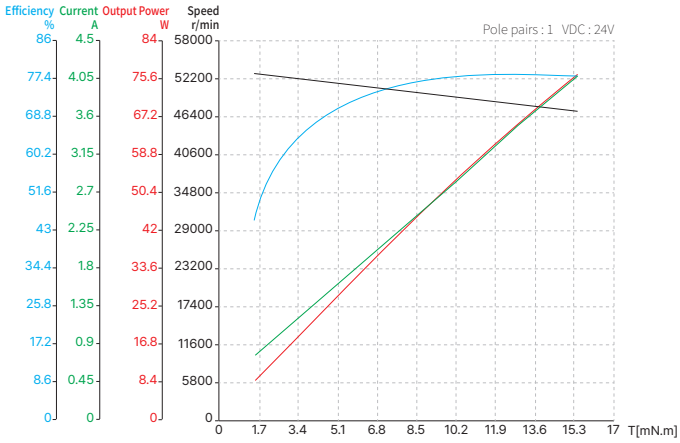

Note : All drawings are 1st-angle projection - ISO Compliant (3D models available)

22mm Series

Motor Characteristics

Motor part number		22ZWWC48					22ZWWC64
Pole pairs	-	1	1	1	1	2	1
Terminal resistance, Phase-Phase	Ω	0.26	0.3	0.57	1	0.94	0.63
Terminal inductance, Phase-Phase	mH	0.018	0.027	0.06	0.11	0.057	0.061
Winding connection method	-	Star connection	Star connection	Star connection	Star connection	Star connection	Star connection
Insulation class	-	B	B	B	B	B	B
Duty type	-	S2	S2	S2	S2	S1	S2
Feedback method	-	Hall sensor	Hall sensor	Hall sensor	Hall sensor	Hall sensor	Hall sensor
Commutation angle	-	120°	120°	120°	120°	120°	120°
Insulation strength (Withstand voltage)	-	500VAC/1KHz/1mA/1s					
Insulation resistance	-	100MΩ/ 500VDC					
Weight	g	110	110	110	110	110	140
Rated voltage	V	18	24	36	48	24	24
Rated power	W	83	100	100	100	53	38.24
Rated torque	mN·m	20	20	20	20	25	20
Rated speed	RPM	40000	49000	47400	49600	20100	18200
Rated current	A	7.95	4.68	3.12	2.29	3	1.86
No load speed	RPM	50000	55000	53000	54000	25700	19300
No load current	A	0.3	0.4	0.32	0.14	0.18	0.126
Motor efficiency	%	87	89	89	91	81	89.7
Noise (Ambient noise 20dB, test distance 1m)	dB	<50	<50	<50	<50	<50	< 50
Thermal resistance	K/W	12.6	11.9	11.5	12.8	12.2	9.8
Thermal time constant	S	648	648	648	648	620	1.86
Ambient temperature	°C	21.4	22	24.7	21.1	24	22.3
Max winding temperature	°C	155	155	155	155	82	100
Torque constant	mN·m/A	2.52	4.27	6.41	8.74	8.33	11.87
Back-EMF constant - peak value	V/Krpm	0.37	0.63	0.95	1.29	1.23	1.758
Back-EMF constant - effective value	V/Krpm	0.26	0.45	0.67	0.91	0.87	1.24
Peak torque	mN·m	116.11	341.76	404.72	419.33	212.77	320
Peak current	A	46	80	63	48	26	33.5
Rotor inertia	g·cm²	1.15	1.15	1.15	1.15	1.15	3
Mechanical time constant	ms	4.72	1.89	1.60	1.51	1.56	1.34
End bell	-	Stainless steel					
Bearing	-	Deep groove ball bearing					
Magnet	-	Sinter NdFeB					
Rotation shaft	-	Carbon steel					

For customized options, please contact DINGS' or your local distributor

Dimensional Drawings

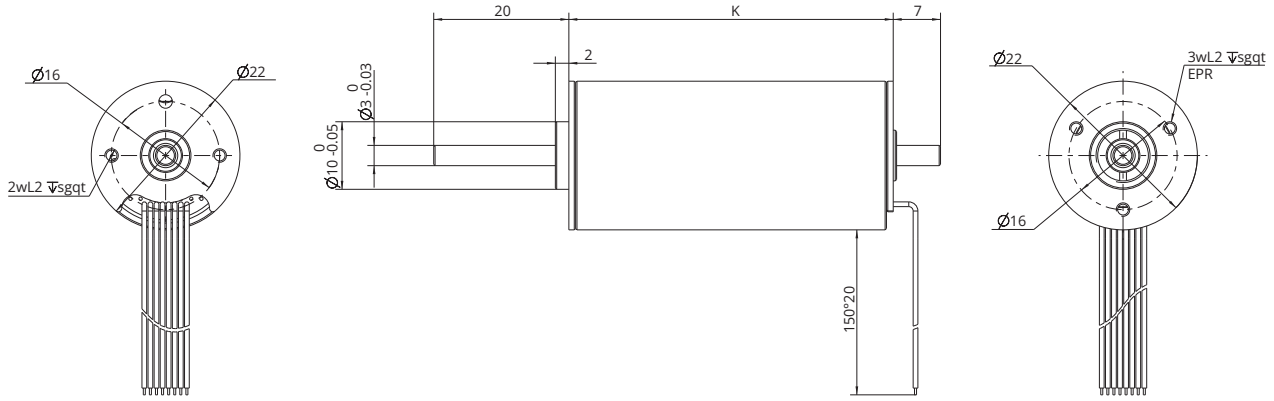

Torque Performance Curves

- **22ZWWC48**

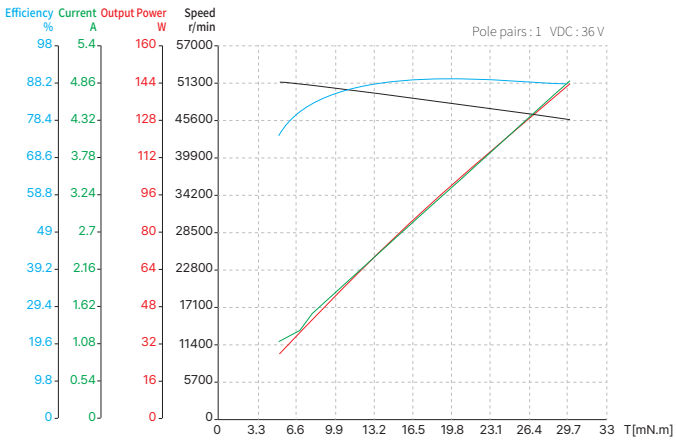

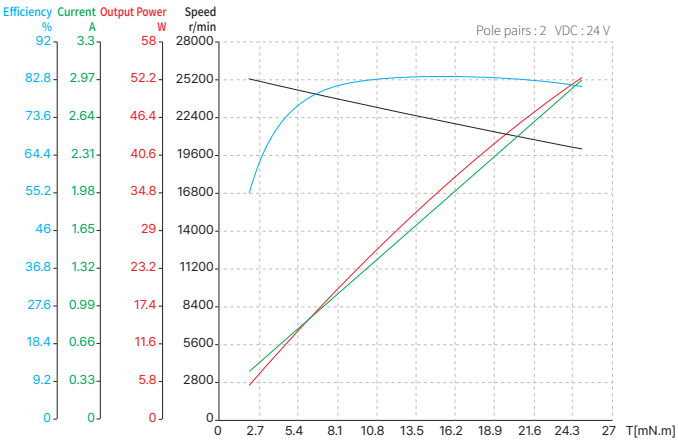

- **22ZWWC64**

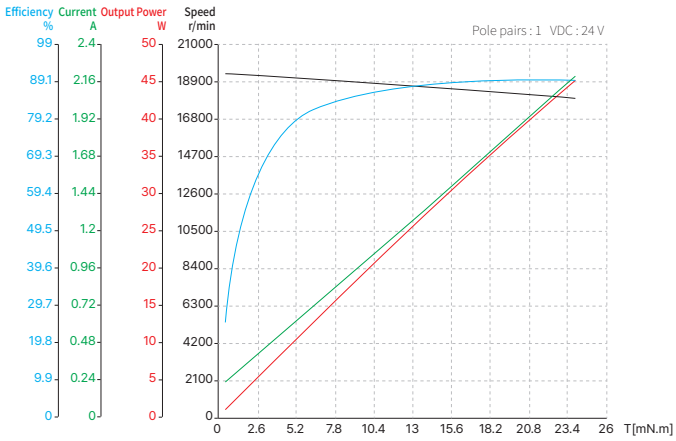

Note : All drawings are 1st-angle projection - ISO Compliant (3D models available)

28mm Series

Motor Characteristics

Motor part number	28ZWWC52					
Pole pairs	-	1	1	1	1	2
Terminal resistance, Phase-Phase	Ω	0.52	1.7	4.3	6.6	1.6
Terminal inductance, Phase-Phase	mH	0.0495	0.178	0.42	0.77	0.13
Winding connection method	-	Star connection	Star connection	Star connection	Star connection	Star connection
Insulation class	-	B	B	B	B	B
Duty type	-	S2	S2	S2	S2	S1
Feedback method	-	Hall sensors	Hall sensors	Hall sensors	Hall sensors	Hall sensors
Commutation angle	-	120°	120°	120°	120°	120°
Insulation strength (Withstand voltage)	-	500VAC/1KHz/1mA/1s				
Insulation resistance	-	100MΩ/500VDC				
Weight	g	170	170	170	170	170
Rated voltage	V	12	24	36	48	24
Rated power	W	30	34	35	35	37
Rated torque	mN·m	32	32	32	34	50
Rated speed	RPM	6970	8430	8370	8340	7000
Rated current	A	3.13	1.69	1.17	0.86	2.00
No load speed	RPM	9270	9680	9500	9400	8500
No load current	A	0.2	0.11	0.084	0.061	0.12
Motor efficiency	%	80	84	83	85	81.5
Noise (Ambient noise 20dB, test distance 1m)	dB	<50	<50	<50	<50	<50
Thermal resistance	K/W	8.9	8.2	8.17	7.76	8.96
Thermal time constant	S	1200	1200	1080	1100	1000
Ambient temperature	°C	24	24	24	24	21.2
Max winding temperature	°C	80	80	80	80	46.7
Torque constant	mN·m/A	10.24	18.97	27.32	39.63	25
Back-EMF constant - peak value	V/Krpm	1.52	2.81	4.04	5.87	3.70
Back-EMF constant - effective value	V/Krpm	1.07	1.99	2.86	4.15	2.62
Peak torque	mN·m	236.31	267.87	228.72	288.25	375
Peak current	A	23	14	8	7	15
Rotor inertia	g·cm²	10.2	10.2	10.2	10.2	10.2
Mechanical time constant	ms	5.06	4.82	5.88	4.29	2.61
End bell	-	Stainless steel				
Bearing	-	Deep groove ball bearing				
Magnet	-	Sinter NdFeB				
Rotation shaft	-	Carbon steel				

For customized options, please contact DINGS' or your local distributor

28mm Series

Dimensional Drawings

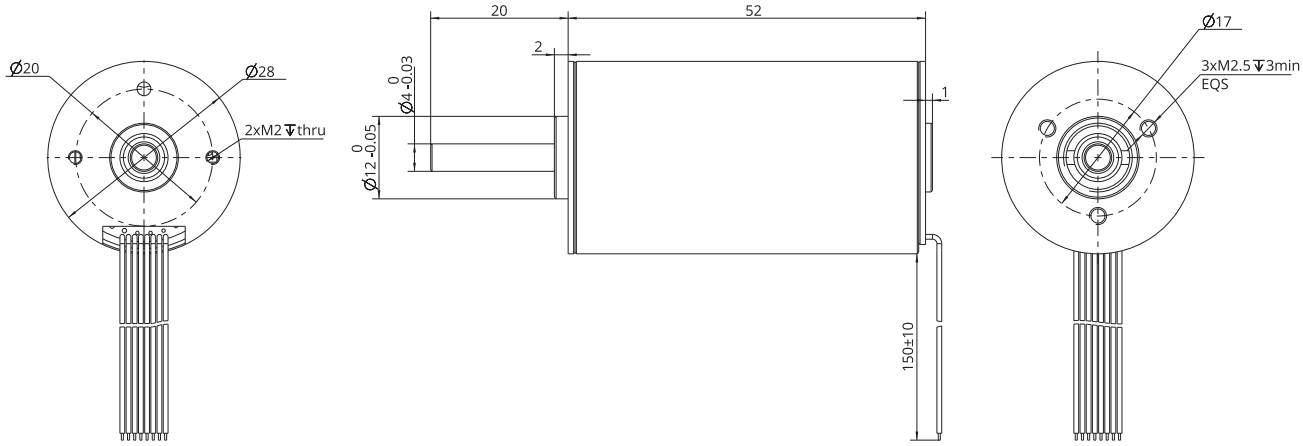

Torque Performance Curves

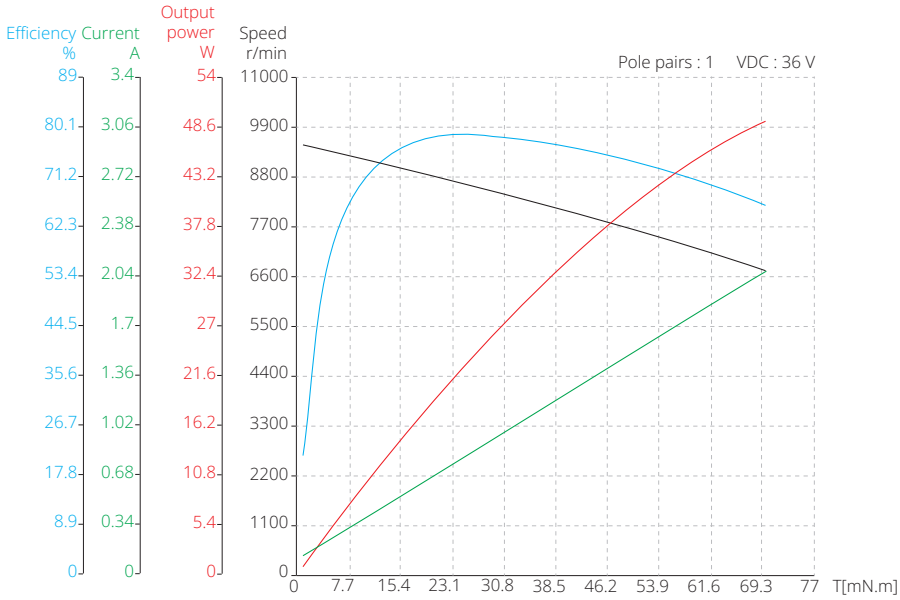

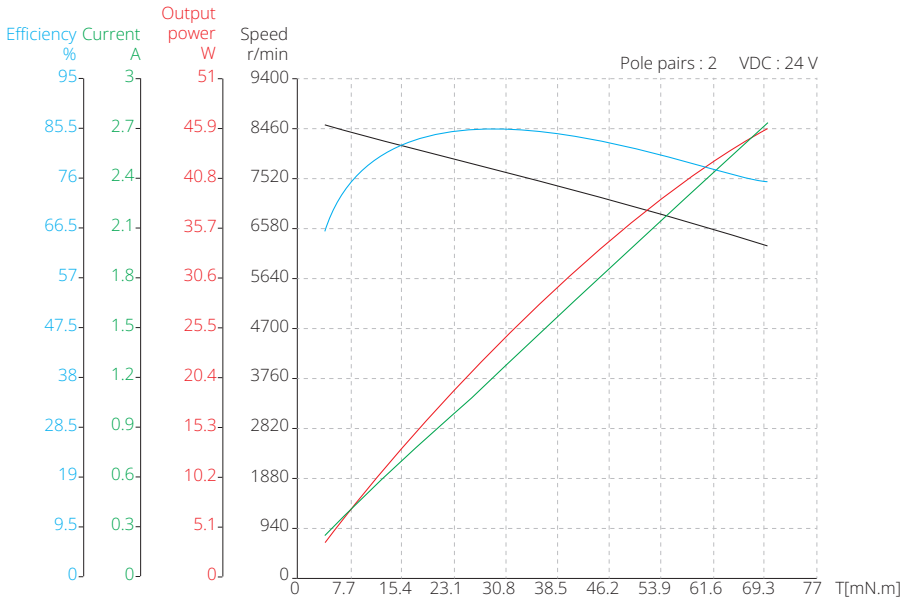

Note : All drawings are 1st-angle projection - ISO Compliant (3D models available)

30mm Series

Motor Characteristics

Motor part number	30ZWWC65	
Pole pairs	-	2
Terminal resistance, Phase-Phase	Ω	0.5
Terminal inductance, Phase-Phase	mH	0.05
Winding connection method	-	Star connection
Insulation class	-	B
Duty type	-	S1
Feedback method	-	Hall sensors
Commutation angle	-	120°
Insulation strength (Withstand voltage)	-	500VAC/1KHz/1mA/1s
Insulation resistance	-	100MΩ/500VDC
Weight	g	230
Rated voltage	V	24
Rated power	W	65
Rated torque	mN·m	90
Rated speed	RPM	6900
Rated current	A	3.85
No load speed	RPM	9200
No load current	A	0.3
Motor efficiency	%	86
Noise (Ambient noise 20dB, test distance 1m)	dB	<50
Thermal resistance	K/W	7.4
Thermal time constant	S	1000
Ambient temperature	°C	20
Max winding temperature	°C	55
Torque constant	mN·m/A	23.38
Back-EMF constant - peak value	V/Krpm	3.46
Back-EMF constant - effective value	V/Krpm	2.45
Peak torque	mN·m	1122.08
Peak current	A	48
Rotor inertia	g·cm²	28
Mechanical time constant	ms	2.56
End bell	-	Stainless steel
Bearing	-	Deep groove ball bearing
Magnet	-	Sinter NdFeB
Rotation shaft	-	Carbon steel

For customized options, please contact DINGS' or your local distributor

Dimensional Drawings

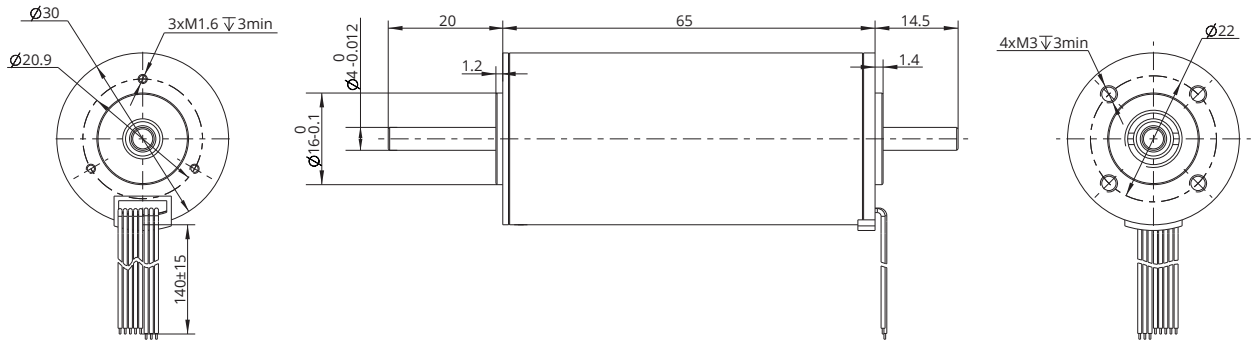

Torque Performance Curves

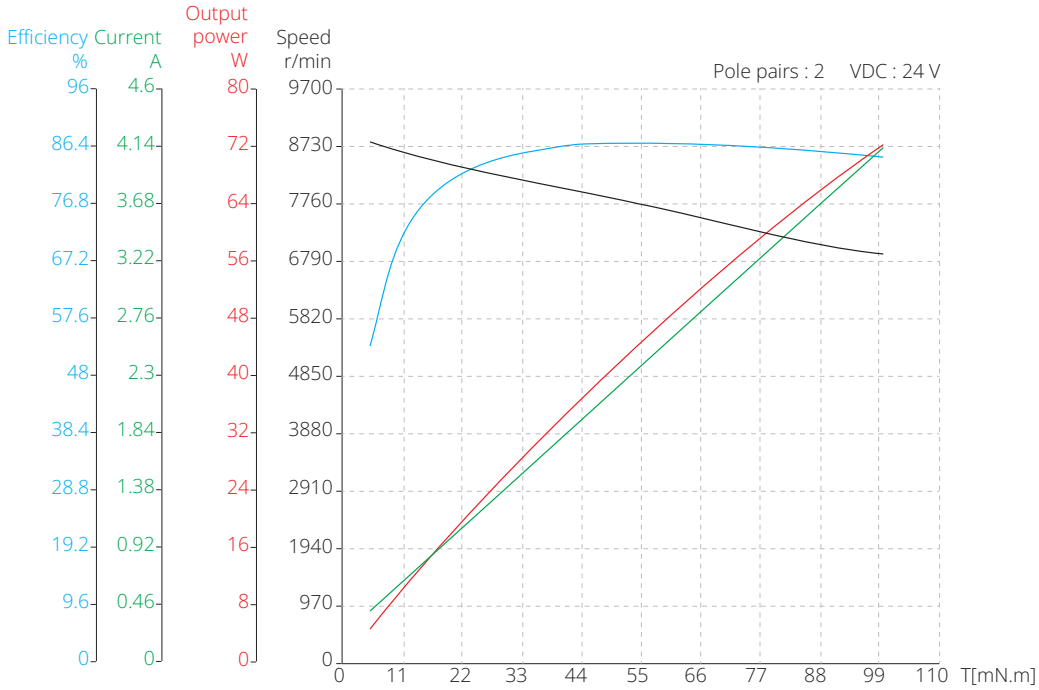

Note : All drawings are 1st-angle projection - ISO Compliant (3D models available)

36mm Series

Motor Characteristics

Motor part number	36ZWWC60					
Pole pairs	-	1	1	1	1	2
Terminal resistance, Phase-Phase	Ω	0.6	0.68	1.45	2.1	0.41
Terminal inductance, Phase-Phase	mH	0.08	0.1	0.19	0.27	0.042
Winding connection method	-	Star connection	Star connection	Star connection	Star connection	Star connection
Insulation class	-	B	B	B	B	B
Duty type	-	S2	S2	S2	S2	S1
Feedback method	-	Hall sensors	Hall sensors	Hall sensors	Hall sensors	Hall sensors
Commutation angle	-	120°	120°	120°	120°	120°
Insulation strength (Withstand voltage)	-	500VAC/1KHz/1mA/1s				
Insulation resistance	-	100MΩ/500VDC				
Weight	g	270	270	270	270	270
Rated voltage	V	18	24	36	48	24
Rated power	W	68	69	74	85	85
Rated torque	mN·m	70	70	70	70	100
Rated speed	RPM	7340	9345	10000	11700	8100
Rated current	A	4.97	3.78	2.59	2.21	4.80
No load speed	RPM	10000	11000	11500	13000	10300
No load current	A	0.37	0.37	0.22	0.2	0.36
Motor efficiency	%	76	76	79.5	80	84.4
Noise (Ambient noise 20dB, test distance 1m)	dB	<50	<50	<50	<50	<50
Thermal resistance	K/W	7.4	7.46	7.53	7.23	7.48
Thermal time constant	S	1350	1350	1700	1080	1330
Ambient temperature	°C	21.1	23.1	20.1	20.4	19.5
Max winding temperature	°C	90	90	90	90	69.3
Torque constant	mN·m/A	14.08	18.50	27.07	31.62	20.83
Back-EMF constant - peak value	V/Krpm	2.09	2.74	4.01	4.68	3.08
Back-EMF constant - effective value	V/Krpm	1.47	1.94	2.83	3.31	2.18
Peak torque	mN·m	422.47	653.09	672.16	722.82	1219.51
Peak current	A	30	35	25	23	59
Rotor inertia	g·cm²	39	39	39	39	39
Mechanical time constant	ms	11.80	7.75	7.72	8.19	3.68
End bell	-	Stainless steel				
Bearing	-	Deep groove ball bearing				
Magnet	-	Sinter NdFeB				
Rotation shaft	-	Carbon steel				

For customized options, please contact DINGS' or your local distributor

36mm Series

Dimensional Drawings

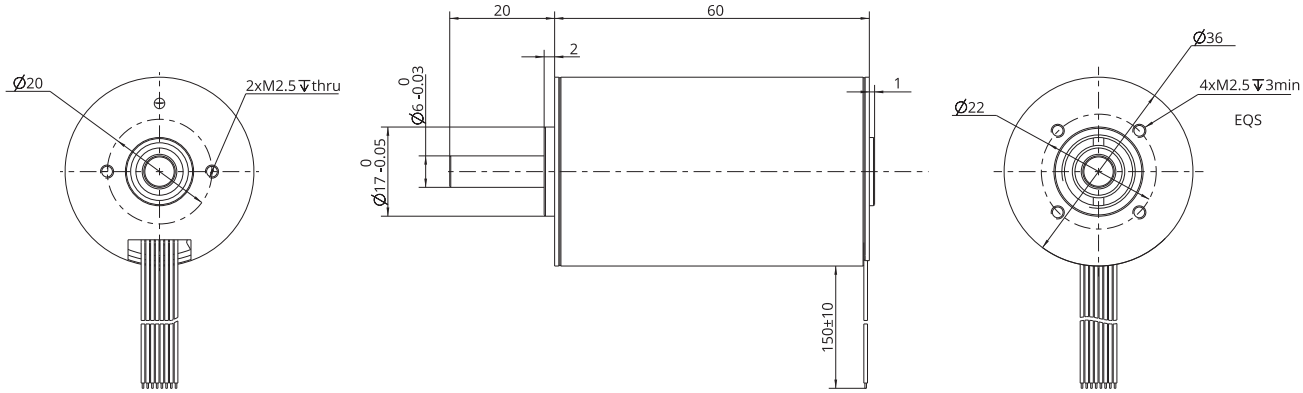

Torque Performance Curves

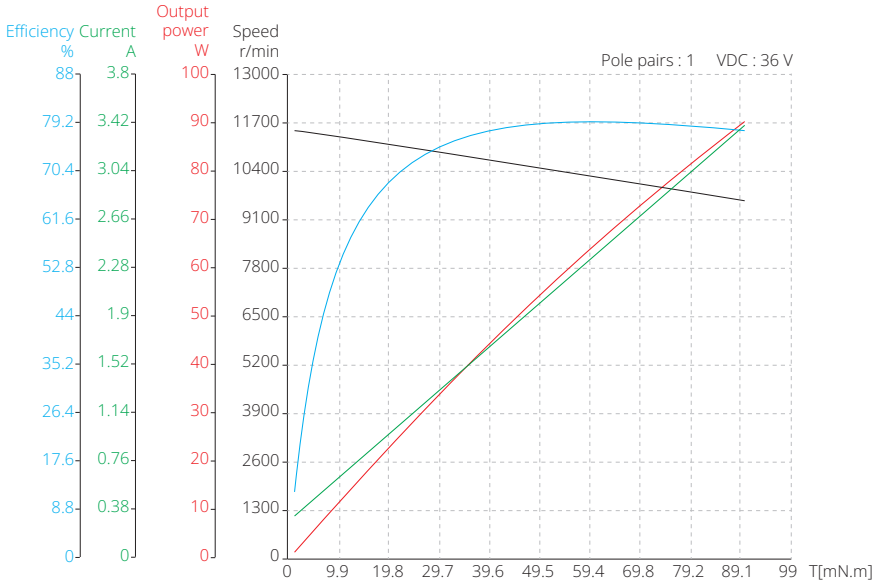

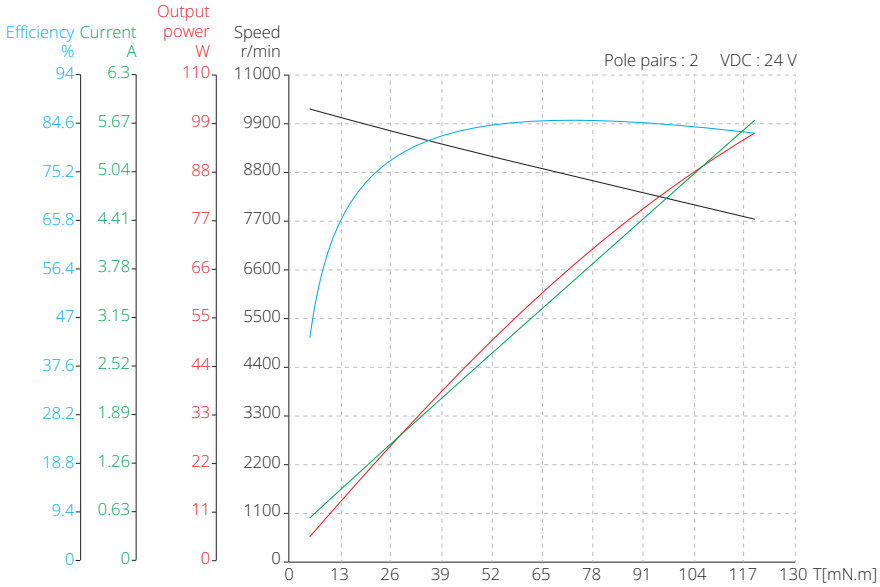

Note : All drawings are 1st-angle projection - ISO Compliant (3D models available)

42mm Series

Motor Characteristics

Motor part number	42ZWWC80					
Pole pairs	-	1	1	1	1	2
Terminal resistance, Phase-Phase	Ω	0.4	0.45	0.6	0.95	0.22
Terminal inductance, Phase-Phase	mH	0.085	0.14	0.14	0.23	0.035
Winding connection method	-	Star connection	Star connection	Star connection	Star connection	Star connection
Insulation class	-	B	B	B	B	B
Duty type	-	S2	S2	S2	S2	S1
Feedback method	-	Hall sensors	Hall sensors	Hall sensors	Hall sensors	Hall sensors
Commutation angle	-	120°	120°	120°	120°	120°
Insulation strength (Withstand voltage)	-	500VAC/1KHz/1mA/1s				
Insulation resistance	-	100MΩ/500VDC				
Weight	g	500	500	500	500	500
Rated voltage	V	18	24	36	48	24
Rated power	W	66	80	100	160	102
Rated torque	mN·m	90	90	90	120	180
Rated speed	RPM	6678	8346	11619	12200	5400
Rated current	A	4.89	4.17	3.47	4.17	5.70
No load speed	RPM	9000	11000	13000	13800	6800
No load current	A	0.6	0.69	0.6	0.58	0.42
Motor efficiency	%	75	80	80	80	87.9
Noise (Ambient noise 20dB, test distance 1m)	dB	<50	<50	<50	<50	<50
Thermal resistance	K/W	4.11	4.79	5.44	5.32	4.7
Thermal time constant	S	1240	1620	2040	2040	1340
Ambient temperature	°C	23.1	23.5	23	23	22.6
Max winding temperature	°C	51.5	63.7	80	80	72.1
Torque constant	mN·m/A	18.41	21.60	25.92	28.80	31.58
Back-EMF constant - peak value	V/Krpm	2.73	3.20	3.84	4.26	4.68
Back-EMF constant - effective value	V/Krpm	1.93	2.26	2.71	3.02	3.31
Peak torque	mN·m	828.41	1152.00	1555.20	1455.16	3444.98
Peak current	A	45	53	60	51	109
Rotor inertia	g·cm²	96.3	96.3	96.3	96.3	96.3
Mechanical time constant	ms	11.37	9.29	8.60	11.03	2.12
End bell	-	Stainless steel				
Bearing	-	Deep groove ball bearing				
Magnet	-	Sinter NdFeB				
Rotation shaft	-	Carbon steel				

For customized options, please contact DINGS' or your local distributor

42mm Series

Dimensional Drawings

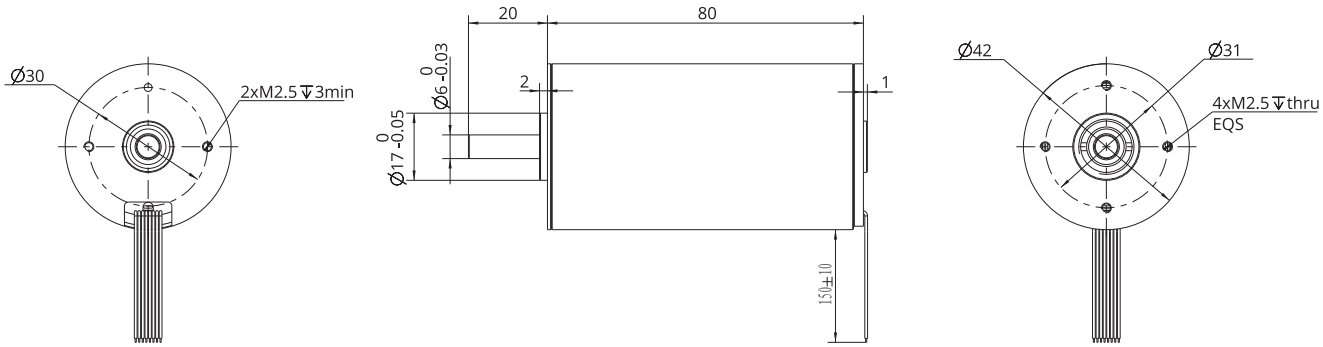

Torque Performance Curves

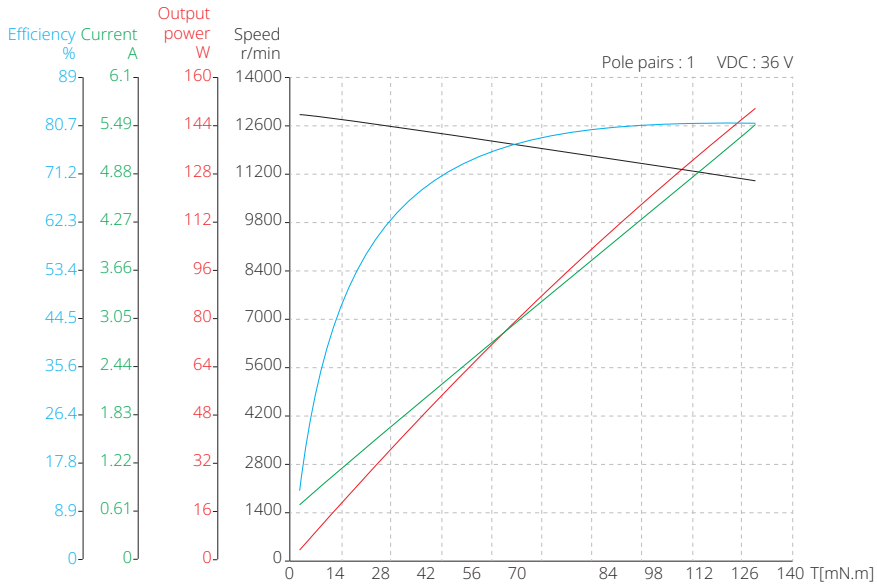

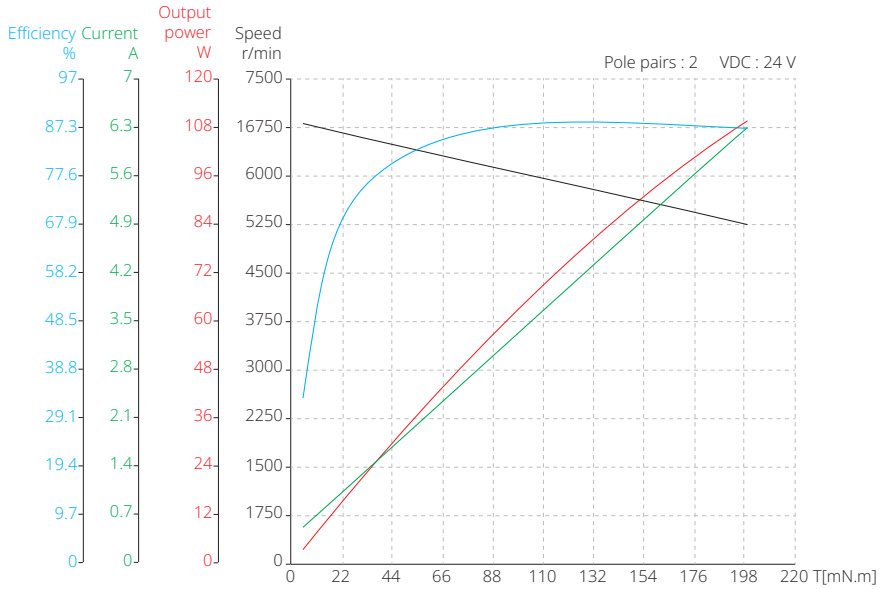

Note : All drawings are 1st-angle projection - ISO Compliant (3D models available)

Accerrosies and Options

Precision planetary gearbox

- 6PGX

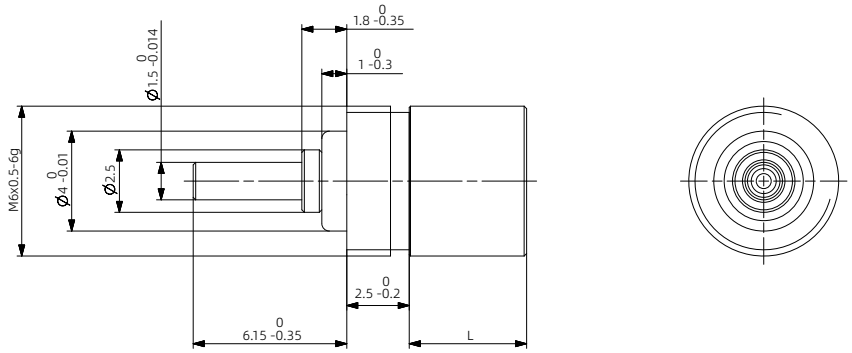

Stage	-	Stage 1	Stage 2	Stage 3
Gear ratio	X : 1	3.9	15	57
Max. backlash	°	1.8	2.0	2.2
Max. continuous output power	W	0.65	0.4	0.2
Max. peak output power	W	0.8	0.5	0.25
Max. continuous input speed	rpm	20000	20000	20000
Max. peak input speed	rpm	25000	25000	25000
Max. continuous torque	N·m	0.002	0.005	0.01
Max. peak torque	N·m	0.005	0.01	0.02
Max. efficiency	%	88	77	68
Weight	g	1.6	2	2.4
Gearbox length L	mm	4.7	7.2	9.7

- 8PGX

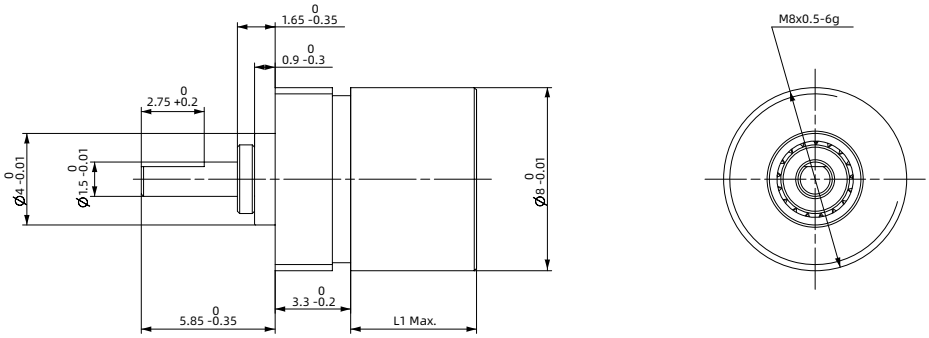

Stage	-	Stage 1	Stage 2	Stage 3
Gear ratio	X : 1	4	16	64
Max. backlash	°	1.8	2.0	2.2
Max. continuous output power	W	0.84	0.52	0.4
Max. peak output power	W	1.05	0.65	0.5
Max. continuous input speed	rpm	14000	14000	14000
Max. peak input speed	rpm	20000	20000	20000
Max. continuous torque	N·m	0.01	0.02	0.06
Max. peak torque	N·m	0.015	0.03	0.09
Max. efficiency	%	90	81	72
Weight	g	2.6	3.2	3.8
Gearbox length L	mm	5.5	8.1	10.7

Accerrosies and Options

- **10PGX**

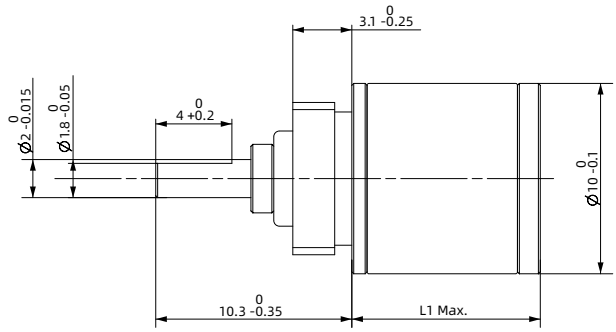

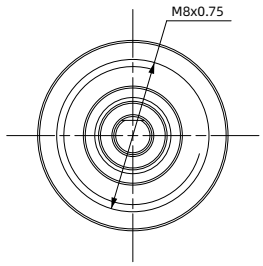

Stage	-	Stage 1	Stage 2	Stage 3	Stage 4
Gear ratio	X : 1	4.25	18	77	326
Max. backlash	°	1.5	1.8	2.0	2.2
Max. continuous output power	W	1.6	1.2	1.0	0.4
Max. peak output power	W	2	1.5	1.3	0.5
Max. continuous input speed	rpm	14000	14000	14000	14000
Max. peak input speed	rpm	18000	18000	18000	18000
Max. continuous torque	N·m	0.01	0.03	0.10	0.15
Max. peak torque	N·m	0.02	0.05	0.15	0.2
Max. efficiency	%	90	81	73	65
Weight	g	6.8	7.3	7.8	8.3
Gearbox length L	mm	10.1	13.6	17.1	20.6

- **12PGX**

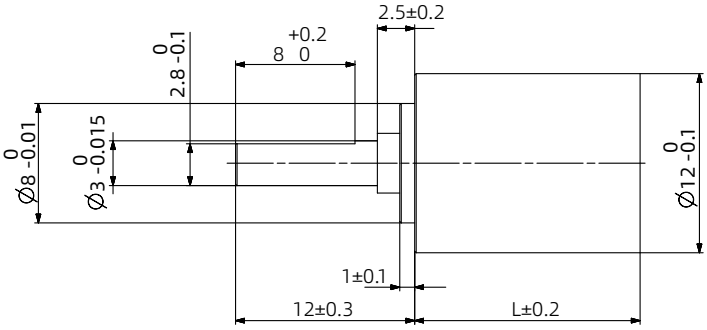

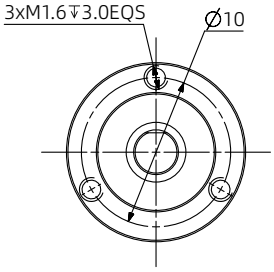

Stage	-	Stage 1	Stage 2	Stage 3	Stage 4
Gear ratio	X : 1	4.3	18.4	79	337
Max. backlash	°	1.2	1.5	1.8	2.1
Max. continuous output power	W	2.0	1	0.5	0.25
Max. peak output power	W	2.5	1.25	0.65	0.3
Max. continuous input speed	rpm	16000	16000	16000	16000
Max. peak input speed	rpm	20000	20000	20000	20000
Max. continuous torque	N·m	0.08	0.11	0.14	0.17
Max. peak torque	N·m	0.1	0.14	0.18	0.21
Max. efficiency	%	90	80	75	65
Weight	g	9	12	15	18
Gearbox length L	mm	11.3	15.1	18.9	22.7

Accerrosies and Options

- **14PGX**

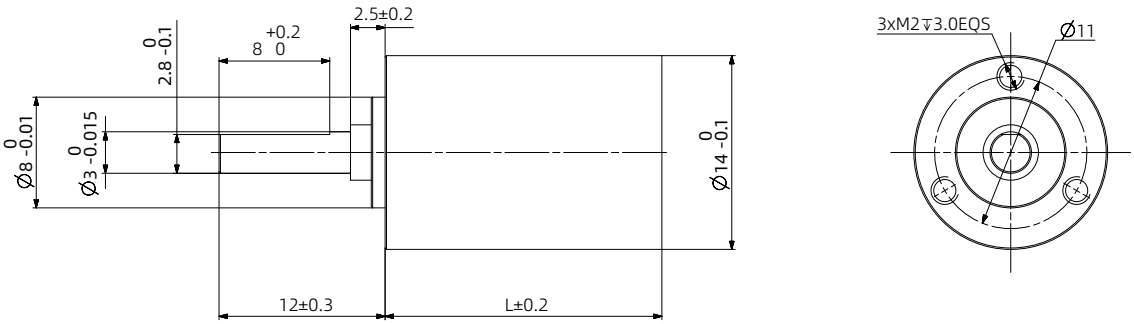

Stage	-	Stage 1	Stage 2	Stage 3	Stage 4
Gear ratio	X : 1	4.3	18.4	79	337
Max. backlash	°	1.1	1.3	1.45	1.7
Max. continuous output power	W	4.0	2.0	1.0	0.4
Max. peak output power	W	5.0	2.5	1.25	0.5
Max. continuous input speed	rpm	14000	16000	16000	16000
Max. peak input speed	rpm	18000	20000	20000	20000
Max. continuous torque	N·m	0.16	0.2	0.25	0.3
Max. peak torque	N·m	0.2	0.25	0.31	0.38
Max. efficiency	%	90	80	75	65
Weight	g	11	15	19	23
Gearbox length L	mm	11.8	16.1	20.4	24.7

- **16PGX**

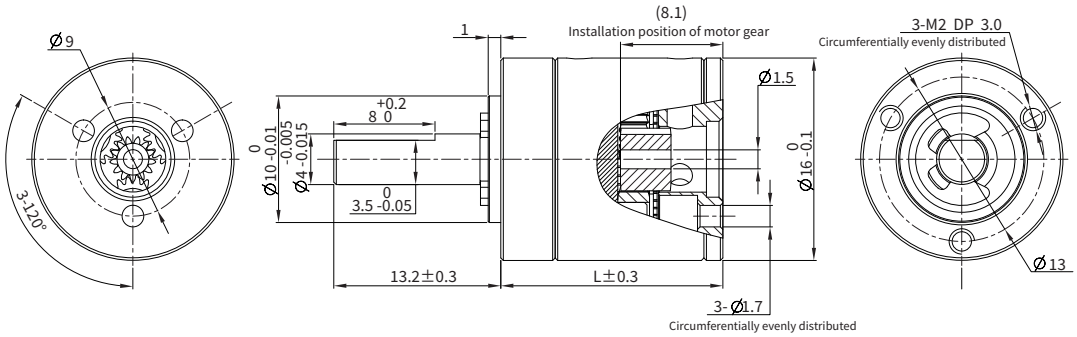

Stage	-	Stage 1	Stage 2	Stage 3	Stage 4
Gear ratio	X : 1	3.9, 5.3	16, 21, 28	62, 83, 111, 150	243, 326, 439, 590, 794
Max. backlash	°	1.0	1.2	1.3	1.4
Max. continuous output power	W	6.5	3.2	1.6	0.6
Max. peak output power	W	8.0	4.0	2.0	0.75
Max. continuous input speed	rpm	12000	14000	14000	14000
Max. peak input speed	rpm	15000	18000	18000	18000
Max. continuous torque	N·m	0.2	0.25	0.35	0.45
Max. peak torque	N·m	0.25	0.35	0.45	0.55
Max. efficiency	%	90	80	75	65
Weight	g	25	31	37	42
Gearbox length L	mm	18.7	25.5	30.2	35

Accerrosies and Options

22PGX

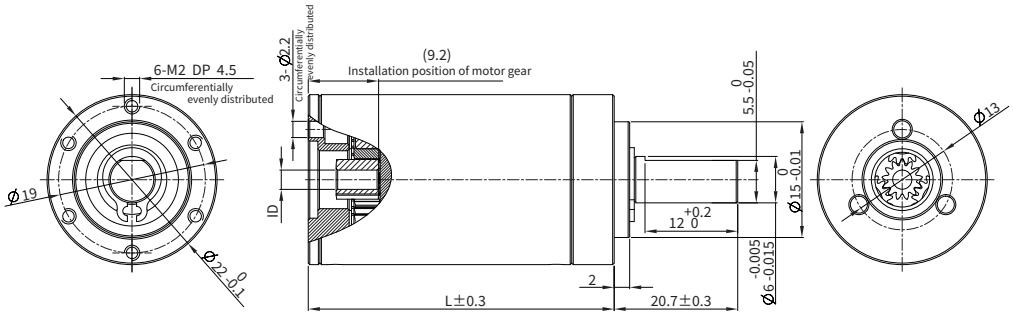

Stage	-	Stage 1	Stage 2	Stage 3	Stage 4
Gear ratio	X : 1	3.9, 5.3	16, 21, 28	62, 83, 111, 150	243, 326, 439, 590, 794
Max. backlash	°	0.85	1.05	1.2	1.35
Max. continuous output power	W	24	12	6.0	1.6
Max. peak output power	W	30	15	7.5	2.0
Max. continuous input speed	rpm	8000	10000	10000	10000
Max. peak input speed	rpm	10000	12500	12500	12500
Max. continuous torque	N·m	0.5	0.7	1.2	1.5
Max. peak torque	N·m	0.6	0.9	1.5	1.9
Max. efficiency	%	90	81	74	66
Weight	g	59	83	97	112
Gearbox length L	mm	22.3	33	39.6	46.3

28PGX

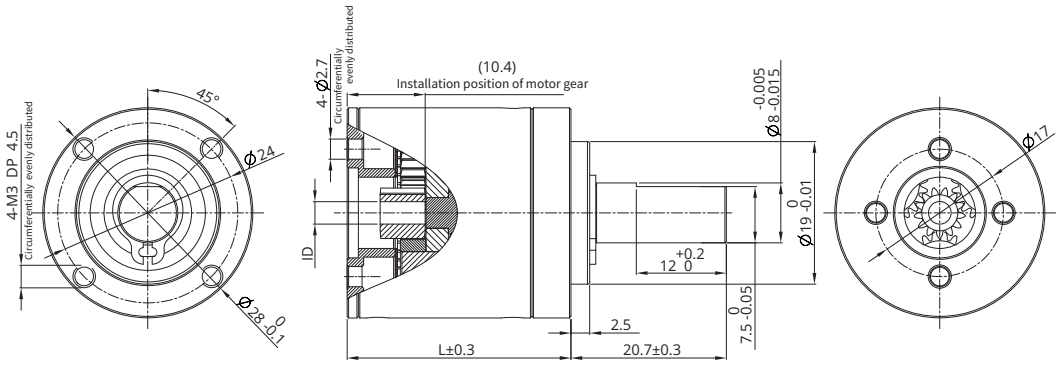

Stage	-	Stage 1	Stage 2	Stage 3	Stage 4
Gear ratio	X : 1	3.9, 5.3	16, 21, 28	62, 83, 111, 150	243, 326, 439, 590, 794
Max. backlash	°	0.5	0.6	0.7	0.75
Max. continuous output power	W	100	50	25	8.0
Max. peak output power	W	125	62	31	10
Max. continuous input speed	rpm	6000	7000	7000	7000
Max. peak input speed	rpm	7500	8750	8750	8750
Max. continuous torque	N·m	1.25	2.9	5.0	5.0
Max. peak torque	N·m	1.6	3.6	6.3	6.3
Max. efficiency	%	90	81	72	65
Weight	g	103	150	174	198
Gearbox length L	mm	24.2	36.9	43.5	50.2

Accerrosies and Options

36PGX

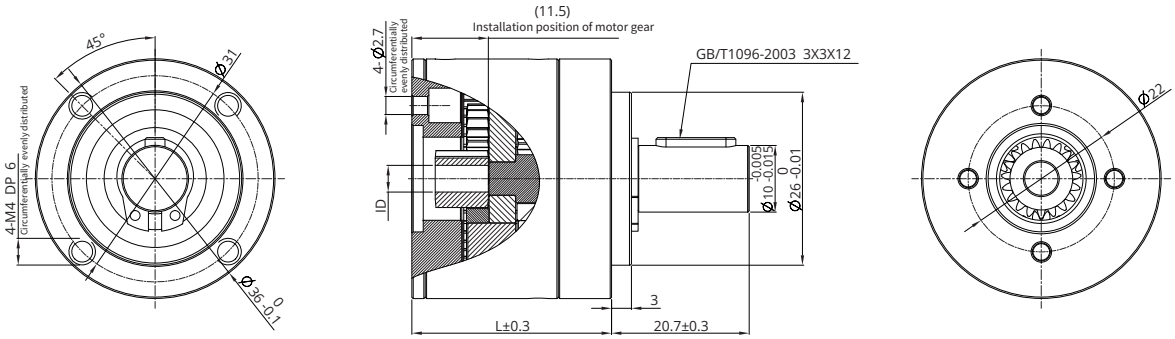

Stage	-	Stage 1	Stage 2	Stage 3	Stage 4
Gear ratio	X : 1	3.9, 5.3	16, 21, 28	62, 83, 111, 150	243, 326, 439, 590, 794
Max. backlash	°	0.5	0.6	0.7	0.8
Max. continuous output power	W	185	90	45	15
Max. peak output power	W	230	115	60	19
Max. continuous input speed	rpm	6000	6000	6000	6000
Max. peak input speed	rpm	7500	7500	7500	7500
Max. continuous torque	N·m	2.3	5.4	9.3	9.3
Max. peak torque	N·m	2.9	6.8	11.6	11.6
Max. efficiency	%	90	80	72	65
Weight	g	156	238	277	315
Gearbox length L	mm	30	44.7	51.3	58

42PGX

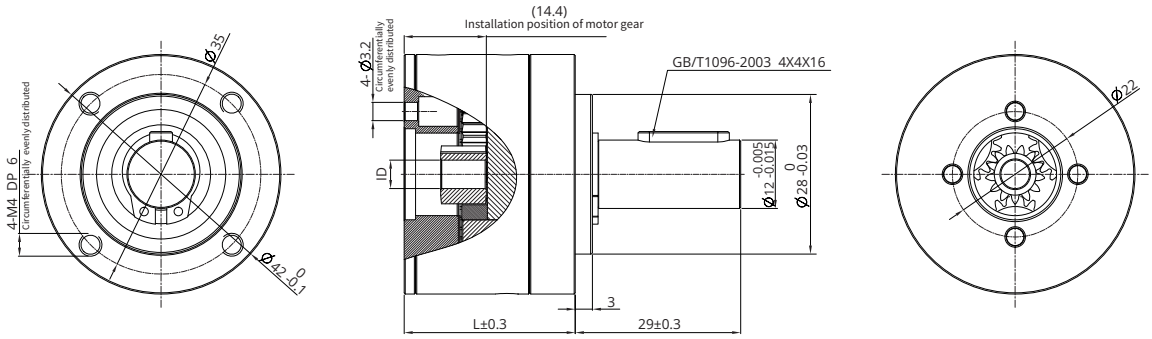

Stage	-	Stage 1	Stage 2	Stage 3	Stage 4
Gear ratio	X : 1	3.9, 5.3	16, 21, 28	62, 83, 111, 150	243, 326, 439, 590, 794
Max. backlash	°	0.3	0.4	0.5	0.6
Max. continuous output power	W	480	200	85	20
Max. peak output power	W	600	250	106	25
Max. continuous input speed	rpm	6000	6000	6000	6000
Max. peak input speed	rpm	7500	7500	7500	7500
Max. continuous torque	N·m	3.0	7.5	15	15
Max. peak torque	N·m	4.5	11.3	22.5	22.5
Max. efficiency	%	90	81	72	64
Weight	g	252	405	476	544
Gearbox length L	mm	36.1	54.9	63.6	72.4

H Frameless Motor

Frameless motors are based on a modular stator and rotor design, delivering high torque density through optimized slot ratios.

The rotor features a large inner bore, while the stator is designed for direct embedded installation, enabling flexible and customized system design, including mounting structures and cooling solutions. An optimized slot-pole combination effectively reduces cogging torque, ensuring smooth and stable operation.

With a compact and highly integrated structure, frameless motors are ideal for applications requiring both high performance and design flexibility.

Part number construction	H-2
25mm	H-3
38mm	H-5
43mm	H-8
50mm	H-10
60mm	H-13
70 mm	H-15
85 mm	H-18
115mm	H-21

Part Number Construction

00	ZW	C	00	X	-1
①	②	③	④	⑤	⑥

① Motor Size

Motor Size (mm)	25	38	43	50	60	70	85	115

② Product Name

ZW = Slotted Frameless Brushless DC Motor

③ Motor Shape

C = Circular type

④ Motor Length

Unit : mm

When the length involves decimal points, use "_" instead

⑤ Motor Casing

X = Frameless type

⑥ Customer Sequence Number

Example

Part Number	50ZWC15X-001
Description	50mm outer diameter Round frameless torque motor Body length: 15mm Frameless type Customization number 001

25mm Series

Motor Characteristics

Motor part number	25ZWC10X-1	
Stator outer diameter	mm	25 (±0.016)
Rotor inner diameter	mm	11.6 (+0.018)
Number of slots	-	12
Pole pairs	-	7
Phase-to-phase resistance	Ω	0.42
Phase-to-phase inductance	mH	0.123
Winding connection method	-	Star connection
Insulation class	-	F
Duty type	-	S2
Feedback method	-	/
Commutation angle	-	120°
Insulation strength (Withstand voltage)	-	600VAC / 1s / 3mA
Insulation resistance	-	50MΩ / 500VDC
Stator weight	g	22
Rotor weight	g	3.2
No-load speed	RPM	26000
No-load current	A	0.65 (REF)
Rated voltage	VDC	24
Rated power	W	70
Rated torque	N·m	0.032
Rated speed	RPM	22650
Rated current	A	3.8
Torque constant	Nm/A	0.009
Back-EMF constant (effective value)	Vrms/Krpm	0.65
Peak torque	N·m	0.105
Peak current	A	13
Rotor inertia	g·cm²	1.47

For customized options, please contact DINGS' or your local distributor

25mm Series

Dimensional Drawings

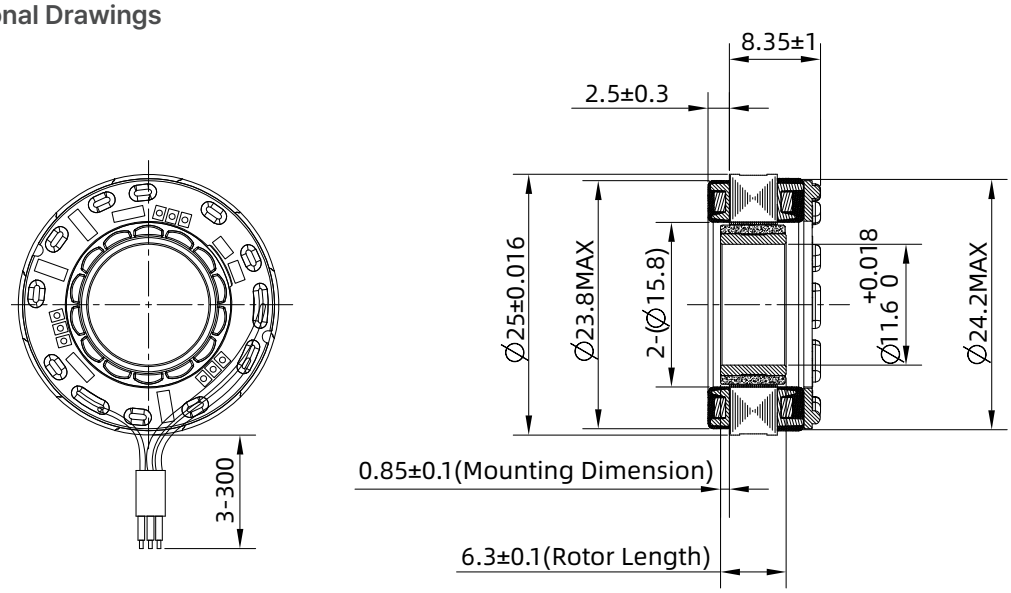

Lead-out type	Lead-out color	Function
UL1332 AWG20	Yellow	U phase
	Red	V phase
	Black	W phase

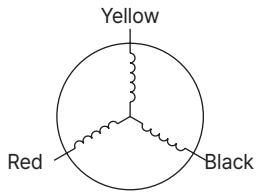

Torque Performance Curves

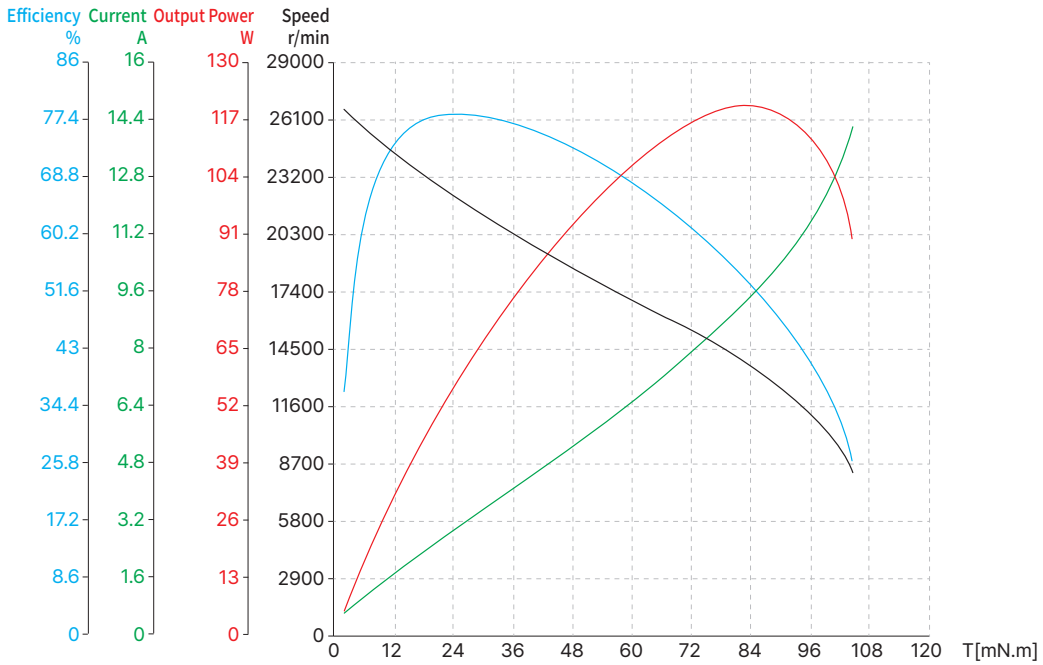

Note : All drawings are 1st-angle projection - ISO Compliant (3D models available)

38mm Series

Motor Characteristics

Motor part number		38ZWC15X-1	38ZWC22X-7
Stator outer diameter	mm	38 (±0.019)	38 (±0.019)
Rotor inner diameter	mm	18 (+0.018)	18 (+0.018)
Overall length (L)	mm	11.3	18.3
Stack length (L1)	mm	0.55	1.05
Rotor length (L2)	mm	8.1	16.1
Number of slots	-	12	12
Pole pairs	-	7	7
Phase-to-phase resistance	Ω	0.8	0.14
Phase-to-phase inductance	mH	0.9	0.185
Winding connection method	-	Star connection	Star connection
Insulation class	-	F	F
Duty type	-	S2	S2
Feedback method	-	/	/
Commutation angle	-	120°	120°
Insulation strength (Withstand voltage)	-	1200VAC / 1s / 3mA	1200VAC / 1s / 3mA
Insulation resistance	-	50MΩ / 500VDC	50MΩ / 500VDC
Stator weight	g	50	87
Rotor weight	g	10	20
No-load speed	RPM	13000	13000
No-load current	A	0.6 (REF)	0.6 (REF)
Rated voltage	VDC	48	48
Rated power	W	110	245
Rated torque	N·m	0.1	0.23
Rated speed	RPM	10470	10190
Rated current	A	2.75	6.10
Torque constant	Nm/A	0.035	0.039
Back-EMF constant (effective value)	Vrms/Krpm	2.6	2.88
Peak torque	N·m	0.32	0.76
Peak current	A	11	24.2
Rotor inertia	g·cm²	10	20

For customized options, please contact DINGS' or your local distributor

38mm Series

Dimensional Drawings

- 38ZWC15X-1

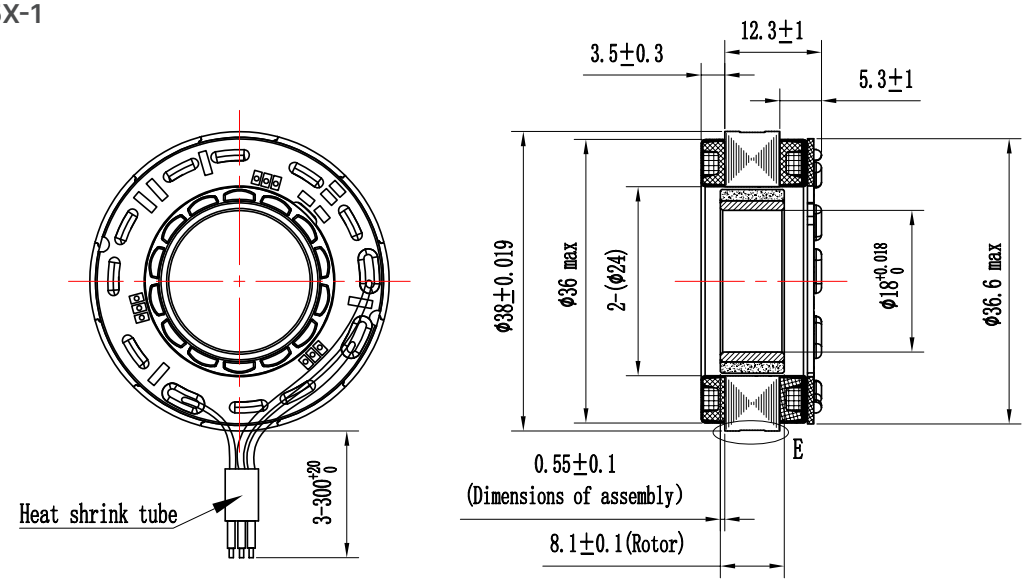

Lead-out type	Lead-out color	Function
UL1332 AWG20	Yellow	U phase
	Red	V phase
	Black	W phase

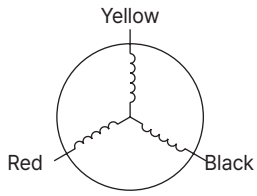

- 38ZWC22X-7

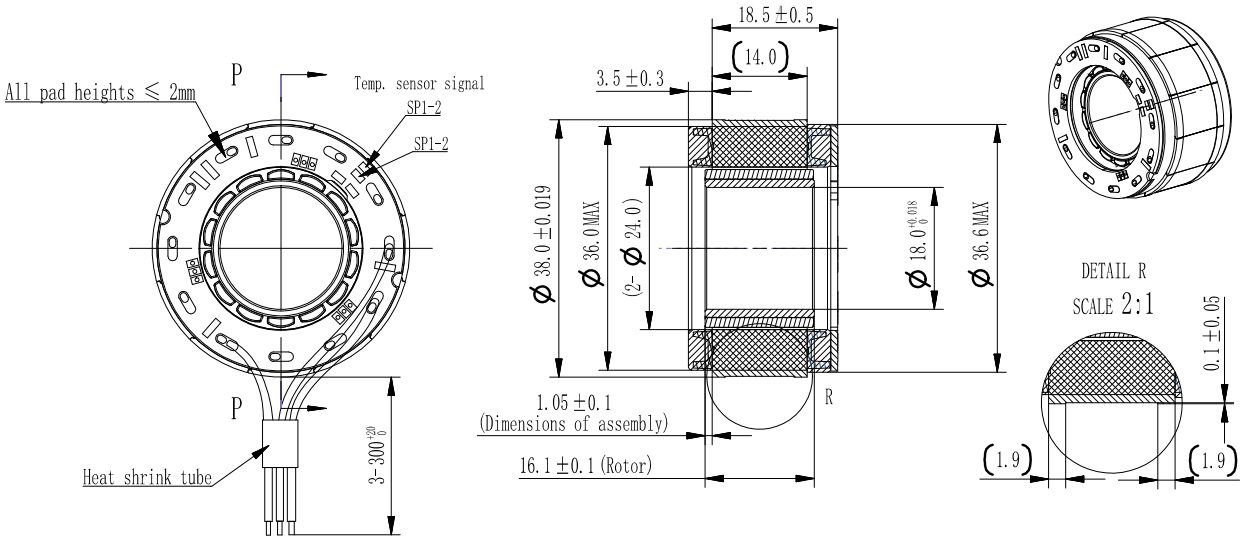

Lead-out type	Lead-out color	Function
UL1332 AWG20	Yellow	U phase
	Red	V phase
	Black	W phase

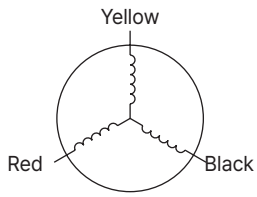

Note : All drawings are 1st-angle projection - ISO Compliant (3D models available)

Torque Performance Curves

- 38ZWC15X-1

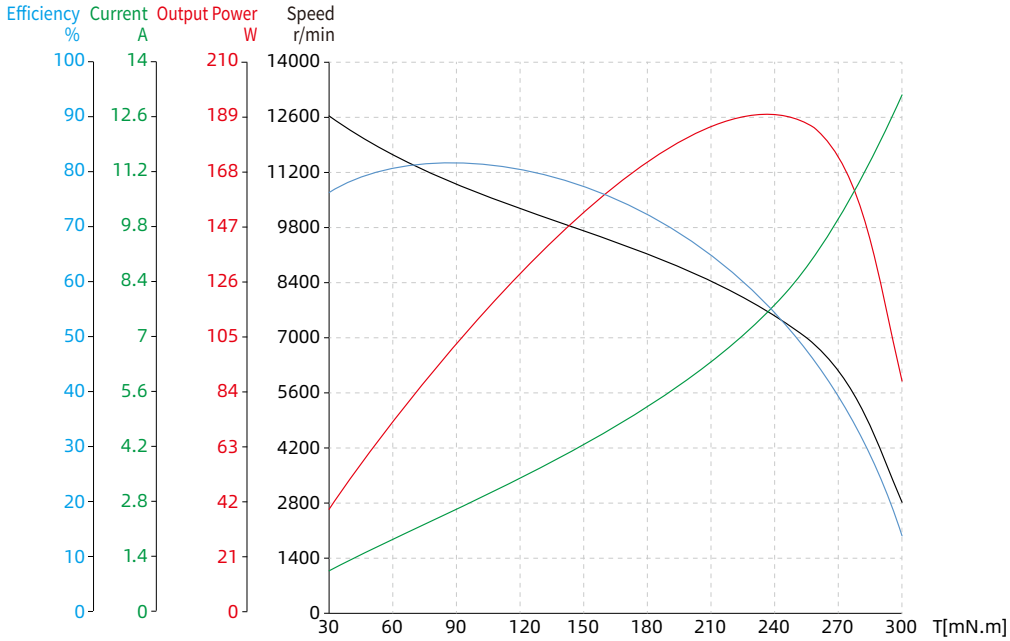

- 38ZWC22X-7

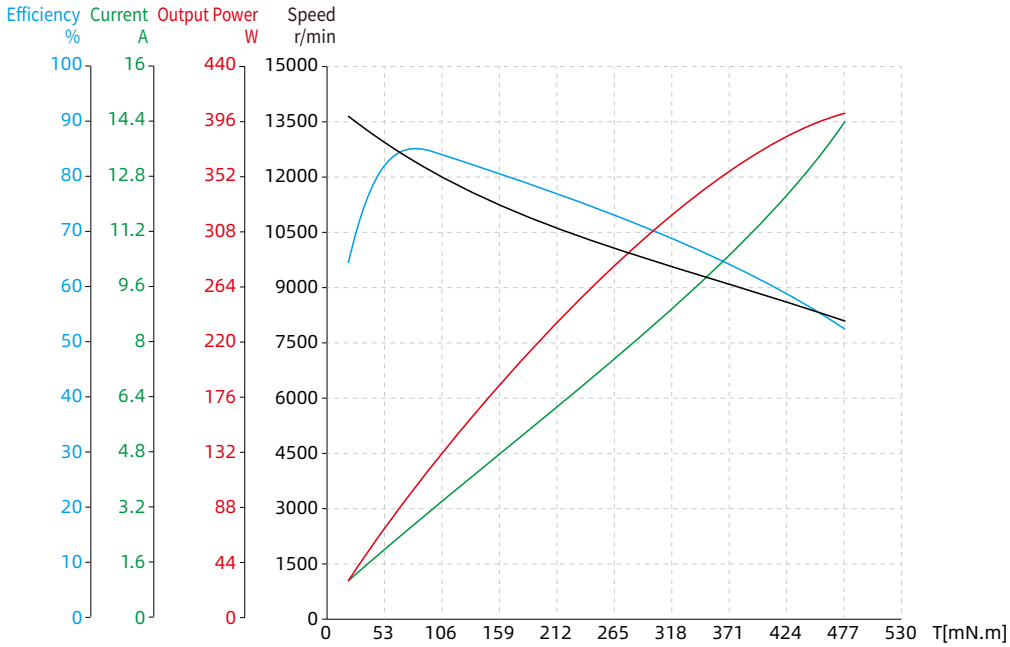

43mm Series

Motor Characteristics

Motor part number	43ZWC15X-2	
Stator outer diameter	mm	43 (±0.031)
Rotor inner diameter	mm	25 (±0.052)
Number of slots	-	18
Pole pairs	-	10
Phase-to-phase resistance	Ω	3.4
Phase-to-phase inductance	mH	2.17
Winding connection method	-	Star connection
Insulation class	-	F
Duty type	-	S2
Feedback method	-	/
Commutation angle	-	120°
Insulation strength (Withstand voltage)	-	1200VAC / 1s / 3mA
Insulation resistance	-	50MΩ / 500VDC
Stator weight	g	50
Rotor weight	g	10
No-load speed	RPM	4200
No-load current	A	0.15 (REF)
Rated voltage	VDC	48
Rated power	W	31.5
Rated torque	N·m	0.1
Rated speed	RPM	3000
Rated current	A	1
Torque constant	Nm/A	0.113
Back-EMF constant (effective value)	Vrms/Krpm	8.4
Peak torque	N·m	0.3
Peak current	A	3.3
Rotor inertia	g·cm²	20

For customized options, please contact DINGS' or your local distributor

43mm Series

Dimensional Drawings

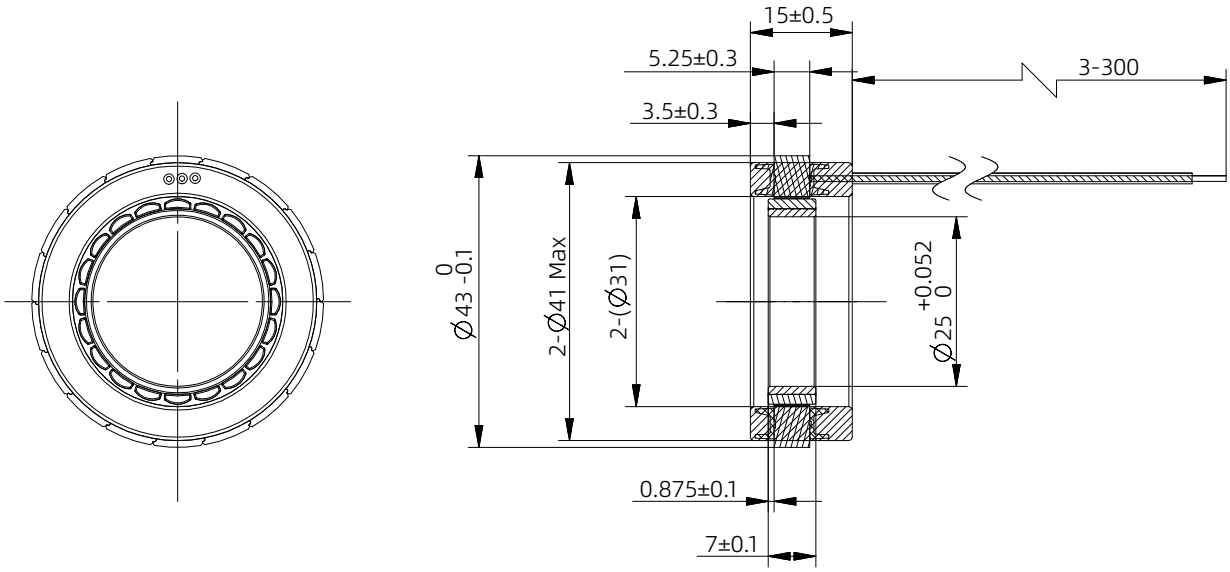

Lead-out type	Lead-out color	Function
UL1332 AWG20	Yellow	U phase
	Red	V phase
	Black	W phase

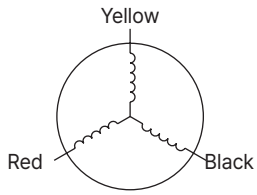

Torque Performance Curves

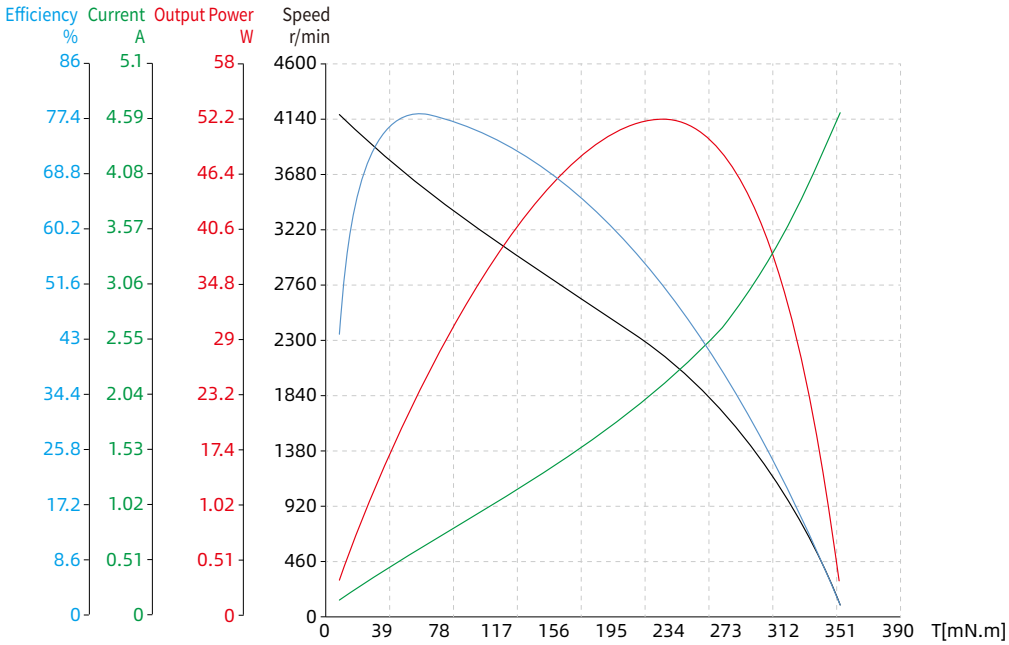

Note : All drawings are 1st-angle projection - ISO Compliant (3D models available)

50mm Series

Motor Characteristics

Motor part number		50ZWC15X-1	50ZWC25X-1
Stator outer diameter	mm	50±0.031	50±0.031
Rotor inner diameter	mm	30+0.033	30+0.033
Overall length (L)	mm	13.2	19.5
Stack length (L1)	mm	8.9	15.2
Rotor length (L2)	mm	17.7±0.2	24±0.2
Number of slots	-	18	18
Pole pairs	-	10	10
Phase-to-phase resistance	Ω	0.62	0.6
Phase-to-phase inductance	mH	0.44	0.45
Winding connection method	-	Star connection	Star connection
Insulation class	-	F	F
Duty type	-	S2	S2
Feedback method	-	Hall sensor	Hall sensor
Commutation angle	-	120°	120°
Insulation strength (Withstand voltage)	-	500VAC / 1mA / 1s	500VAC / 1mA / 1s
Insulation resistance	-	100MΩ / 500VDC	100MΩ / 500VDC
Stator weight	g	77.5	124
Rotor weight	g	38	50
No-load speed	RPM	6400	5000
No-load current	A	0.4(REF)	1.1(REF)
Rated voltage	VDC	48	48
Rated power	W	168	219
Rated torque	N·m	0.3	0.51
Rated speed	RPM	5350	4100
Rated current	A	4.4	5.65
Torque constant	Nm/A	0.074	0.092
Back-EMF constant (effective value)	Vrms/Krpm	5.5	6.8
Peak torque	N·m	0.96	1.5
Peak current	A	10.7	16.1
Rotor inertia	g·cm²	100	135

Dimensional Drawings

- **50ZWC15X-1**

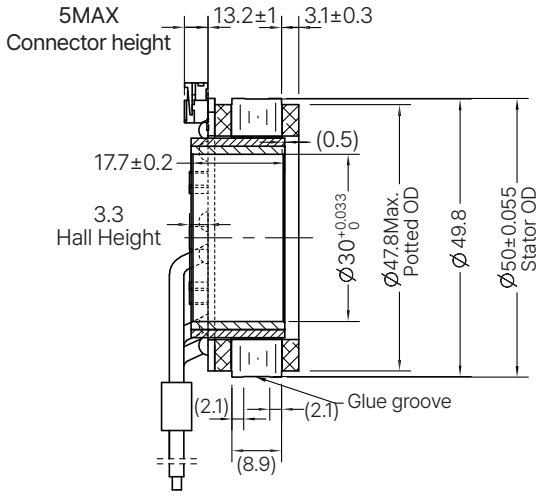

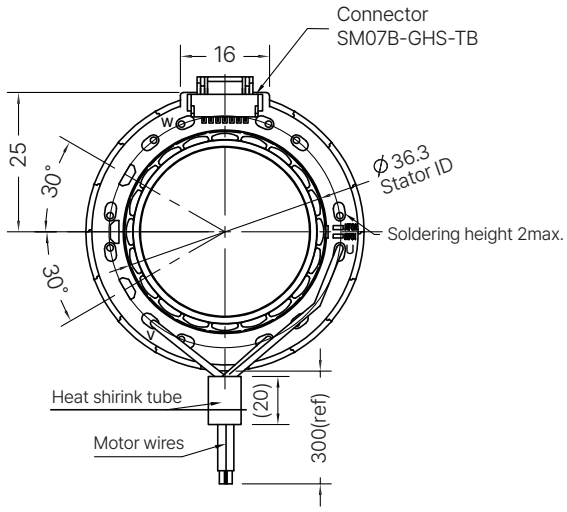

Lead-out type	Lead-out color	Function
UL1332 AWG20	Yellow	U phase
	Red	V phase
	Black	W phase

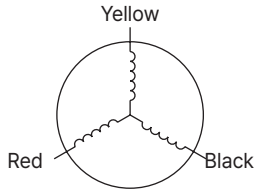

- **50ZWC25X-1**

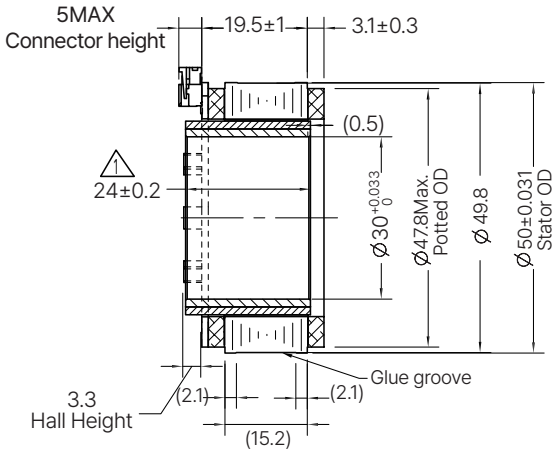

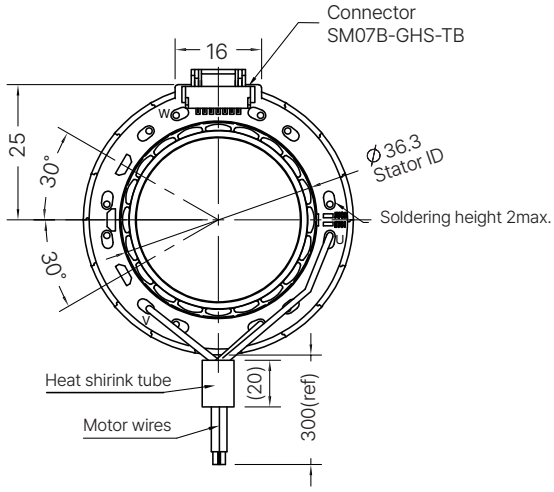

Lead-out type	Lead-out color	Function
UL1332 AWG20	Yellow	U phase
	Red	V phase
	Black	W phase

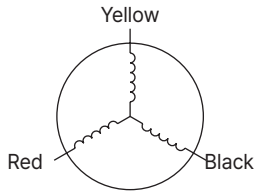

Note : All drawings are 1st-angle projection - ISO Compliant (3D models available)

50mm Series

Torque Performance Curves

- 50ZWC15X-1

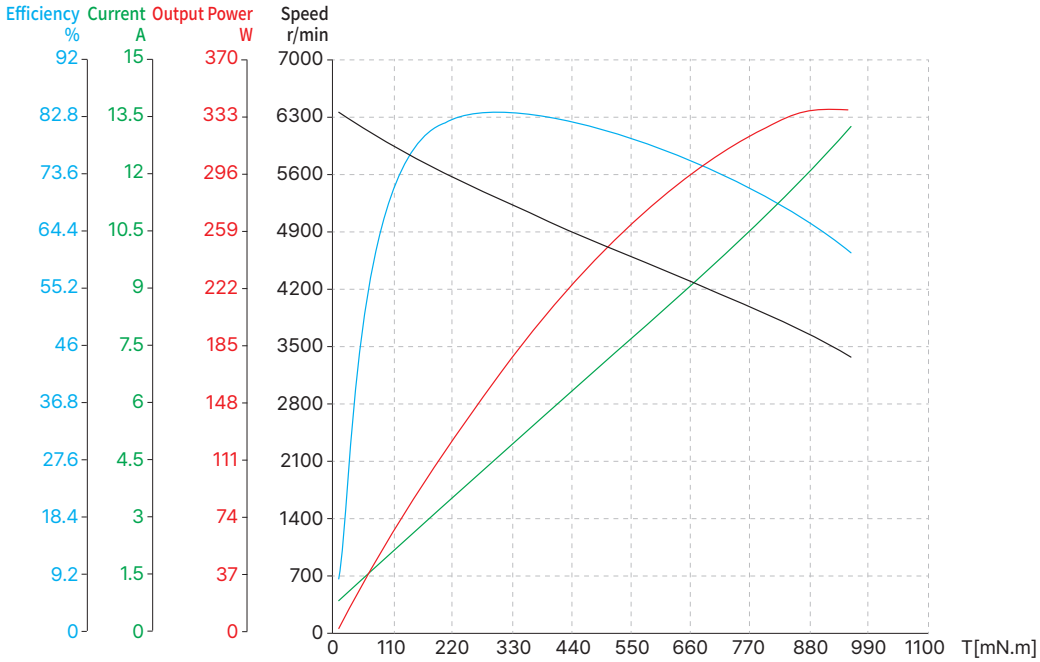

- 50ZWC25X-1

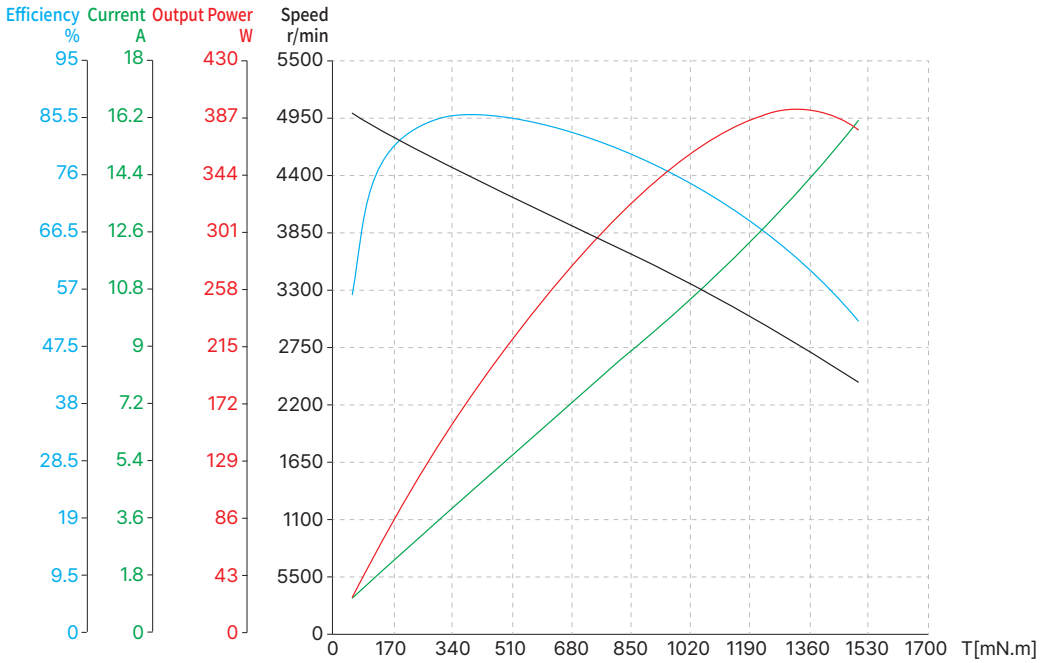

60mm Series

Motor Characteristics

Motor part number	60ZWC25X-1	
Stator outer diameter	mm	60 (0 / -0.08)
Rotor inner diameter	mm	36 (+0.039)
Number of slots	-	18
Pole pairs	-	10
Phase-to-phase resistance	Ω	0.24
Phase-to-phase inductance	mH	0.42
Winding connection method	-	Star connection
Insulation class	-	F
Duty type	-	S2
Feedback method	-	Hall sensor
Commutation angle	-	120°
Insulation strength (Withstand voltage)	-	1200VAC / 3mA / 1s
Insulation resistance	-	100MΩ / 500VDC
Stator weight	g	167
Rotor weight	g	48
No-load speed	RPM	4000
No-load current	A	1.1 (REF)
Rated voltage	VDC	48
Rated power	W	205
Rated torque	N·m	0.6
Rated speed	RPM	3250
Rated current	A	5.1
Torque constant	Nm/A	0.12
Back-EMF constant (effective value)	Vrms/Krpm	8.85
Peak torque	N·m	1.8
Peak current	A	14.5
Rotor inertia	g·cm²	122

60mm Series

Dimensional Drawings

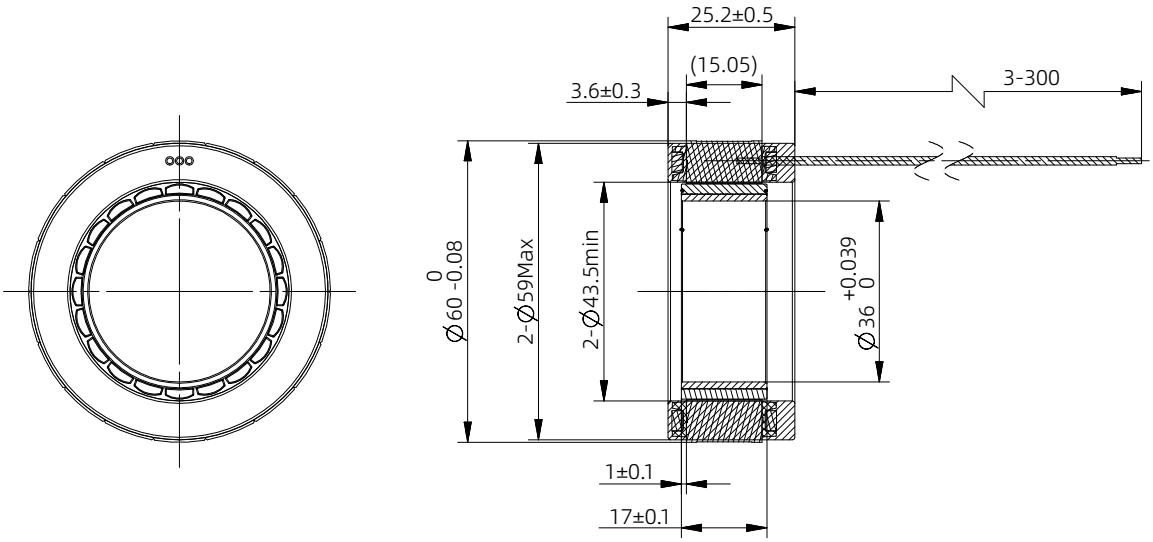

Lead-out type	Lead-out color	Function
UL1332 AWG20	Yellow	U phase
	Red	V phase
	Black	W phase

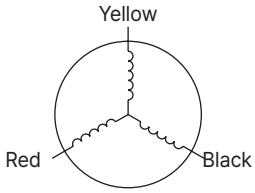

Torque Performance Curves

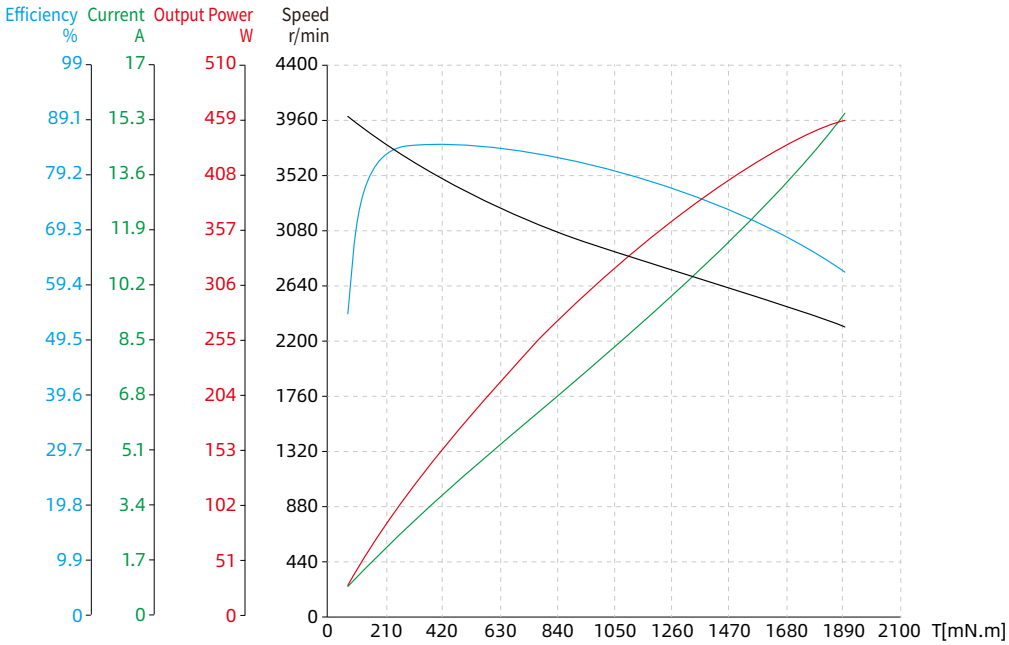

Note : All drawings are 1st-angle projection - ISO Compliant (3D models available)

70mm Series

Motor Characteristics

Motor part number		70ZWC20X-1	70ZWC25X-1
Stator outer diameter	mm	69±0.037	69±0.037
Rotor inner diameter	mm	42+0.039	42+0.039
Overall length (L)	mm	15.9	21.5
Stack length (L1)	mm	10.3	15.9
Rotor length (L2)	mm	20.5±0.2	26±0.2
Number of slots	-	18	18
Pole pairs	-	10	10
Phase-to-phase resistance	Ω	0.32	0.22
Phase-to-phase inductance	mH	0.52	0.35
Winding connection method	-	Star connection	Star connection
Insulation class	-	F	F
Duty type	-	S2	S2
Feedback method	-	Hall sensor	Hall sensor
Commutation angle	-	120°	120°
Insulation strength (Withstand voltage)	-	500VAC / 1mA / 1s	500VAC / 1mA / 1s
Insulation resistance	-	100MΩ / 500VDC	100MΩ / 500VDC
Stator weight	g	167.5	224
Rotor weight	g	72	90
No-load speed	RPM	4350	4400
No-load current	A	0.5(REF)	1.3(REF)
Rated voltage	VDC	48	48
Rated power	W	216	456
Rated torque	N·m	0.55	1.3
Rated speed	RPM	3750	3350
Rated current	A	5.4	11.4
Torque constant	Nm/A	0.109	0.13
Back-EMF constant (effective value)	Vrms/Krpm	8.1	9.6
Peak torque	N·m	1.65	2.6
Peak current	A	14.2	21
Rotor inertia	g·cm²	358	455

For customized options, please contact DINGS' or your local distributor

70mm Series

Dimensional Drawings

- **70ZWC20X-1**

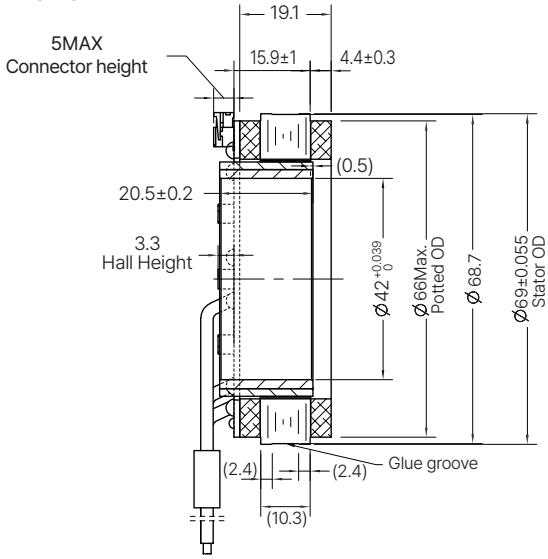

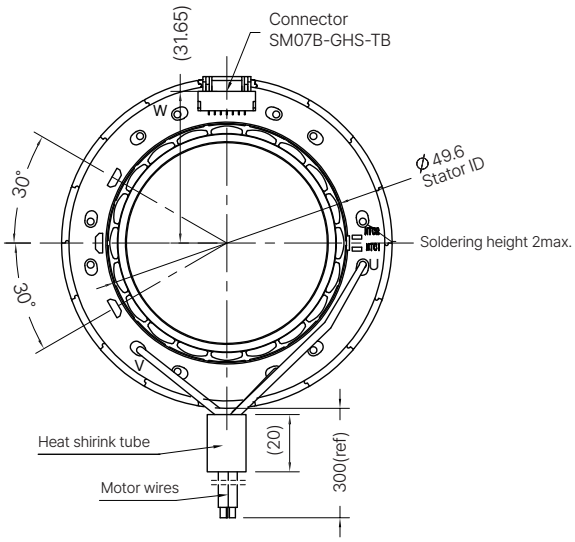

Lead-out type	Lead-out color	Function
UL1332 AWG20	Yellow	U phase
	Red	V phase
	Black	W phase

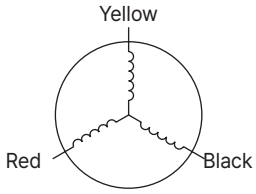

- **70ZWC25X-1**

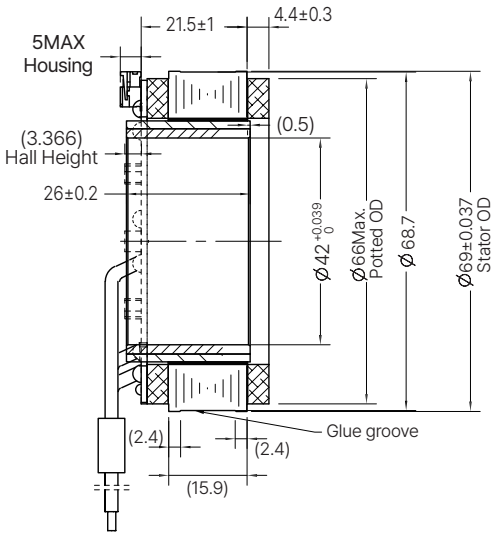

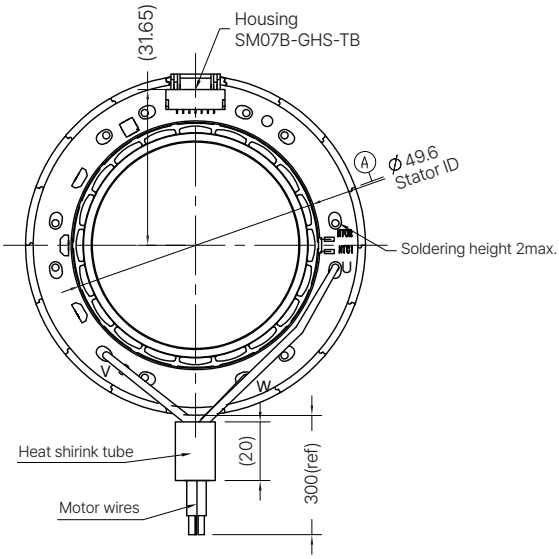

Lead-out type	Lead-out color	Function
UL1332 AWG18	Yellow	U phase
	Red	V phase
	Black	W phase

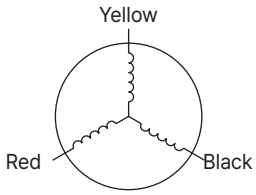

Note : All drawings are 1st-angle projection - ISO Compliant (3D models available)

Torque Performance Curves

- 70ZWC20X-1

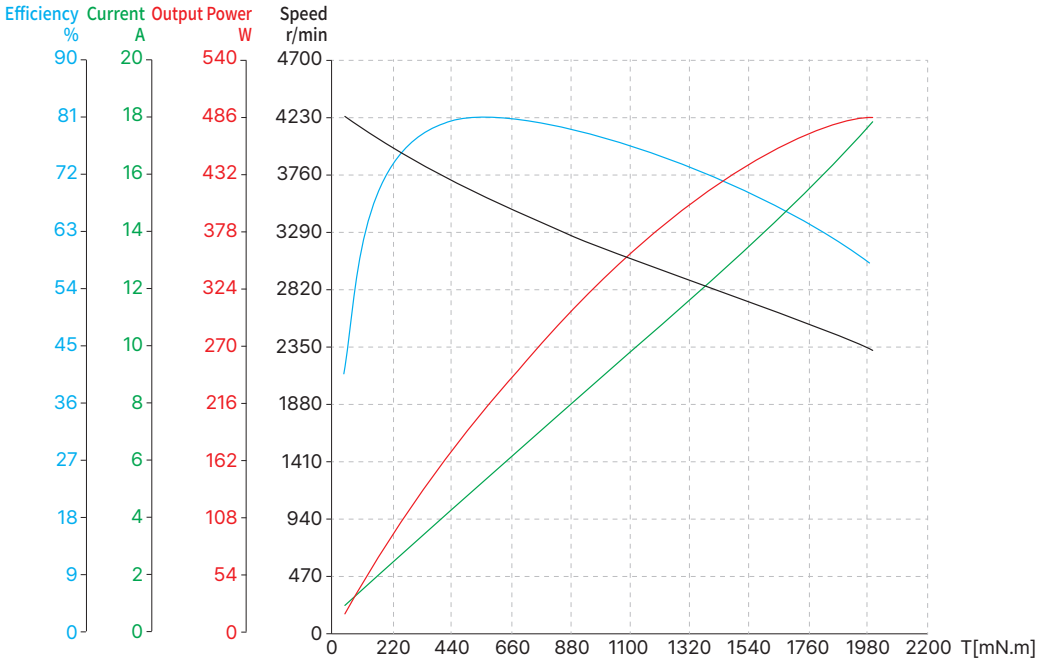

- 70ZWC25X-1

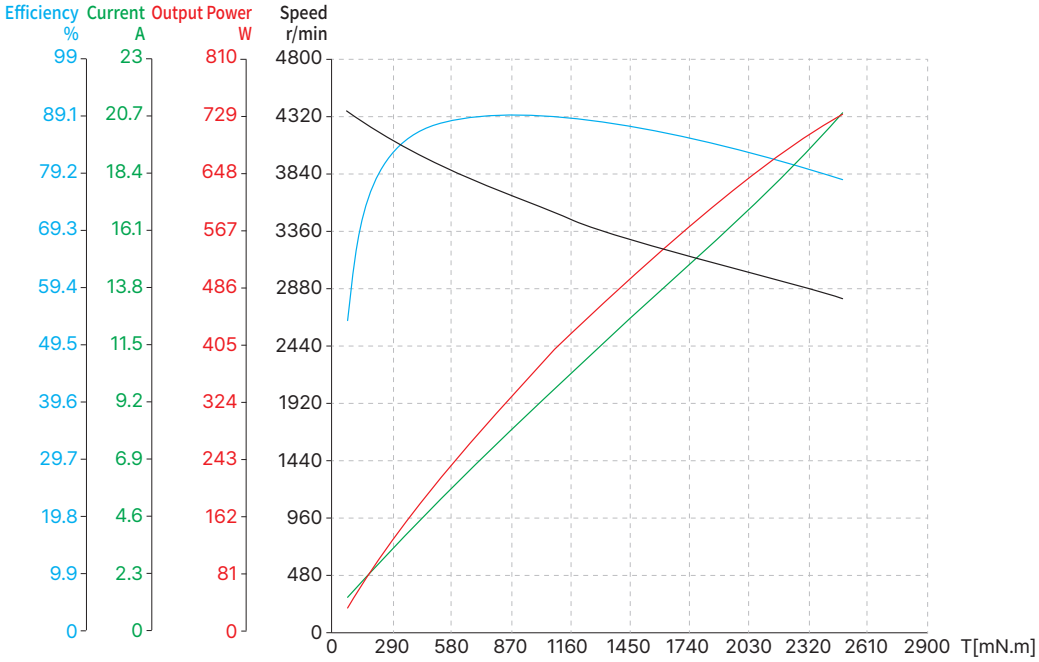

85mm Series

Motor Characteristics

Motor part number		85ZWC25X-1	85ZWC35X-1
Stator outer diameter	mm	85±0.043	85±0.043
Rotor inner diameter	mm	52+0.046	52+0.046
Overall length (L)	mm	20.3	30.1
Stack length (L1)	mm	13.8	23.6
Rotor length (L2)	mm	25±0.2	35±0.2
Number of slots	-	18	18
Pole pairs	-	10	10
Phase-to-phase resistance	Ω	0.14	0.06
Phase-to-phase inductance	mH	0.34	0.12
Winding connection method	-	Star connection	Star connection
Insulation class	-	F	F
Duty type	-	S2	S2
Feedback method	-	Hall sensor	Hall sensor
Commutation angle	-	120°	120°
Insulation strength (Withstand voltage)	-	500VAC / 1mA / 1s	500VAC / 1mA / 1s
Insulation resistance	-	100MΩ / 500VDC	100MΩ / 500VDC
Stator weight	g	315	460
Rotor weight	g	135	189
No-load speed	RPM	3650	4700
No-load current	A	0.6(REF)	2.4(REF)
Rated voltage	VDC	48	48
Rated power	W	422	827
Rated torque	N·m	1.3	2
Rated speed	RPM	3100	3950
Rated current	A	10.3	20.6
Torque constant	Nm/A	0.16	0.117
Back-EMF constant (effective value)	Vrms/Krpm	9.7	8.66
Peak torque	N·m	3.9	6
Peak current	A	27	62
Rotor inertia	g·cm²	1086	1520

Dimensional Drawings

85ZWC25X-1

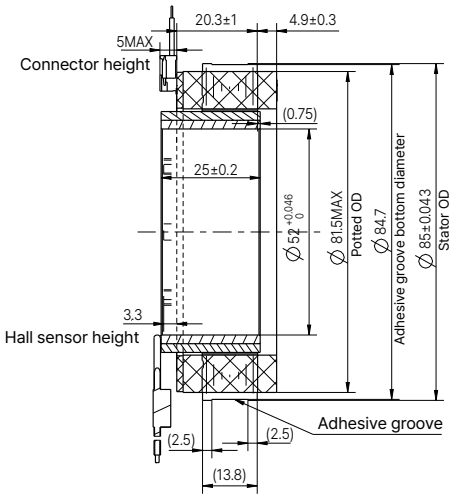

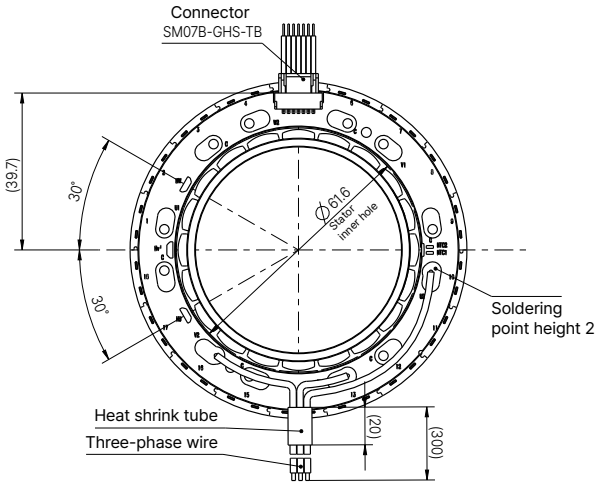

Lead-out type	Lead-out color	Function
UL1332 AWG16	Yellow	U phase
	Red	V phase
	Black	W phase

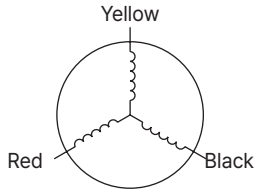

85ZWC35X-1

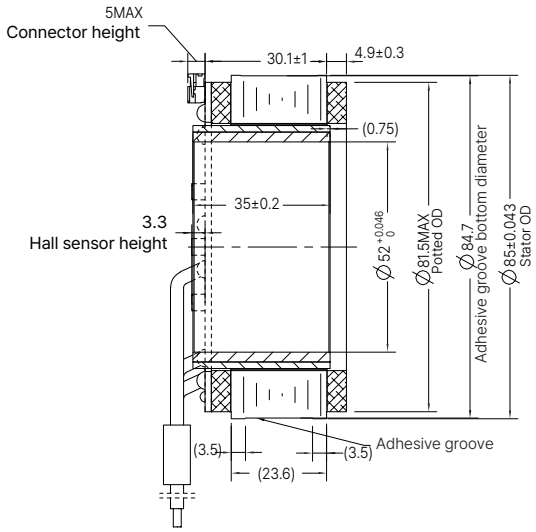

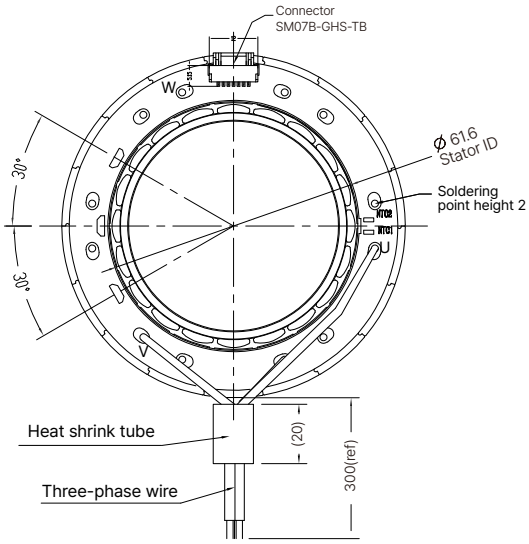

Lead-out type	Lead-out color	Function
UL1332 AWG16	Yellow	U phase
	Red	V phase
	Black	W phase

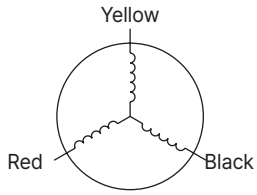

Note : All drawings are 1st-angle projection - ISO Compliant (3D models available)

85mm Series

Torque Performance Curves

- 85ZWC25X-1

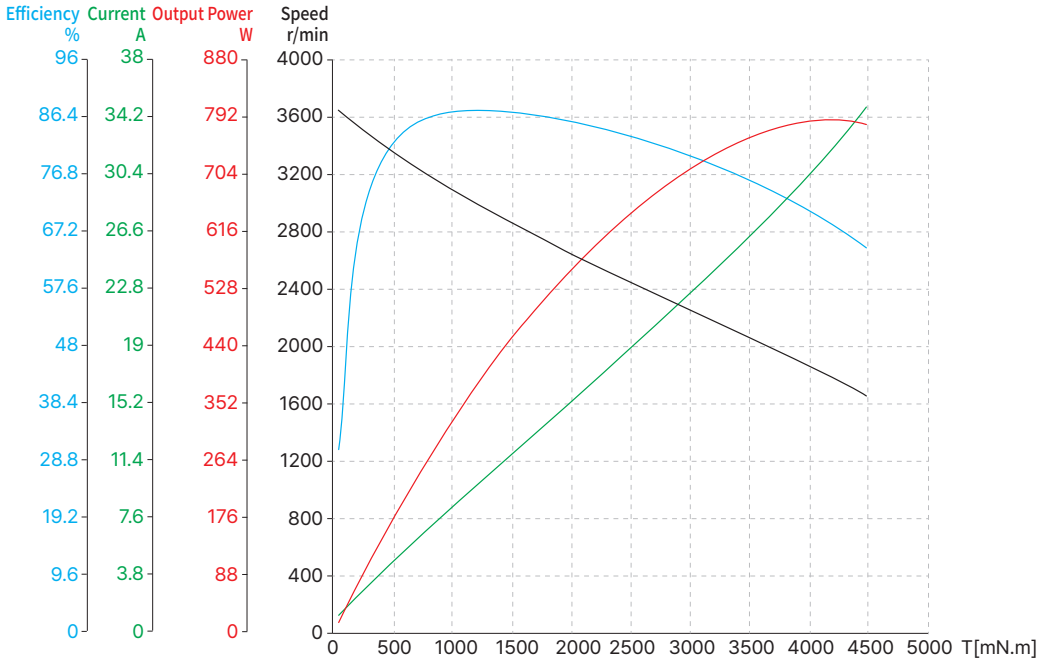

- 85ZWC35X-1

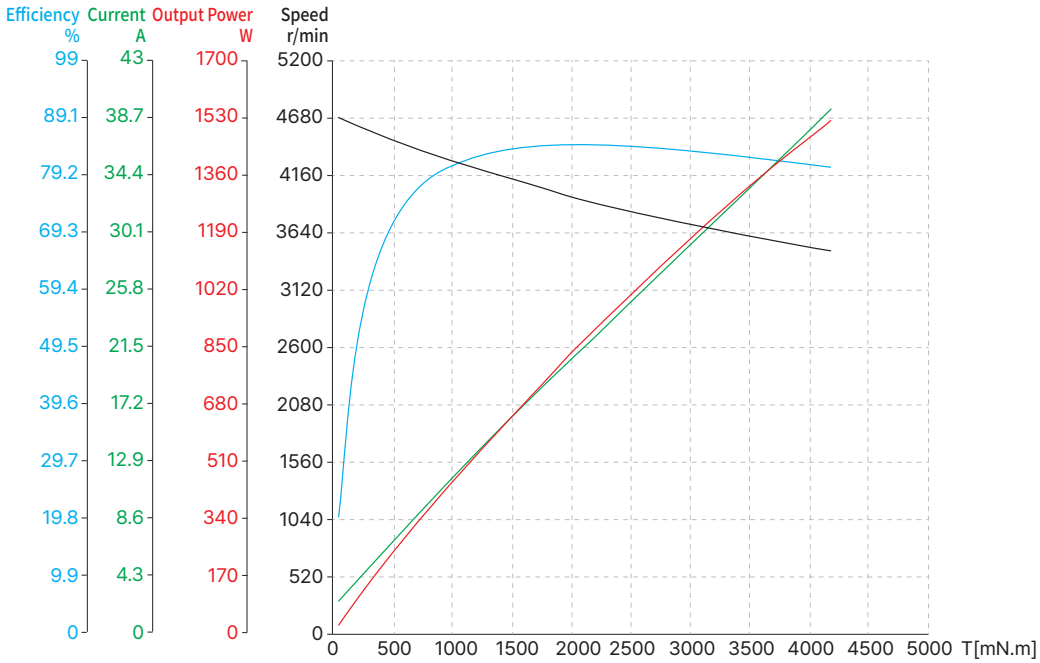

115mm Series

Motor Characteristics

Motor part number	115ZWC37X-1	
Stator outer diameter	mm	115±0.027
Rotor inner diameter	mm	74+0.03
Number of slots	-	27
Pole pairs	-	15
Phase-to-phase resistance	Ω	0.122
Phase-to-phase inductance	mH	0.477
Winding connection method	-	Star connection
Insulation class	-	F
Duty type	-	S2
Feedback method	-	Hall sensor
Commutation angle	-	120°
Insulation strength (Withstand voltage)	-	1200VAC / 1s / 3mA
Insulation resistance	-	50MΩ / 500VDC
Stator weight	g	815
Rotor weight	g	245
No-load speed	RPM	1750
No-load current	A	1.8(REF)
Rated voltage	VDC	48
Rated power	W	570
Rated torque	N·m	3.9
Rated speed	RPM	1400
Rated current	A	14.1
Torque constant	Nm/A	0.281
Back-EMF constant (effective value)	Vrms/Krpm	20.8
Peak torque	N·m	12.7
Peak current	A	47
Rotor inertia	g·cm²	3930

For customized options, please contact DINGS' or your local distributor

115mm Series

Dimensional Drawings

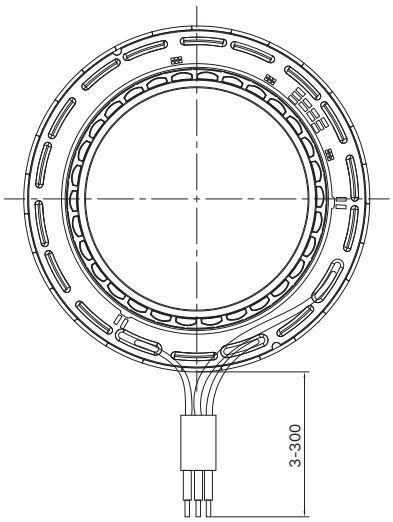

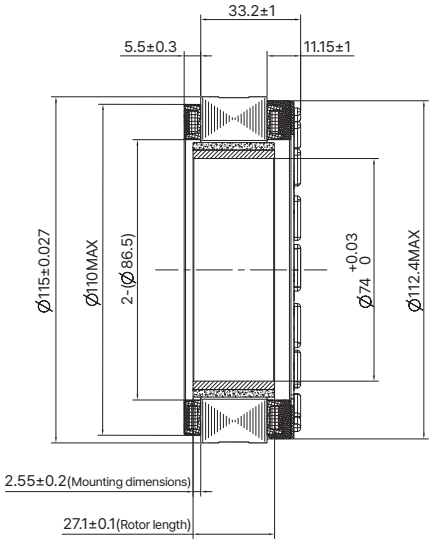

Lead-out type	Lead-out color	Function
UL1332 AWG14	Yellow	U phase
	Red	V phase
	Black	W phase

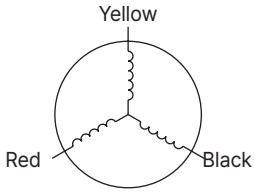

Torque Performance Curves

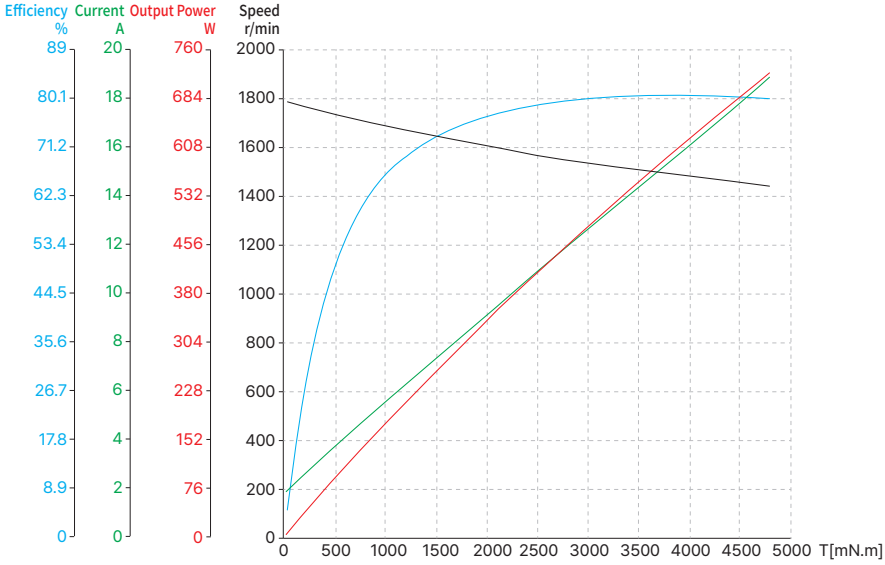

Note : All drawings are 1st-angle projection - ISO Compliant (3D models available)

I Linear Module

Built on DINGS' precision linear motion platform and combined with linear guide rails, we have developed the DLM, LR-DLM, DSM, DSLM, DWM, and DMP series linear modules.

The products feature a compact structure and high positioning accuracy, helping customers achieve equipment miniaturization. The modules offer a variety of lead screw or ball screw options, multiple stroke lengths, optional accessories such as encoders and power brakes (refer to the optional accessories for sliding screw linear actuators), as well as customized solutions.

DLM / LR-DLM series	I-2
DSM series	I-34
DSLM series	I-46
DWM series	I-51
DMP series	I-71

DLM / LR-DLM Series

Based on DINGS' motion platform technologies, the DLM and LR-DLM series combine high-precision lead screw linear actuators with self-developed linear module structures to provide compact and reliable linear motion solutions.

The DLM series and LR-DLM series offer high precision, a wide range of stroke options and lead-based customization. These linear modules can provide customers with integrated, customized solutions.

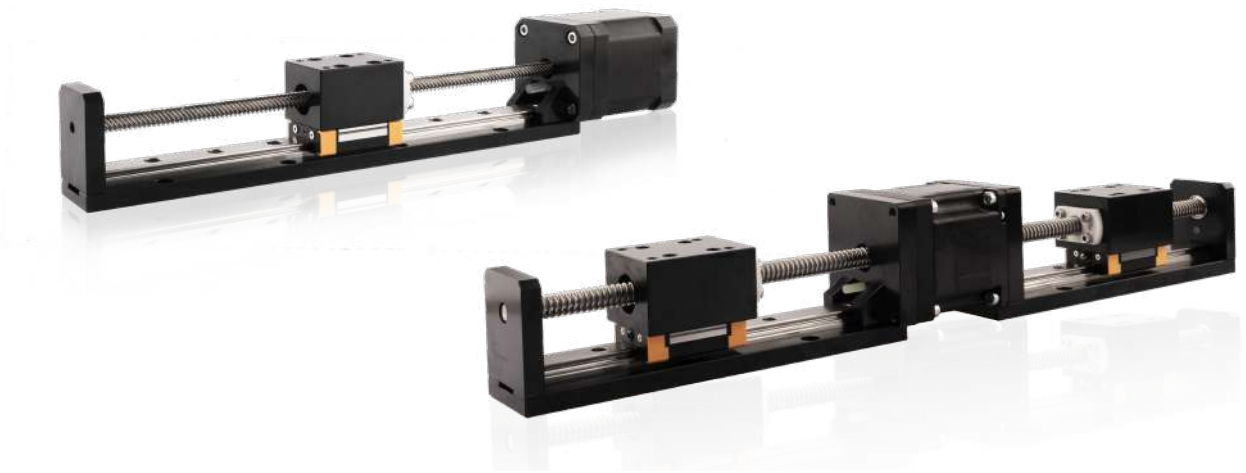

DLM : Part number construction	I-3
LR-DLM : Part number construction	I-4
14 mm DLM	I-5
20 mm DLM / LR-DLM	I-8
28 mm DLM / LR-DLM	I-12
35 mm DLM / LR-DLM	I-16
42 mm DLM / LR-DLM	I-22
57 mm DLM / LR-DLM	I-28

Part Number Construction - DLM

DLM 100 - 17 E 2 1 10 S 4 - EK7D - 001

① ② ③ ④ ⑤ ⑥ ⑦ ⑧ ⑨ ⑩ ⑪

① Product Name
DLM Series Module

② Stroke (mm)
100 = 100mm

③ Motor Size

Motor Size (mm)	14	20	28	35	42	57
Motor Size (NEMA)	6	8	11	14	17	23

④ Motor Type
E = External type
N = Non-Captive type

⑤ Motor Step Angle
2 = 2-phase, 1.8° step angle
4 = 2-phase, 0.9° step angle

⑥ Motor Length
1 = Single stack
2 = Double stack

⑦ Rated Current / Phase
XX = X.X (A) / Phase

⑧ Lead Screw Code
Please refer to the lead screw code selection table

⑨ Number of Lead Wires
4 = 4-wire leads
6 = 6-wire leads

⑩ Option
EKX = Encoder [X = Encoder Resolution]
P = Manual knob
B = Brake
X = Rear shaft
R = Encoder ready
C = Customization
N = No rear-end machining

⑪ Customer Sequence Number

Example

Part Number	DLM100-17E2110S4-EK7D-001
Description	DLM Linear Module 100mm Stroke NEMA 17 External Linear Actuator 2-phase / 1.8° Stepper Single Stack 1.0A / Phase S Lead (0.25" or 6.35mm) 4-wire leads EK7D Encoder with differential output 1,000 lines Serial Number 001

Part Number Construction - LR-DLM

DLM	100	-	8	E	2	2	05	G	4	-	L	-	101
①	②		③	④	⑤	⑥	⑦	⑧	⑨		⑩		⑪

① Product Name

LR DLM Series Module

② Stroke (mm)

100 = 100mm

③ Motor Size

Motor Size (mm)	20	28	35	42	57
Motor Size (NEMA)	8	11	14	17	23

④ Motor Type

E = External type

⑤ Motor Step Angle

2 = 2-phase, 1.8° step angle

4 = 2-phase, 0.9° step angle

⑥ Motor Length

1 = Single stack

2 = Double stack

⑦ Rated Current / Phase

XX = X.X (A) / Phase

⑧ Lead Screw Code

Please refer to the lead screw code selection table

⑨ Number of Lead Wires

4 = 4-wire leads

6 = 6-wire leads

⑩ LR DLM

"L" indicates the LR-DLM series

⑪ Customer Sequence Number

Example

Part Number	DLM100-8E2205G4-L-001
Description	LR DLM Linear Module 100mm Stroke NEMA 8 External Linear Actuator 2-phase / 1.8° Stepper Double Stack 0.5A / Phase G Lead (0.0787" or 2.0mm) 4-wire leads LR DLM Serial Number 001

Size 14mm DLM

Based on DINGS' high-precision lead screw linear actuator platform and self-developed compact linear module structure, the DLM 14mm series provides compact, reliable, and high-precision linear motion solutions.

The DLM 14mm series offers a wide range of stroke and lead options with extensive customization capabilities, enabling integrated customized solutions for various applications.

Motor Characteristics

Motor	Voltage (V)	Current (A [RMS])	Resistance (Ω)	Inductance (mH)	Weight (g)	Lead Wire No.	Motor Length (mm)
6-2103	6.6	0.25	22	4.5	60	4	32

Available Lead Screw and Travel per Step

Screw Dia. (inch)	Screw Dia. (mm)	Lead (inch)	Lead (mm)	Lead Code	Travel Per Step @1.8° (mm)*
0.138	3.5	0.0118	0.3	AF	0.0015
0.138	3.5	0.024	0.6096	AA	0.003048
0.138	3.5	0.048	1.2192	B	0.006096
0.138	3.5	0.0787	2	G	0.01
0.138	3.5	0.1575	4	M	0.02
0.138	3.5	0.315	8	T	0.04

Mechanical Specifications

Model	C100B(dyn)(N)	Co(stat)(N)	Mro(Nm)	Mpo(Nm)	Myo(Nm)
DLM / LR-DLM 14	231	385	1.176	0.693	0.693

Size 14mm DLM

Dimensional Drawings

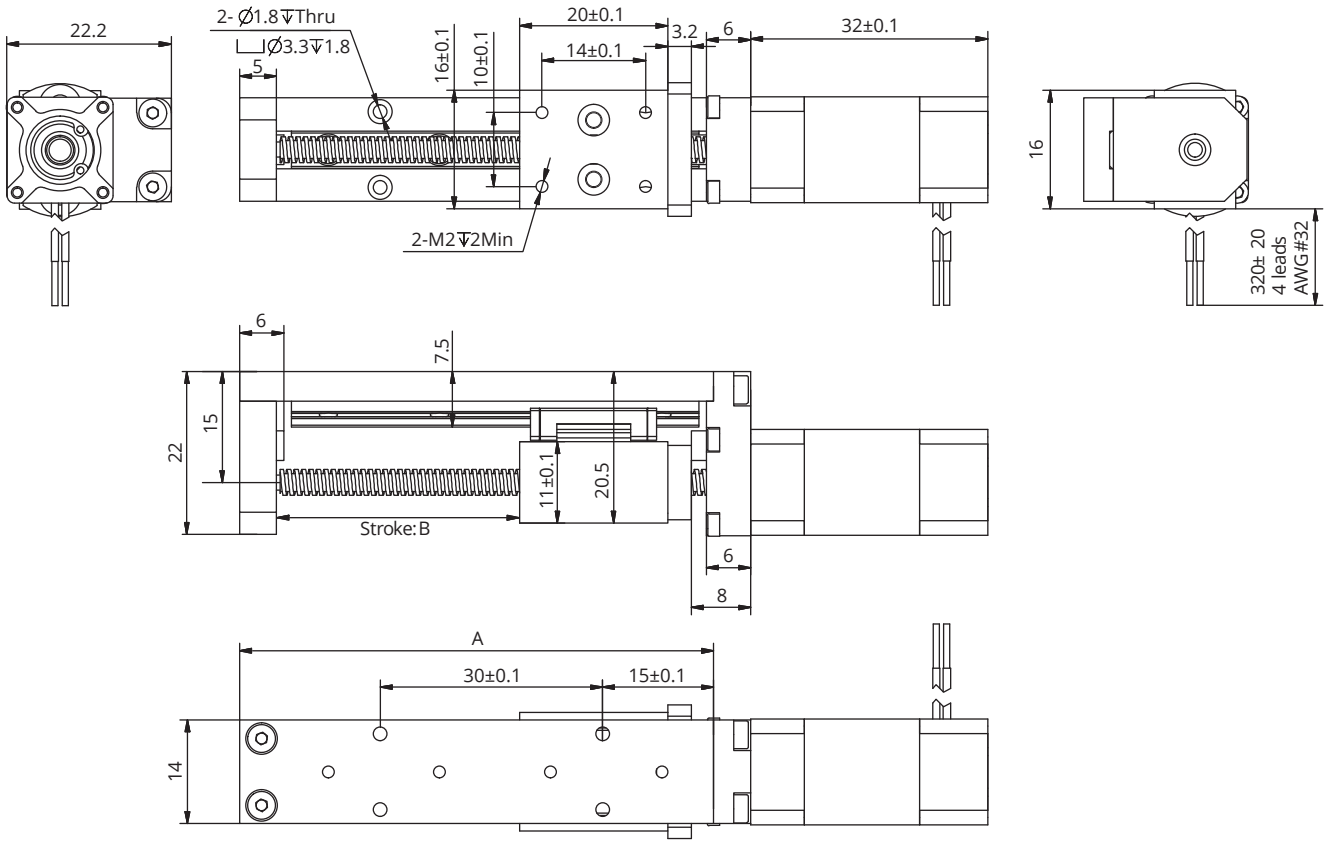

Available Stroke Selection

Size A (mm)	Stroke B (mm)	Weight (kg)	
		Single stack	Double stack
60	20	0.096	-
80	40	0.103	-
100	60	0.109	-
120	80	0.116	-
140	100	0.122	-

* Weight values are for reference only and may vary with actual configuration.

Note : All drawings are 1st-angle projection - ISO Compliant (3D models available)

Speed Thrust Curves

Size 6 Single Stack Speed Thrust Curves

kg ※Bipolar chopper constant current drive operating current 0.25A (RMS)

(Recommended Load Limit 1.5kg)

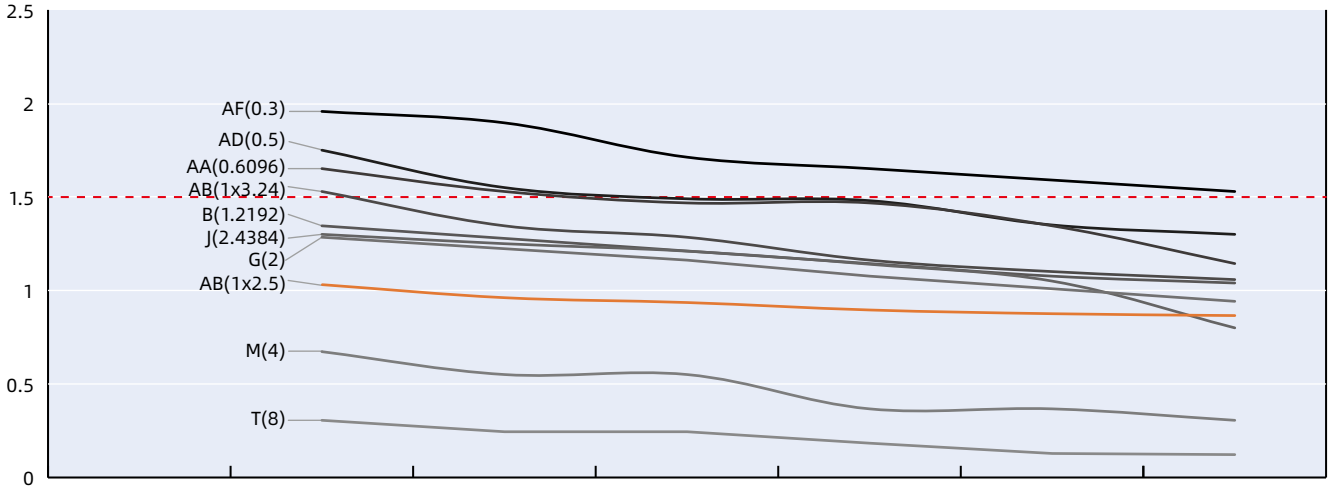

T(mm/s)	8	24	40	60	80	100
M(mm/s)	4	12	20	30	40	50
J(mm/s)	2.4384	7.3152	14.6304	18.288	24.384	30.48
G(mm/s)	2	6	10	15	20	25
B(mm/s)	1.2192	3.6576	6.096	9.144	12.192	15.24
AB(mm/s)	1	3	5	7.5	10	12.5
AA(mm/s)	0.6096	1.8288	3.048	4.572	6.096	7.62
AD(mm/s)	0.5	1.5	3	3.75	5	6.25
AF(mm/s)	0.3	0.9	1.5	2.25	3	3.75
Speed r/min	60	180	360	450	600	750
Pulse pps	200	600	1000	1500	2000	2500

TEST CONDITION

Testing Voltage: 24Vdc, Driver Model: DS-OLS2-FPD bipolar, chopper driver at rated current (rms).
Motor thrust may vary depending on voltage and driver conditions. 50% thrust margin is recommended.

Size 20mm DLM / LR-DLM

Based on DINGS' high-precision lead screw linear actuator platform and self-developed compact linear module structure, the DLM and LR-DLM 20mm series provide compact, reliable, and high-precision linear motion solutions.

The DLM and LR-DLM 20mm series offer a wide range of stroke and lead options with extensive customization capabilities, enabling integrated customized solutions for various applications.

Motor Characteristics

Motor	Voltage (V)	Current (A [RMS])	Resistance (Ω)	Inductance (mH)	Lead wires	Motor length (mm)
8E2105	2.5	0.5	5.1	1.5	4	27.2
8E2205	4.4	0.5	8.8	2.7	4	38.1

Available Lead Screw and Travel per Step

Screw Dia. (inch)	Screw Dia. (mm)	Lead (inch)	Lead (mm)	Lead Code	Travel Per Step @1.8° (mm)*
0.138	3.5	0.0118	0.3	AF	0.0015
0.138	3.5	0.024	0.6096	AA	0.003048
0.128	3.24	0.0394	1	AB	0.005
0.138	3.5	0.048	1.2192	B	0.006096
0.138	3.5	0.0787	2	G*	0.01
0.138	3.5	0.096	2.4384	J	0.012192
0.138	3.5	0.1575	4	M	0.02
0.138	3.5	0.315	8	T	0.04

* Lead code G is only available for LR-DLM 20mm

Mechanical Specifications

Model	C100B(dyn)(N)	Co(stat)(N)	Mro(Nm)	Mpo(Nm)	Myo(Nm)
DLM / LR-DLM 20	714	1071	3.794	2.219	2.219

Size 20mm DLM / LR-DLM

Dimensional Drawings

20mm DLM

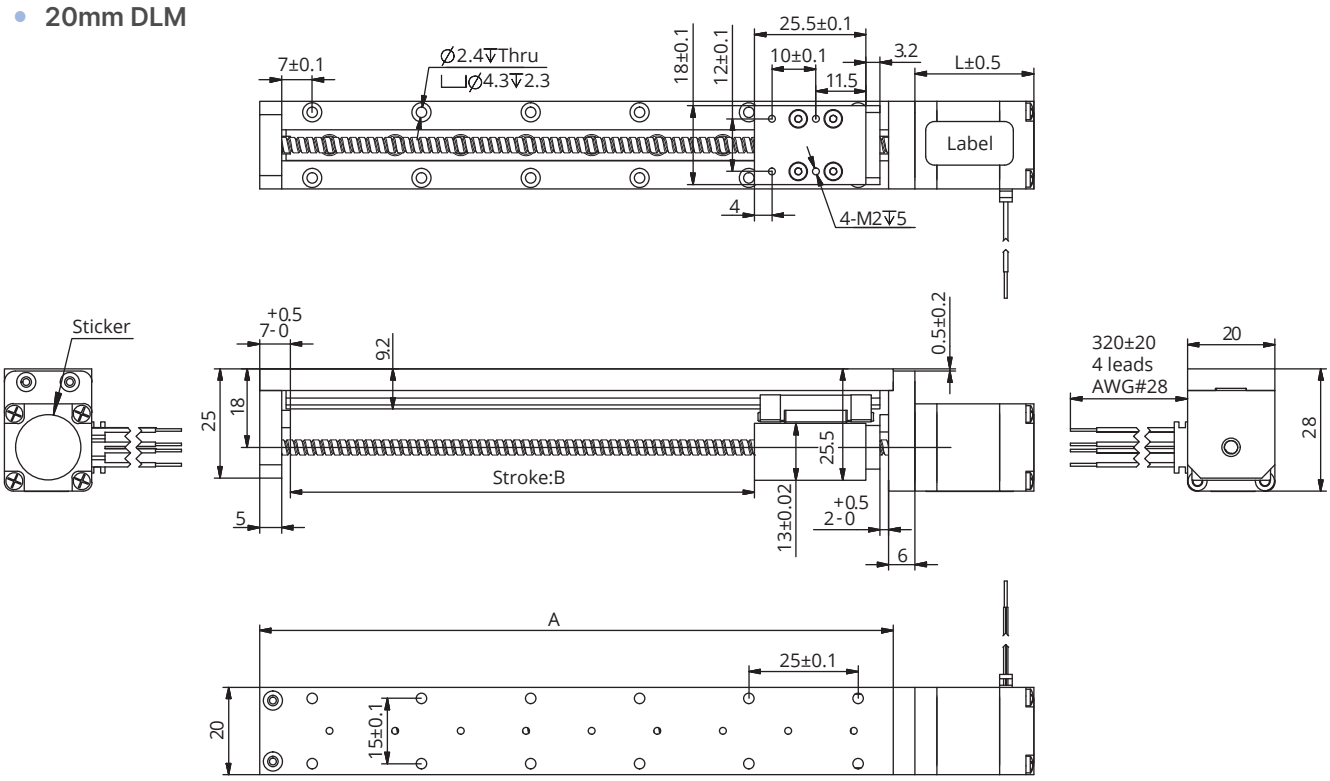

Available Stroke Selection

Size A (mm)	Stroke B (mm)	Weight (kg)	
		Single stack	Double stack
60	20	0.124	0.147
80	40	0.134	0.157
100	60	0.144	0.167
120	80	0.155	0.177
140	100	0.166	0.189
190	150	0.192	0.215
240	200	0.217	0.24

* Weight values are for reference only and may vary with actual configuration.

Note : All drawings are 1st-angle projection - ISO Compliant (3D models available)

Size 20mm DLM / LR-DLM

20mm LR-DLM

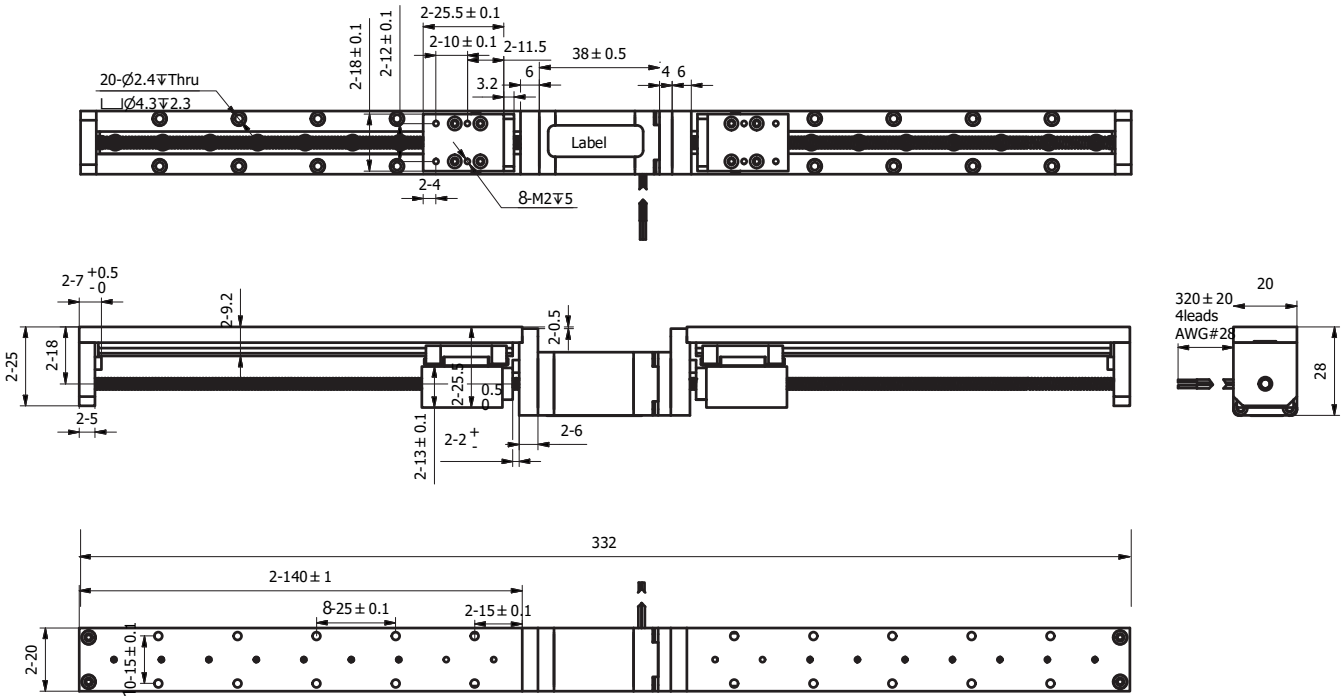

Available Stroke Selection

Stroke (mm)	Single stack		Double stack	
	Total Length (mm)	Weight (kg)	Total Length (mm)	Weight (kg)
20	161.2	0.154	172.1	0.177
40	201.2	0.174	212.1	0.197
60	241.2	0.194	252.1	0.217
80	281.2	0.214	292.1	0.237
100	321.2	0.234	332.1	0.257
150	421.2	0.284	432.1	0.307
200	521.2	0.334	532.1	0.357

Note : All drawings are 1st-angle projection - ISO Compliant (3D models available)

Size 20mm DLM / LR-DLM

Speed Thrust Curves

Size 8 Single Stack Speed Thrust Curves

kg ※Bipolar chopper constant current drive operating current 0.5A (RMS) (Recommended Load Limit 4.5kg)

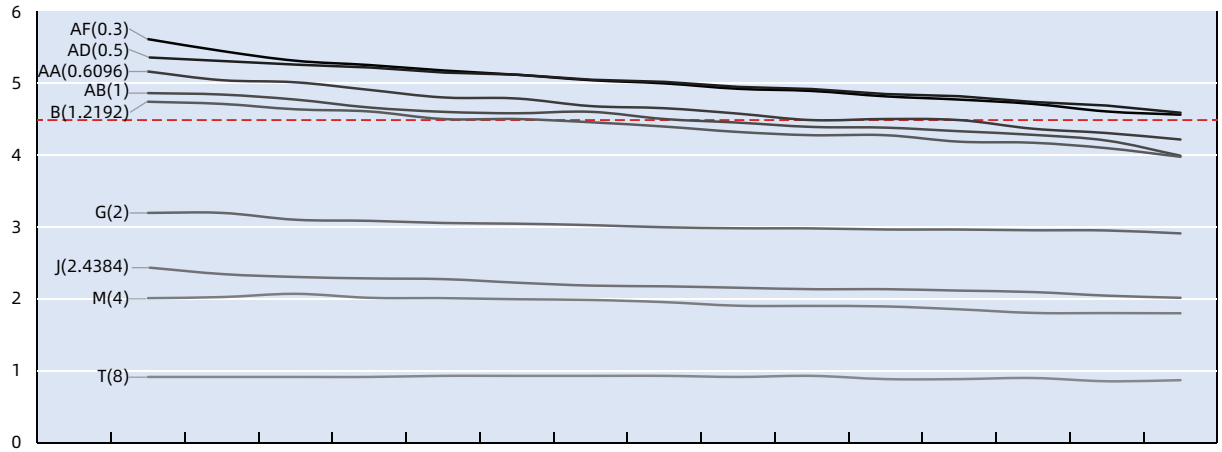

T(mm/s)	4	8	12	16	24	32	40	48	64	80	96	120	144	160	200
AD(mm/s)	0.25	0.5	0.75	1	1.5	2	2.5	3	4	5	6	7.5	9	10	12.5
M(mm/s)	2	4	6	8	12	16	20	24	32	40	48	60	72	80	100
G(mm/s)	1	2	3	4	6	8	10	12	16	20	24	30	36	40	50
J(mm/s)	1.22	2.44	3.66	4.88	7.32	9.75	12.19	14.63	19.51	24.38	29.26	36.58	43.89	48.77	60.96
B(mm/s)	0.6	1.2	1.8	2.4	3.7	4.9	6.1	7.3	9.8	12.2	14.6	18.3	22	24.4	30.5
AB(mm/s)	0.5	1	1.5	2	3	4	5	6	8	10	12	15	18	20	25
AA(mm/s)	0.3	0.6	0.9	1.2	1.8	2.4	3.1	3.7	4.9	6.1	7.3	9.1	11	12.2	15.2
AF(mm/s)	0.15	0.3	0.45	0.6	0.9	1.2	1.5	1.8	2.4	3	3.6	4.5	5.4	6	7.5
speed r/min	30	60	90	120	180	240	300	360	480	600	720	900	1080	1200	1500
pulse pps	100	200	300	400	600	800	1000	1200	1600	2000	2400	3000	3600	4000	5000

Size 8 Double Stack Speed Thrust Curves

kg ※Bipolar chopper constant current drive operating current 0.5A (RMS) (Recommended Load Limit 4.5kg)

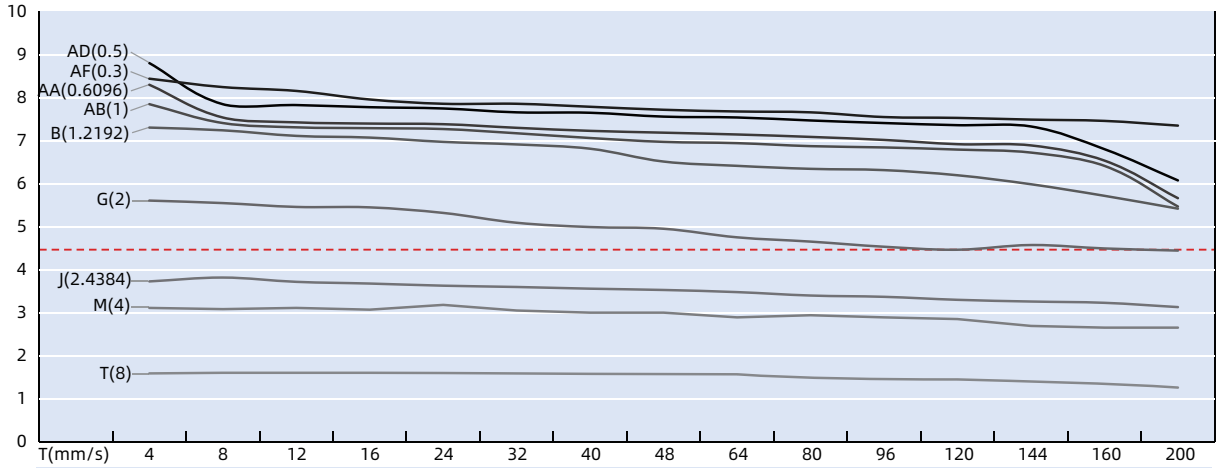

T(mm/s)	4	8	12	16	24	32	40	48	64	80	96	120	144	160	200
AD(mm/s)	0.25	0.5	0.75	1	1.5	2	2.5	3	4	5	6	7.5	9	10	12.5
M(mm/s)	2	4	6	8	12	16	20	24	32	40	48	60	72	80	100
G(mm/s)	1	2	3	4	6	8	10	12	16	20	24	30	36	40	50
J(mm/s)	1.22	2.44	3.66	4.88	7.32	9.75	12.19	14.63	19.51	24.38	29.26	36.58	43.89	48.77	60.96
B(mm/s)	0.6	1.2	1.8	2.4	3.7	4.9	6.1	7.3	9.8	12.2	14.6	18.3	22	24.4	30.5
AB(mm/s)	0.5	1	1.5	2	3	4	5	6	8	10	12	15	18	20	25
AA(mm/s)	0.3	0.6	0.9	1.2	1.8	2.4	3.1	3.7	4.9	6.1	7.3	9.1	11	12.2	15.2
AF(mm/s)	0.15	0.3	0.45	0.6	0.9	1.2	1.5	1.8	2.4	3	3.6	4.5	5.4	6	7.5
Speed r/min	30	60	90	120	180	240	300	360	480	600	720	900	1080	1200	1500
Pulse pps	100	200	300	400	600	800	1000	1200	1600	2000	2400	3000	3600	4000	5000

TEST CONDITION

Testing Voltage: 24Vdc, Driver Model: DS-OLS2-FPD bipolar, chopper driver at rated current (rms).
Motor thrust may vary depending on voltage and driver conditions. 50% thrust margin is recommended.

Size 28mm DLM / LR-DLM

Based on DINGS' high-precision lead screw linear actuator platform and self-developed compact linear module structure, the DLM and LR-DLM 28mm series provide compact, reliable, and high-precision linear motion solutions.

The DLM and LR-DLM 28mm series offer a wide range of stroke and lead options with extensive customization capabilities, enabling integrated customized solutions for various applications.

Motor Characteristics

Motor	Voltage (V)	Current (A [RMS])	Resistance (Ω)	Inductance (mH)	Lead wires	Motor length (mm)
11E2105	4.55	0.5	9.1	6.0	4	33.35
11E2110	2.1	1.0	2.1	1.5	4	33.35
11E2209	3.9	0.95	4.1	4.0	4	45
11E2216	2.4	1.6	1.5	1.3	4	45

Available Lead Screw and Travel per Step

Screw Dia. (inch)	Screw Dia. (mm)	Lead (inch)	Lead (mm)	Lead Code	Travel Per Step @1.8° (mm)*
0.188	4.77	0.0125	0.3175	AL	0.0016
0.188	4.77	0.025	0.635	A	0.003175
0.188	4.77	0.05	1.27	D*	0.00635
0.188	4.77	0.0625	1.5875	F	0.0079
0.188	4.77	0.1	2.54	K	0.0127
0.188	4.77	0.192	4.8768	Q	0.0244
0.188	4.77	0.2	5.08	R	0.0254
0.188	4.77	0.4	10.16	X	0.0508

* Lead code D is only available for LR-DLM 28mm

Mechanical Specifications

Model	C100B(dyn)(N)	Co(stat)(N)	Mro(Nm)	Mpo(Nm)	Myo(Nm)
DLM / LR-DLM 28	714	1071	3.794	2.219	2.219

Size 28mm DLM / LR-DLM

Dimensional Drawings

28mm DLM

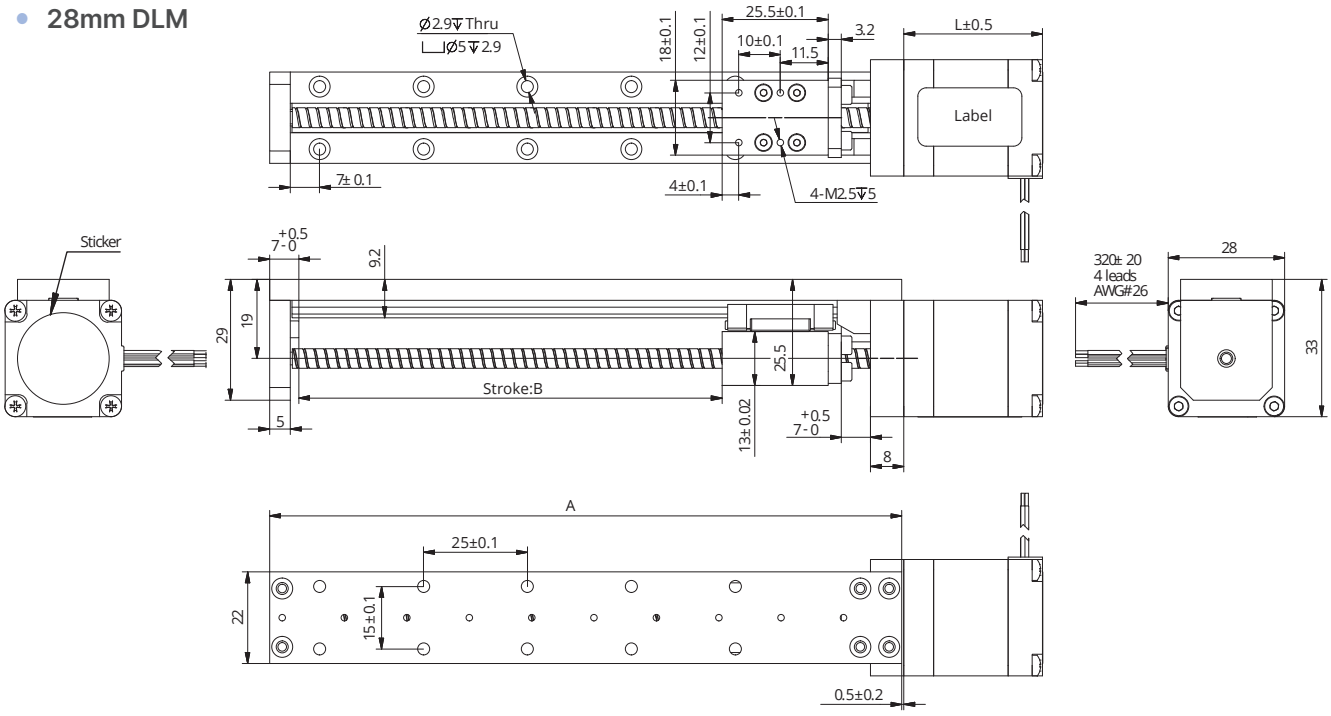

Available Stroke Selection

Size A (mm)	Stroke B (mm)	Weight (kg)	
		Single stack	Double stack
72	20	0.200	0.256
92	40	0.214	0.270
112	60	0.222	0.278
132	80	0.235	0.291
152	100	0.247	0.303
202	150	0.273	0.330
252	200	0.310	0.366
302	250	0.342	0.398
352	300	0.373	0.429

* Weight values are for reference only and may vary with actual configuration.

Note : All drawings are 1st-angle projection - ISO Compliant (3D models available)

Size 28mm DLM / LR-DLM

28mm LR-DLM

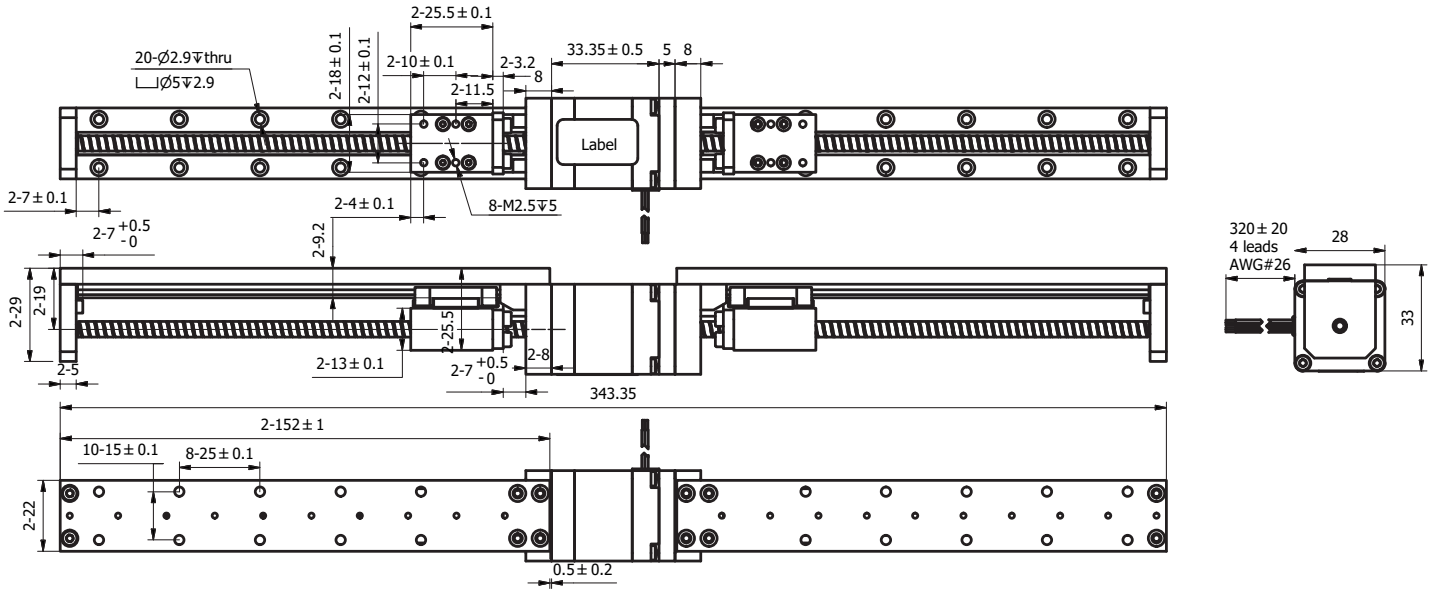

Available Stroke Selection

Stroke (mm)	Single stack		Double stack	
	Total Length (mm)	Weight (kg)	Total Length (mm)	Weight (kg)
20	183.35	0.293	195	0.349
40	223.35	0.319	235	0.375
60	263.35	0.345	275	0.401
80	303.35	0.371	315	0.427
100	343.35	0.397	355	0.453
150	443.35	0.462	455	0.518
200	543.35	0.527	555	0.583
250	643.35	0.592	655	0.648
300	743.35	0.657	755	0.713

Note : All drawings are 1st-angle projection - ISO Compliant (3D models available)

Size 28mm DLM / LR-DLM

Speed Thrust Curves

Size 11 Single Stack Speed Thrust Curves

※Bipolar chopper constant current drive operating current 1A (RMS) (Recommended Load Limit 14kg)

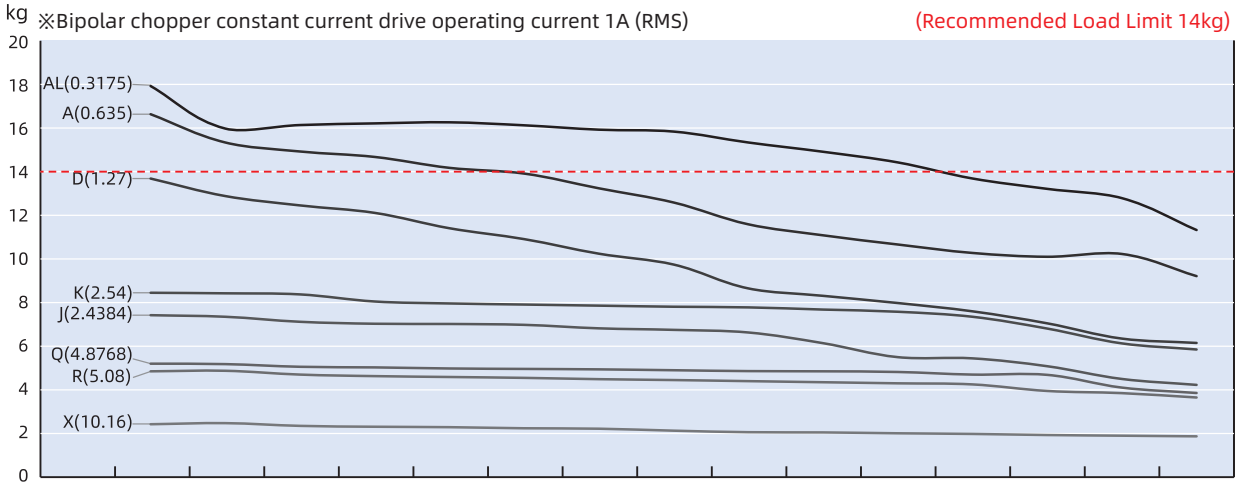

X (mm/s)	5.08	10.16	15.24	20.32	30.48	40.64	50.8	60.96	81.28	101.6	121.92	152.4	182.88	203.2	254
R (mm/s)	2.54	5.08	7.62	10.16	15.24	20.32	25.4	30.48	40.64	50.8	60.96	76.2	91.44	101.6	127
Q (mm/s)	2.44	4.88	7.32	9.75	14.63	19.51	24.38	29.26	39.01	48.77	58.52	73.15	87.78	97.54	121.92
K (mm/s)	1.27	2.54	3.81	5.08	7.62	10.16	12.7	15.24	20.32	25.4	30.48	38.1	45.72	50.8	63.5
J (mm/s)	1.22	2.44	3.66	4.88	7.32	9.75	12.19	14.63	19.51	24.38	29.26	36.58	43.89	48.77	60.96
D (mm/s)	0.64	1.27	1.91	2.54	3.81	5.08	6.35	7.62	10.16	12.7	15.24	19.05	22.86	25.4	31.75
A (mm/s)	0.32	0.64	0.95	1.27	1.91	2.54	3.18	3.81	5.08	6.35	7.62	9.53	11.43	12.7	15.88
AL (mm/s)	0.15	0.3	0.45	0.6	0.9	1.2	1.5	1.8	2.4	3	3.6	4.5	5.4	6	7.5
Speed r/min	30	60	90	120	180	240	300	360	480	600	720	900	1080	1200	1500
Pulse pps	100	200	300	400	600	800	1000	1200	1600	2000	2400	3000	3600	4000	5000

Size 11 Double Stack Speed Thrust Curves

※Bipolar chopper constant current drive operating current 1.6A (RMS) (Recommended Load Limit 14kg)

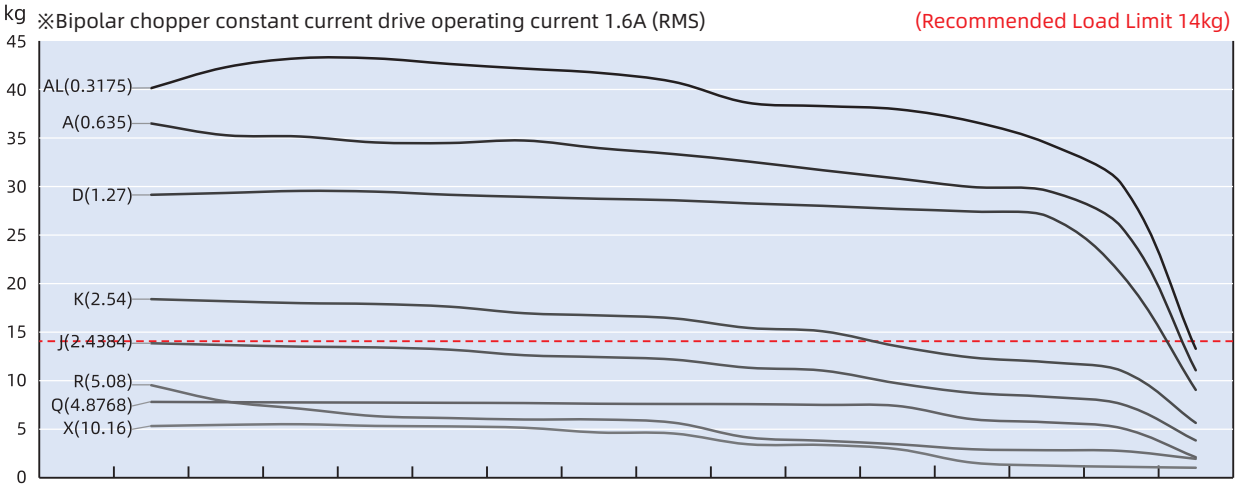

X (mm/s)	5.08	10.16	15.24	20.32	30.48	40.64	50.8	60.96	81.28	101.6	121.92	152.4	182.88	203.2	254
R (mm/s)	2.54	5.08	7.62	10.16	15.24	20.32	25.4	30.48	40.64	50.8	60.96	76.2	91.44	101.6	127
Q (mm/s)	2.44	4.88	7.32	9.75	14.63	19.51	24.38	29.26	39.01	48.77	58.52	73.15	87.78	97.54	121.92
K (mm/s)	1.27	2.54	3.81	5.08	7.62	10.16	12.7	15.24	20.32	25.4	30.48	38.1	45.72	50.8	63.5
J (mm/s)	1.22	2.44	3.66	4.88	7.32	9.75	12.19	14.63	19.51	24.38	29.26	36.58	43.89	48.77	60.96
D (mm/s)	0.64	1.27	1.91	2.54	3.81	5.08	6.35	7.62	10.16	12.7	15.24	19.05	22.86	25.4	31.75
A (mm/s)	0.32	0.64	0.95	1.27	1.91	2.54	3.18	3.81	5.08	6.35	7.62	9.53	11.43	12.7	15.88
AL (mm/s)	0.15	0.3	0.45	0.6	0.9	1.2	1.5	1.8	2.4	3	3.6	4.5	5.4	6	7.5
Speed r/min	30	60	90	120	180	240	300	360	480	600	720	900	1080	1200	1500
Pulse pps	100	200	300	400	600	800	1000	1200	1600	2000	2400	3000	3600	4000	5000

TEST CONDITION

Testing Voltage: 24Vdc, Driver Model: DS-OLS2-FPD bipolar, chopper driver at rated current (rms).
Motor thrust may vary depending on voltage and driver conditions. 50% thrust margin is recommended.

Size 35mm DLM / LR-DLM

Based on DINGS' high-precision lead screw linear actuator platform and self-developed compact linear module structure, the DLM and LR-DLM 35mm series provide compact, reliable, and high-precision linear motion solutions.

The DLM and LR-DLM 35mm series offer a wide range of stroke and lead options with extensive customization capabilities, enabling integrated customized solutions for various applications.

Motor Characteristics

Motor	Voltage (V)	Current (A [RMS])	Resistance (Ω)	Inductance (mH)	Lead wires	Motor length (mm)
14E2105	6.6	0.5	13.2	14	4	33.6
14E2110	3.5	1.0	3.5	3.6	4	33.6
14E2115	2.7	1.5	1.8	1.9	4	33.6
14E2205	12.0	0.5	24.0	29	4	45.6
14E2210	6.0	1.0	6.0	7.2	4	45.6
14E2215	4.0	1.5	2.7	3.2	4	45.6

Available Lead Screw and Travel per Step

Screw Dia. (inch)	Screw Dia. (mm)	Lead (inch)	Lead (mm)	Lead Code	Travel Per Step @1.8° (mm)*
0.25	6.35	0.024	0.6096	AA	0.003048
0.25	6.35	0.0394	1	AB	0.005
0.25	6.35	0.025	0.635	A	0.003175
0.25	6.35	0.048	1.2192	B	0.006096
0.25	6.35	0.05	1.27	D	0.00635
0.25	6.35	0.0625	1.5875	F*	0.0079
0.25	6.35	0.096	2.4384	J	0.0122
0.25	6.35	0.1	2.54	K	0.0127
0.25	6.35	0.125	3.175	L	0.0159
0.25	6.35	0.192	4.8768	Q	0.024
0.25	6.35	0.2	5.08	R	0.0254
0.25	6.35	0.25	6.35	S	0.0318
0.25	6.35	0.333	8.4667	U	0.0423
0.25	6.35	0.384	9.7536	W	0.0488
0.25	6.35	0.5	12.7	Y	0.0635
0.25	6.35	1	25.4	Z	0.127
0.315	8	0.1575	4	M	0.02
0.315	8	0.315	8	T	0.04
0.315	8	0.0787	2	G	0.01
0.315	8	0.3937	10	C	0.05

* Lead code F is only available for LR-DLM 35mm

Size 35mm DLM / LR-DLM

Mechanical Specifications

Model	C100B(dyn)(N)	Co(stat)(N)	Mro(Nm)	Mpo(Nm)	Myo(Nm)
DLM / LR-DLM 35	1379	1820	8.288	5.733	5.733

Dimensional Drawings

35mm DLM

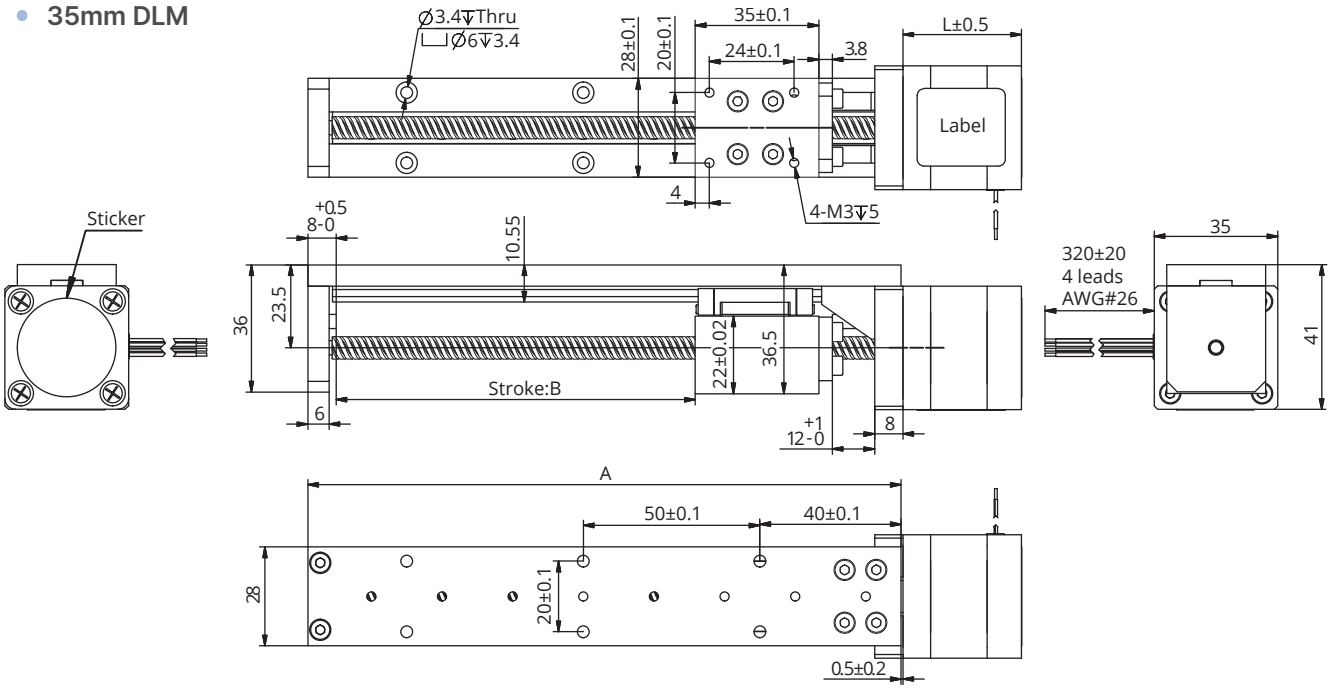

Available Stroke Selection

Size A (mm)	Stroke B (mm)	Weight (kg)	
		Single stack	Double stack
118	50	0.434	0.456
168	100	0.457	0.501
218	150	0.525	0.546
268	200	0.570	0.591
318	250	0.615	0.636
368	300	0.660	0.691
418	350	0.705	0.726
468	400	0.751	0.772
518	450	0.796	0.817
568	500	0.841	0.862

* Weight values are for reference only and may vary with actual configuration.

Note : All drawings are 1st-angle projection - ISO Compliant (3D models available)

Size 35mm DLM / LR-DLM

35mm LR-DLM

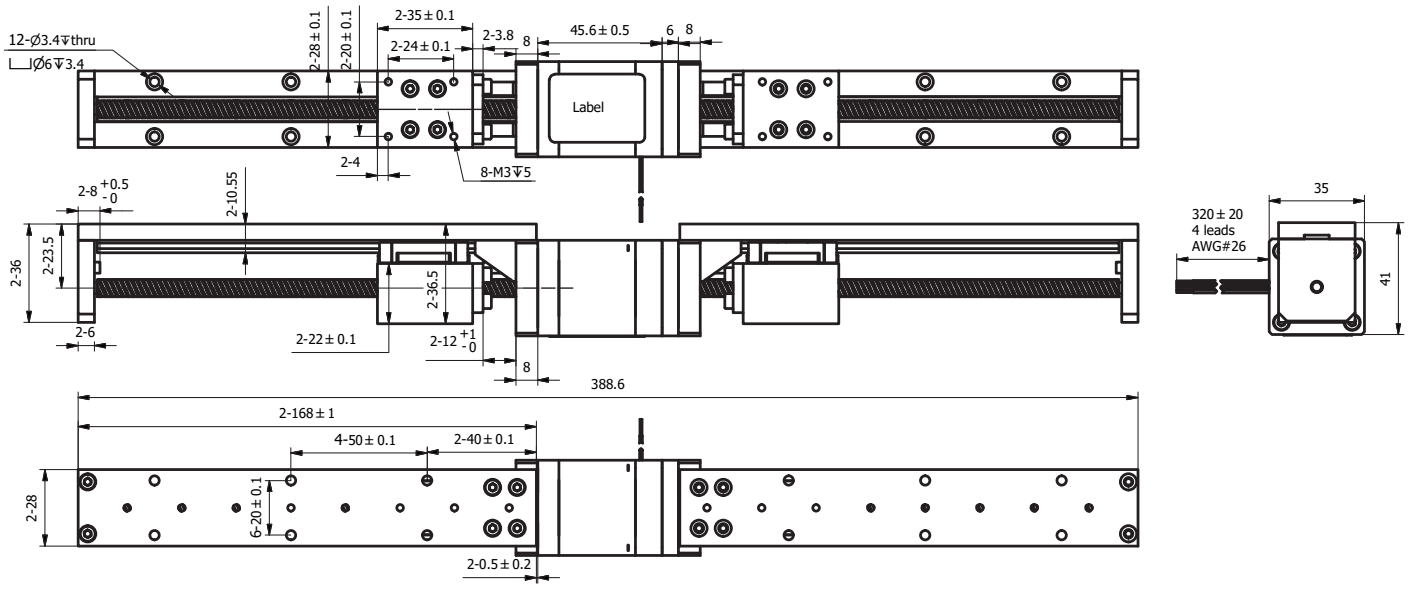

Available Stroke Selection

Stroke (mm)	Single stack		Double stack	
	Total Length (mm)	Weight (kg)	Total Length (mm)	Weight (kg)
50	276.6	0.55	288.6	0.571
100	376.6	0.643	388.6	0.664
150	476.6	0.736	488.6	0.757
200	576.6	0.829	588.6	0.85
250	676.6	0.922	688.6	0.943
300	776.6	1.015	788.6	1.036
350	876.6	1.108	888.6	1.129
400	976.6	1.201	988.6	1.222

Note : All drawings are 1st-angle projection - ISO Compliant (3D models available)

Size 35mm DLM / LR-DLM

Speed Thrust Curves

Size 14 Single Stack Speed Thrust Curves

※Bipolar chopper constant current drive, operating current 1.5A (RMS), screw diameter 6.35mm (Recommended Load Limit 23.5kg)

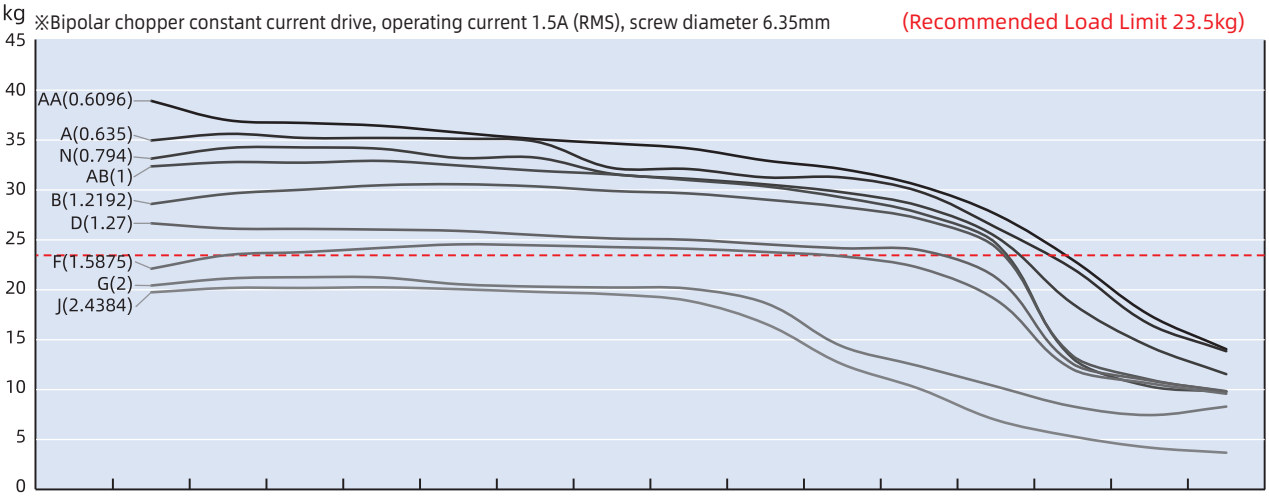

J (mm/s)	1.22	2.44	3.66	4.88	7.32	9.75	12.19	14.63	19.51	24.38	29.26	36.58	43.89	48.77	60.96
G (mm/s)	1	2	3	4	6	8	10	12	16	20	24	30	36	40	50
F (mm/s)	0.79	1.59	2.38	3.18	4.76	6.35	7.94	9.53	12.7	15.88	19.05	23.81	28.58	31.75	39.69
D (mm/s)	0.64	1.27	1.91	2.54	3.81	5.08	6.35	7.62	10.16	12.7	15.24	19.05	22.86	25.4	31.75
B (mm/s)	0.61	1.22	1.83	2.44	3.66	4.88	6.1	7.32	9.75	12.19	14.63	18.29	21.95	24.38	30.48
AB (mm/s)	0.5	1	1.5	2	3	4	5	6	8	10	12	15	18	20	25
N (mm/s)	0.4	0.79	1.19	1.59	2.38	3.18	3.97	4.76	6.35	7.94	9.53	11.91	14.29	15.88	19.85
A (mm/s)	0.32	0.64	0.95	1.27	1.91	2.54	3.18	3.81	5.08	6.35	7.62	9.53	11.43	12.7	15.88
AA (mm/s)	0.3	0.61	0.91	1.22	1.83	2.44	3.05	3.66	4.88	6.1	7.32	9.14	10.97	12.19	15.24
Speed r/min	30	60	90	120	180	240	300	360	480	600	720	900	1080	1200	1500
Pulse pps	100	200	300	400	600	800	1000	1200	1600	2000	2400	3000	3600	4000	5000

Size 14 Single Stack Speed Thrust Curves

※Bipolar chopper constant current drive, operating current 1.5A (RMS), screw diameter 6.35mm (Recommended Load Limit 23.5kg)

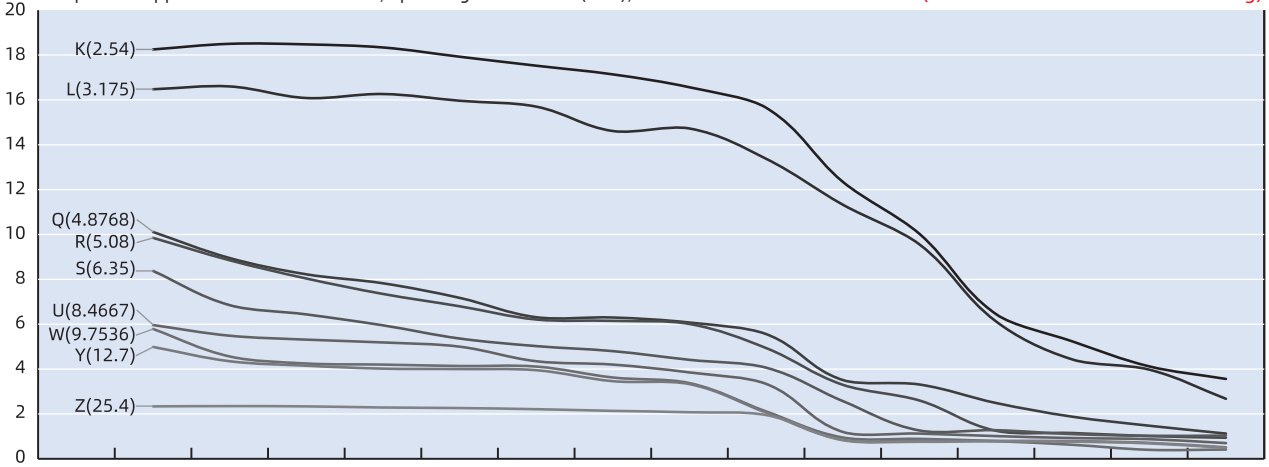

Z (mm/s)	12.7	25.4	38.1	50.8	76.2	101.6	127	152.4	203.2	254	304.8	381	457.2	508	635
Y (mm/s)	6.35	12.7	19.05	25.4	38.1	50.8	63.5	76.2	101.6	127	152.4	190.5	228.6	254	317.5
W (mm/s)	4.88	9.75	14.63	19.51	29.26	39.01	48.77	58.52	78.03	97.54	117.04	146.3	175.56	195.07	243.84
U (mm/s)	4.23	8.47	12.7	16.93	25.4	33.87	42.33	50.8	67.73	84.67	101.6	127	152.4	169.33	211.67
S (mm/s)	3.18	6.35	9.53	12.7	19.05	25.4	31.75	38.1	50.8	63.5	76.2	95.25	114.3	127	158.75
R (mm/s)	2.54	5.08	7.62	10.16	15.24	20.32	25.4	30.48	40.64	50.8	60.96	76.2	91.44	101.6	127
Q (mm/s)	2.44	4.88	7.32	9.75	14.63	19.51	24.38	29.26	39.01	48.77	58.52	73.15	87.78	97.54	121.92
L (mm/s)	1.59	3.18	4.76	6.35	9.53	12.7	15.88	19.05	25.4	31.75	38.1	47.63	57.15	63.5	79.38
K (mm/s)	1.27	2.54	3.81	5.08	7.62	10.16	12.7	15.24	20.32	25.4	30.48	38.1	45.72	50.8	63.5
Speed r/min	30	60	90	120	180	240	300	360	480	600	720	900	1080	1200	1500
Pulse pps	100	200	300	400	600	800	1000	1200	1600	2000	2400	3000	3600	4000	5000

TEST CONDITION

Testing Voltage: 24Vdc, Driver Model: DS-OLS2-FPD bipolar, chopper driver at rated current (rms).
Motor thrust may vary depending on voltage and driver conditions. 50% thrust margin is recommended.

Size 35mm DLM / LR-DLM

Size 14 Single Stack Speed Thrust Curves

※Bipolar chopper constant current drive, operating current 1.5A (RMS), screw diameter 6&8mm (Recommended Load Limit 23.5kg)

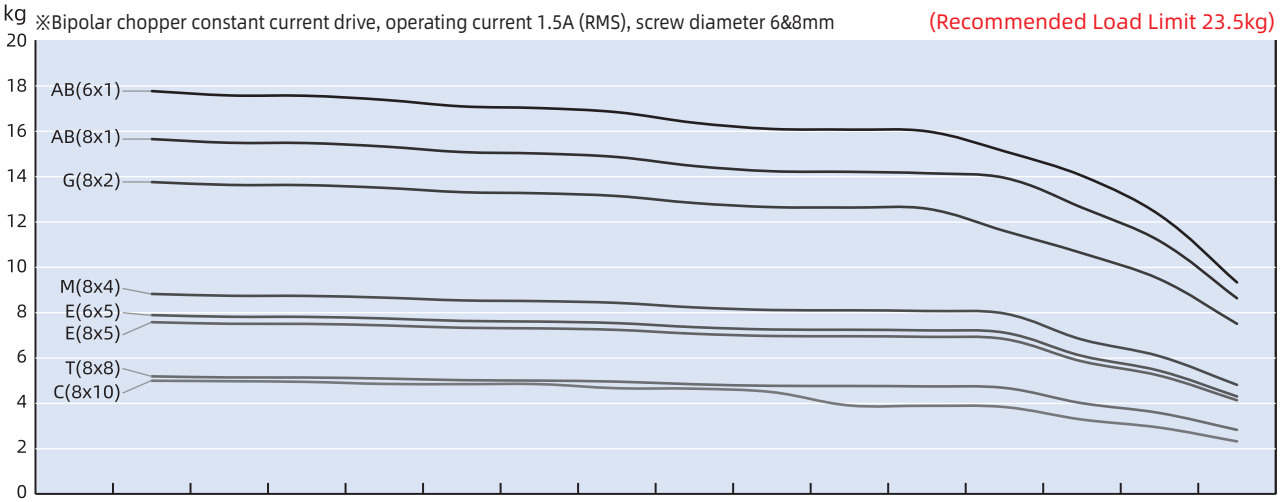

C (mm/s)	5	10	15	20	30	40	50	60	80	100	120	150	180	200	250
T (mm/s)	4	8	12	16	24	32	40	48	64	80	96	120	144	160	200
E (mm/s)	2.5	5	7.5	10	15	20	25	30	40	50	60	75	90	100	125
M (mm/s)	2	4	6	8	12	16	20	24	32	40	48	60	72	80	100
G (mm/s)	1	2	3	4	6	8	10	12	16	20	24	30	36	40	50
AB (mm/s)	0.5	1	1.5	2	3	4	5	6	8	10	12	15	18	20	25
Speed r/min	30	60	90	120	180	240	300	360	480	600	720	900	1080	1200	1500
Pulse pps	100	200	300	400	600	800	1000	1200	1600	2000	2400	3000	3600	4000	5000

Size 14 Double Stack Speed Thrust Curves

※Bipolar chopper constant current drive, operating current 1.5A (RMS), screw diameter 6.35mm (Recommended Load Limit 23.5kg)

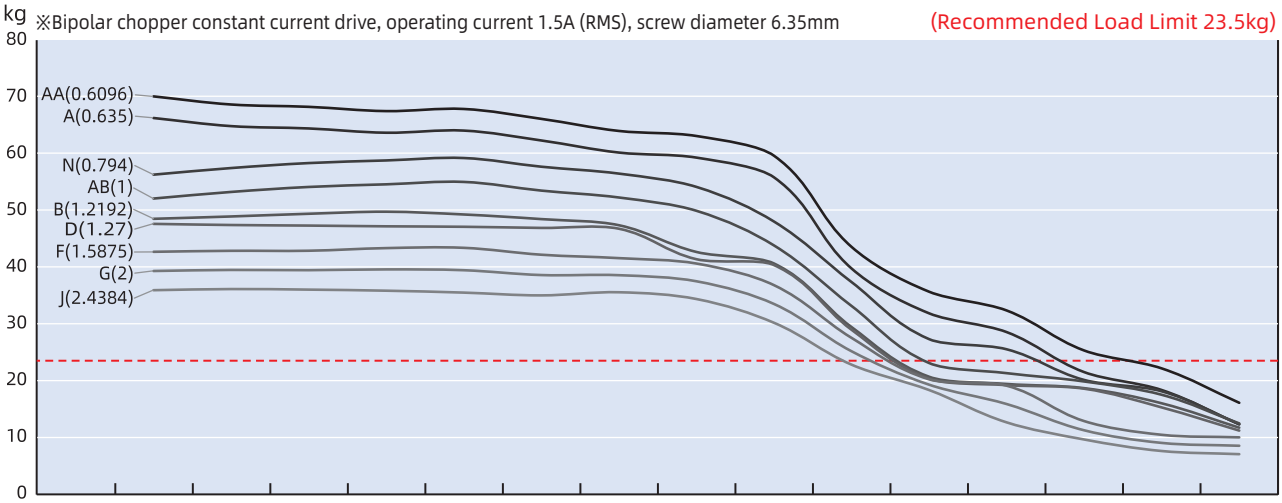

J (mm/s)	1.22	2.44	3.66	4.88	7.32	9.75	12.19	14.63	19.51	24.38	29.26	36.58	43.89	48.77	60.96
G (mm/s)	1	2	3	4	6	8	10	12	16	20	24	30	36	40	50
F (mm/s)	0.79	1.59	2.38	3.18	4.76	6.35	7.94	9.53	12.7	15.88	19.05	23.81	28.58	31.75	39.69
D (mm/s)	0.64	1.27	1.91	2.54	3.81	5.08	6.35	7.62	10.16	12.7	15.24	19.05	22.86	25.4	31.75
B (mm/s)	0.61	1.22	1.83	2.44	3.66	4.88	6.1	7.32	9.75	12.19	14.63	18.29	21.95	24.38	30.48
AB (mm/s)	0.5	1	1.5	2	3	4	5	6	8	10	12	15	18	20	25
N (mm/s)	0.4	0.79	1.19	1.59	2.38	3.18	3.97	4.76	6.35	7.94	9.53	11.91	14.29	15.88	19.85
A (mm/s)	0.32	0.64	0.95	1.27	1.91	2.54	3.18	3.81	5.08	6.35	7.62	9.53	11.43	12.7	15.88
AA (mm/s)	0.3	0.61	0.91	1.22	1.83	2.44	3.05	3.66	4.88	6.1	7.32	9.14	10.97	12.19	15.24
Speed r/min	30	60	90	120	180	240	300	360	480	600	720	900	1080	1200	1500
Pulse pps	100	200	300	400	600	800	1000	1200	1600	2000	2400	3000	3600	4000	5000

TEST CONDITION

Testing Voltage: 24Vdc, Driver Model: DS-OLS2-FPD bipolar, chopper driver at rated current (rms).
Motor thrust may vary depending on voltage and driver conditions. 50% thrust margin is recommended.

Size 35mm DLM / LR-DLM

Size 14 Double Stack Speed Thrust Curves

※Bipolar chopper constant current drive, operating current 1.5A (RMS), screw diameter 6.35mm (Recommended Load Limit 23.5kg)

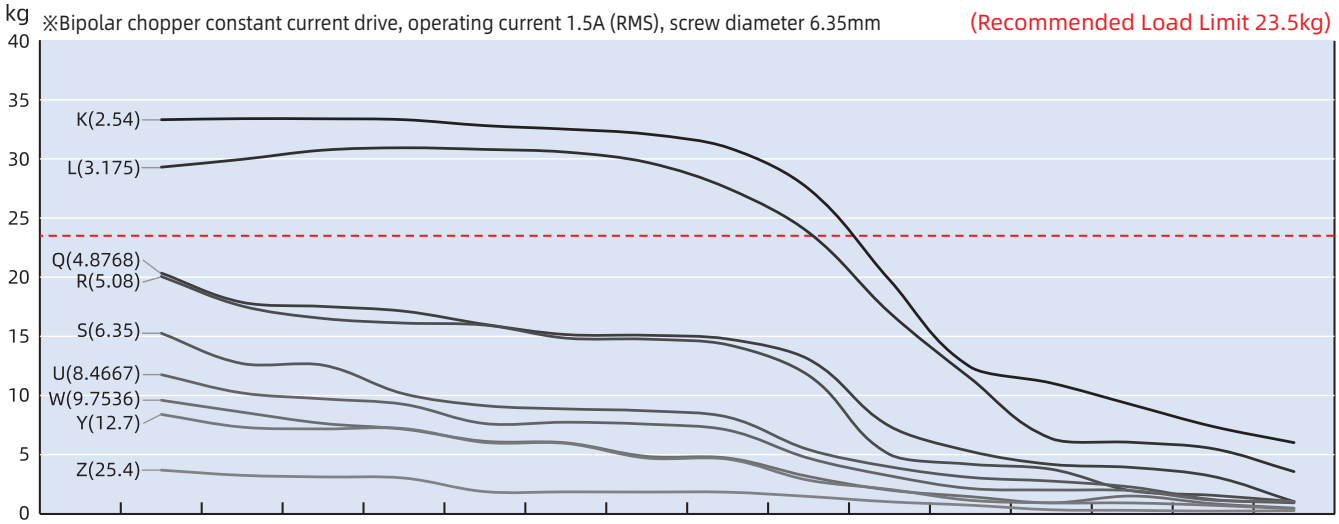

Z (mm/s)	12.7	25.4	38.1	50.8	76.2	101.6	127	152.4	203.2	254	304.8	381	457.2	508	635
Y (mm/s)	6.35	12.7	19.05	25.4	38.1	50.8	63.5	76.2	101.6	127	152.4	190.5	228.6	254	317.5
W (mm/s)	4.88	9.75	14.63	19.51	29.26	39.01	48.77	58.52	78.03	97.54	117.04	146.3	175.56	195.07	243.84
U (mm/s)	4.23	8.47	12.7	16.93	25.4	33.87	42.33	50.8	67.73	84.67	101.6	127	152.4	169.33	211.67
S (mm/s)	3.175	6.35	9.525	12.7	19.05	25.4	31.75	38.1	50.8	63.5	76.2	95.25	114.3	127	158.75
R (mm/s)	2.54	5.08	7.62	10.16	15.24	20.32	25.4	30.48	40.64	50.8	60.96	76.2	91.44	101.6	127
Q (mm/s)	2.44	4.88	7.32	9.75	14.63	19.51	24.38	29.26	39.01	48.77	58.52	73.15	87.78	97.54	121.92
L (mm/s)	1.59	3.18	4.76	6.35	9.53	12.7	15.88	19.05	25.4	31.75	38.1	47.63	57.15	63.5	79.38
K (mm/s)	1.27	2.54	3.81	5.08	7.62	10.16	12.7	15.24	20.32	25.4	30.48	38.1	45.72	50.8	63.5
Speed r/min	30	60	90	120	180	240	300	360	480	600	720	900	1080	1200	1500
Pulse pps	100	200	300	400	600	800	1000	1200	1600	2000	2400	3000	3600	4000	5000

Size 14 Double Stack Speed Thrust Curves

※Bipolar chopper constant current drive, operating current 1.5A (RMS), screw diameter 6&8mm (Recommended Load Limit 23.5kg)

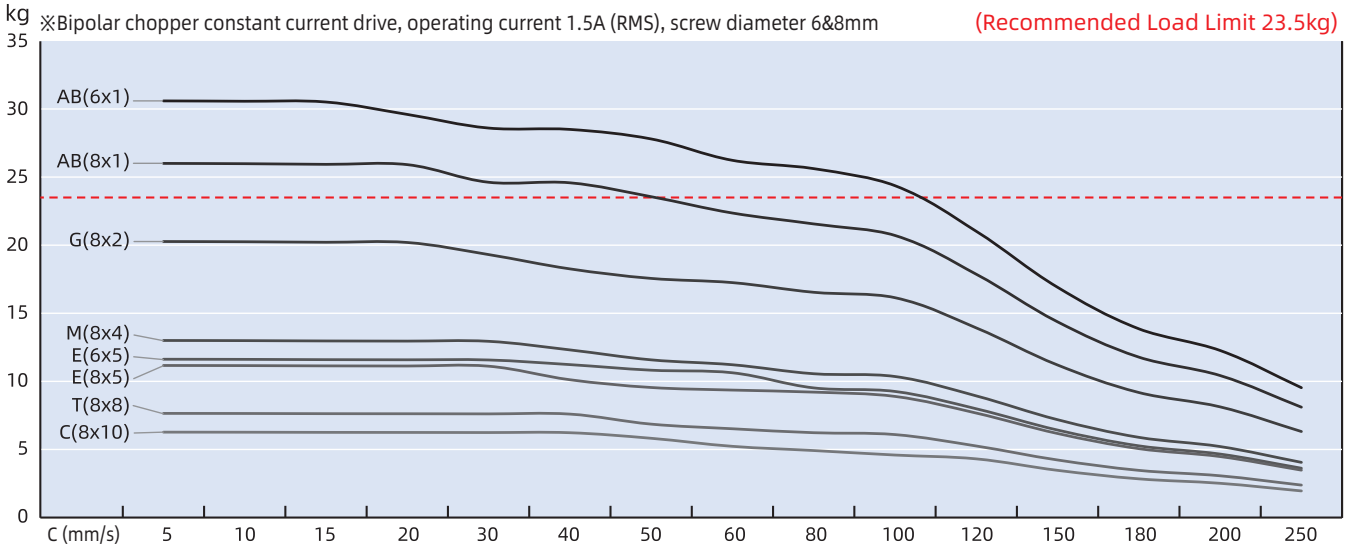

C (mm/s)	5	10	15	20	30	40	50	60	80	100	120	150	180	200	250
T (mm/s)	4	8	12	16	24	32	40	48	64	80	96	120	144	160	200
E (mm/s)	2.5	5	7.5	10	15	20	25	30	40	50	60	75	90	100	125
M (mm/s)	2	4	6	8	12	16	20	24	32	40	48	60	72	80	100
G (mm/s)	1	2	3	4	6	8	10	12	16	20	24	30	36	40	50
AB (mm/s)	0.5	1	1.5	2	3	4	5	6	8	10	12	15	18	20	25
Speed r/min	30	60	90	120	180	240	300	360	480	600	720	900	1080	1200	1500
Pulse pps	100	200	300	400	600	800	1000	1200	1600	2000	2400	3000	3600	4000	5000

TEST CONDITION

Testing Voltage: 24Vdc, Driver Model: DS-OLS2-FPD bipolar, chopper driver at rated current (rms).
Motor thrust may vary depending on voltage and driver conditions. 50% thrust margin is recommended.

Size 42mm DLM / LR-DLM

Based on DINGS' high-precision lead screw linear actuator platform and self-developed compact linear module structure, the DLM and LR-DLM 42mm series provide compact, reliable, and high-precision linear motion solutions.

The DLM and LR-DLM 42mm series offer a wide range of stroke and lead options with extensive customization capabilities, enabling integrated customized solutions for various applications.

Motor Characteristics

Motor	Voltage (V)	Current (A [RMS])	Resistance (Ω)	Inductance (mH)	Lead wires	Motor length (mm)
17E2105	7.2	0.5	14.4	19.8	4	34.1
17E2110	3.8	1.0	3.8	5.0	4	34.1
17E2115	2.85	1.5	1.9	2.2	4	34.1
17E2205	11.0	0.5	22	46	4	48.1
17E2212	4.5	1.2	3.8	8.0	4	48.1
17E2225	2.5	2.5	1.0	1.8	4	48.1

Available Lead Screw and Travel per Step

Screw Dia. (inch)	Screw Dia. (mm)	Lead (inch)	Lead (mm)	Lead Code	Travel Per Step @1.8° (mm)*
0.25	6.35	0.024	0.6096	AA	0.003048
0.25	6.35	0.0394	1	AB	0.005
0.25	6.35	0.025	0.635	A	0.003175
0.25	6.35	0.048	1.2192	B	0.006096
0.25	6.35	0.05	1.27	D	0.00635
0.25	6.35	0.0625	1.5875	F*	0.0079
0.25	6.35	0.096	2.4384	J	0.0122
0.25	6.35	0.1	2.54	K	0.0127
0.25	6.35	0.125	3.175	L	0.0159
0.25	6.35	0.192	4.8768	Q	0.024
0.25	6.35	0.2	5.08	R	0.0254
0.25	6.35	0.25	6.35	S	0.0318
0.25	6.35	0.333	8.4667	U	0.0423
0.25	6.35	0.384	9.7536	W	0.0488
0.25	6.35	0.5	12.7	Y	0.0635
0.25	6.35	1	25.4	Z	0.127
0.315	8	0.1575	4	M	0.02
0.315	8	0.315	8	T	0.04
0.315	8	0.0787	2	G	0.01
0.315	8	0.3937	10	C	0.05

* Lead code F is only available for LR-DLM 42mm

Size 42mm DLM / LR-DLM

Mechanical Specifications

Model	C100B(dyn)(N)	Co(stat)(N)	Mro(Nm)	Mpo(Nm)	Myo(Nm)
DLM / LR-DLM 42	2128	2702	16.541	8.799	8.799

Dimensional Drawings

- **42mm DLM**

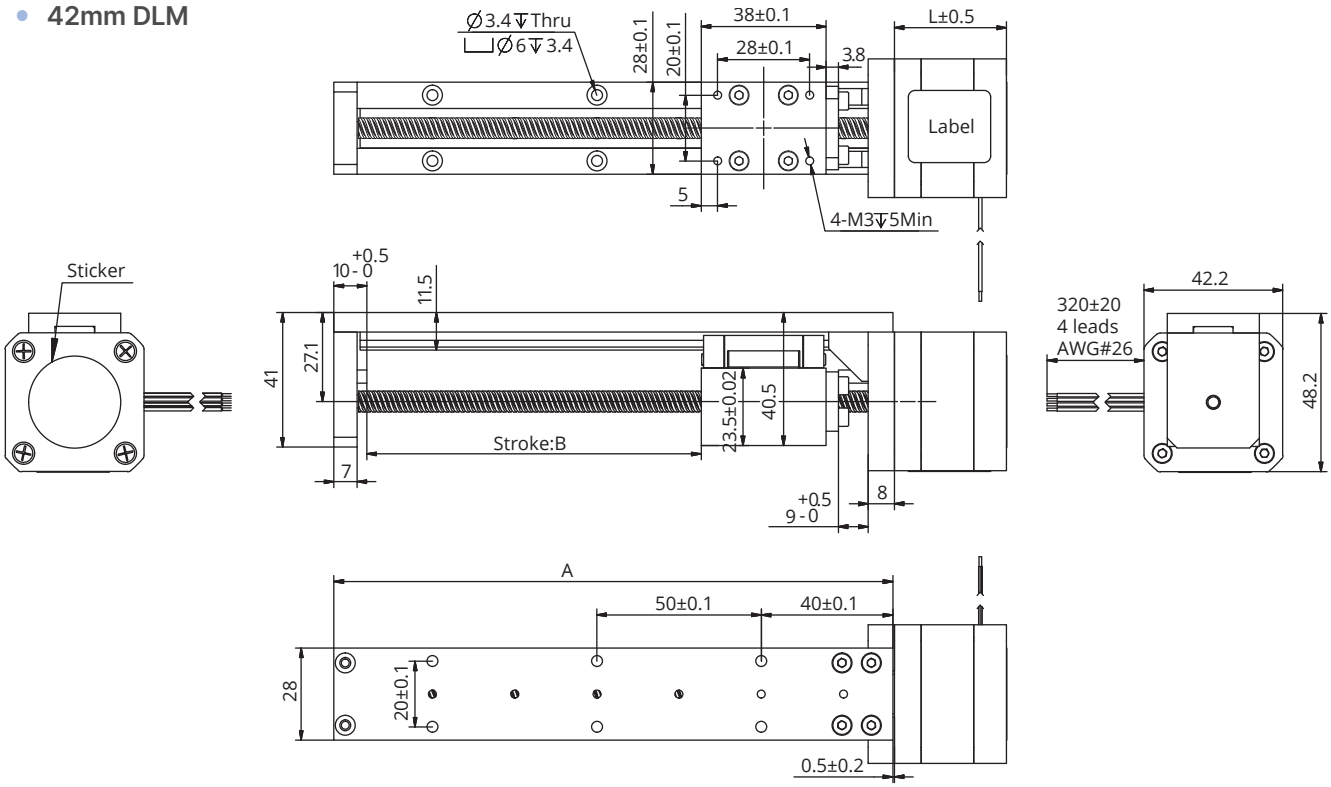

- **Available Stroke Selection**

Size A (mm)	Stroke B (mm)	Weight (kg)	
		Single stack	Double stack
120	50	0.508	0.658
170	100	0.568	0.700
220	150	0.628	0.805
270	200	0.688	0.820
320	250	0.748	0.910
370	300	0.808	0.940
420	350	0.868	1.000
470	400	0.928	1.060
520	450	0.988	1.120
570	500	1.048	1.180

* Weight values are for reference only and may vary with actual configuration.

Note : All drawings are 1st-angle projection - ISO Compliant (3D models available)

Size 42mm DLM / LR-DLM

42mm LR-DLM

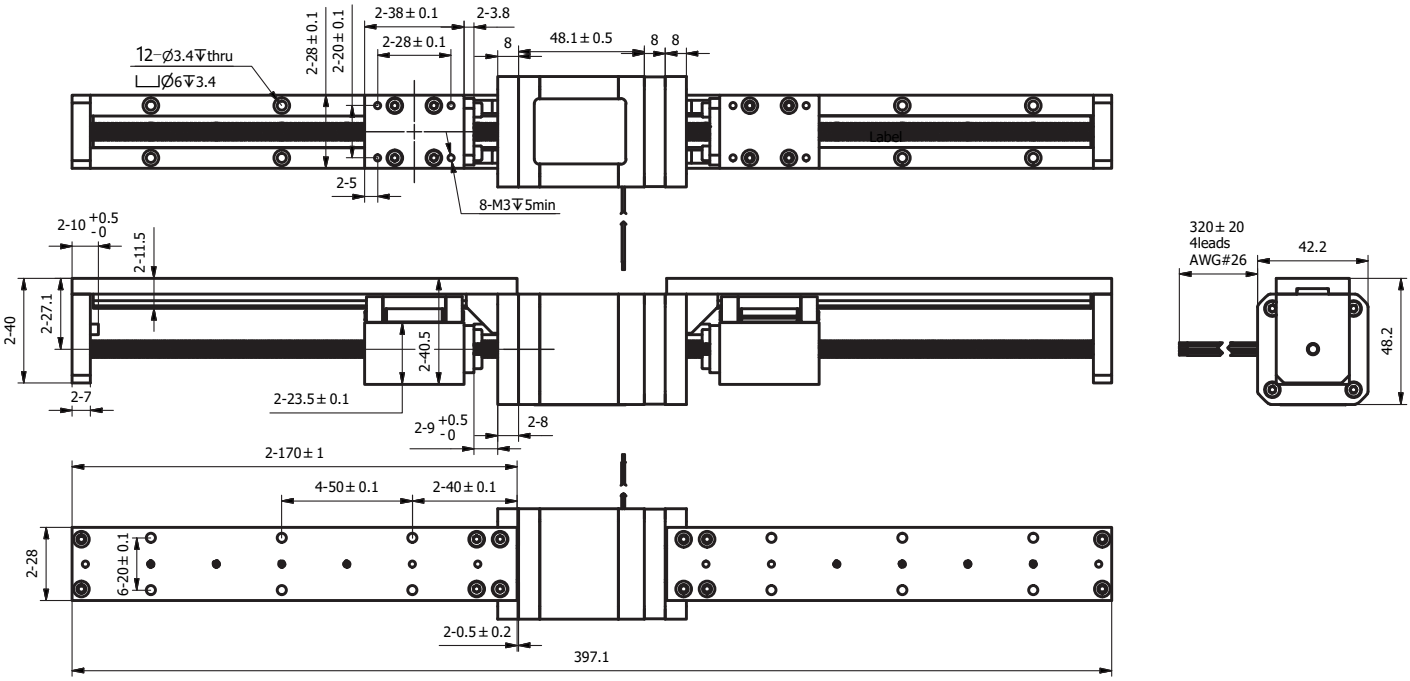

Available Stroke Selection

Stroke (mm)	Single stack		Double stack	
	Total Length (mm)	Weight (kg)	Total Length (mm)	Weight (kg)
50	283.1	0.808	297.1	0.940
100	383.1	0.899	397.1	1.031
150	483.1	0.990	497.1	1.122
200	583.1	1.082	597.1	1.214
250	683.1	1.172	697.1	1.304
300	783.1	1.263	797.1	1.395
350	883.1	1.354	897.1	1.486
400	983.1	1.445	997.1	1.577

Note : All drawings are 1st-angle projection - ISO Compliant (3D models available)

Size 42mm DLM / LR-DLM

Speed Thrust Curves

Size 17 Single Stack Speed Thrust Curves

※Bipolar chopper constant current drive, operating current 1.5A (RMS), screw diameter 6.35mm (Recommended Load Limit 23.5kg)

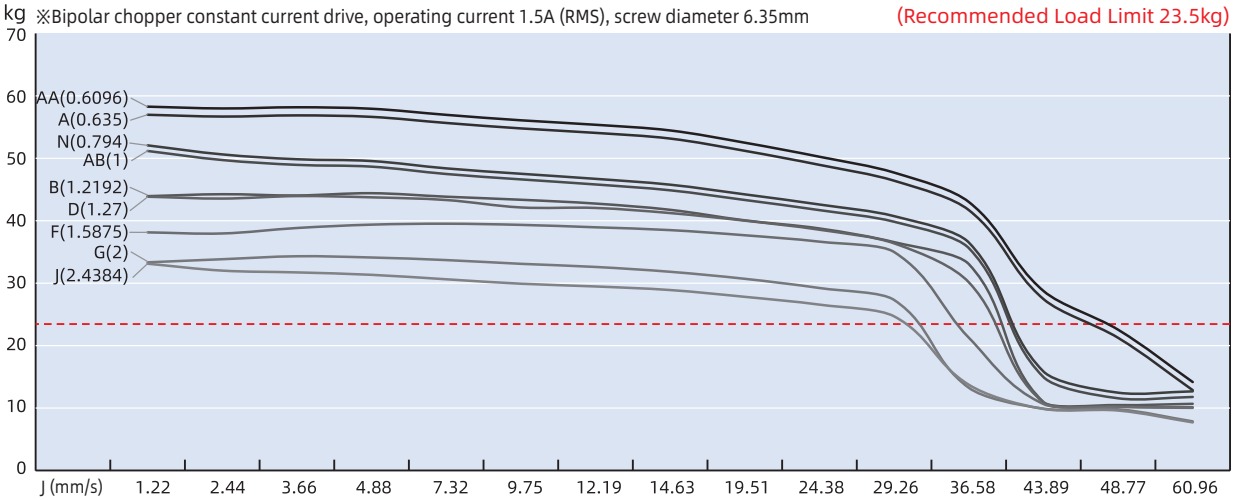

J (mm/s)	1.22	2.44	3.66	4.88	7.32	9.75	12.19	14.63	19.51	24.38	29.26	36.58	43.89	48.77	60.96
G (mm/s)	1	2	3	4	6	8	10	12	16	20	24	30	36	40	50
F (mm/s)	0.79	1.59	2.38	3.18	4.76	6.35	7.94	9.53	12.7	15.88	19.05	23.81	28.58	31.75	39.69
D (mm/s)	0.64	1.27	1.91	2.54	3.81	5.08	6.35	7.62	10.16	12.7	15.24	19.05	22.86	25.4	31.75
B (mm/s)	0.61	1.22	1.83	2.44	3.66	4.88	6.1	7.32	9.75	12.19	14.63	18.29	21.95	24.38	30.48
AB (mm/s)	0.5	1	1.5	2	3	4	5	6	8	10	12	15	18	20	25
N (mm/s)	0.4	0.79	1.19	1.59	2.38	3.18	3.97	4.76	6.35	7.94	9.53	11.91	14.29	15.88	19.85
A (mm/s)	0.32	0.64	0.95	1.27	1.91	2.54	3.18	3.81	5.08	6.35	7.62	9.53	11.43	12.7	15.88
AA (mm/s)	0.3	0.61	0.91	1.22	1.83	2.44	3.05	3.66	4.88	6.1	7.32	9.14	10.97	12.19	15.24
Speed r/min	30	60	90	120	180	240	300	360	480	600	720	900	1080	1200	1500
Pulse pps	100	200	300	400	600	800	1000	1200	1600	2000	2400	3000	3600	4000	5000

Size 17 Single Stack Speed Thrust Curves

※Bipolar chopper constant current drive, operating current 1.5A (RMS), screw diameter 6.35mm (Recommended Load Limit 23.5kg)

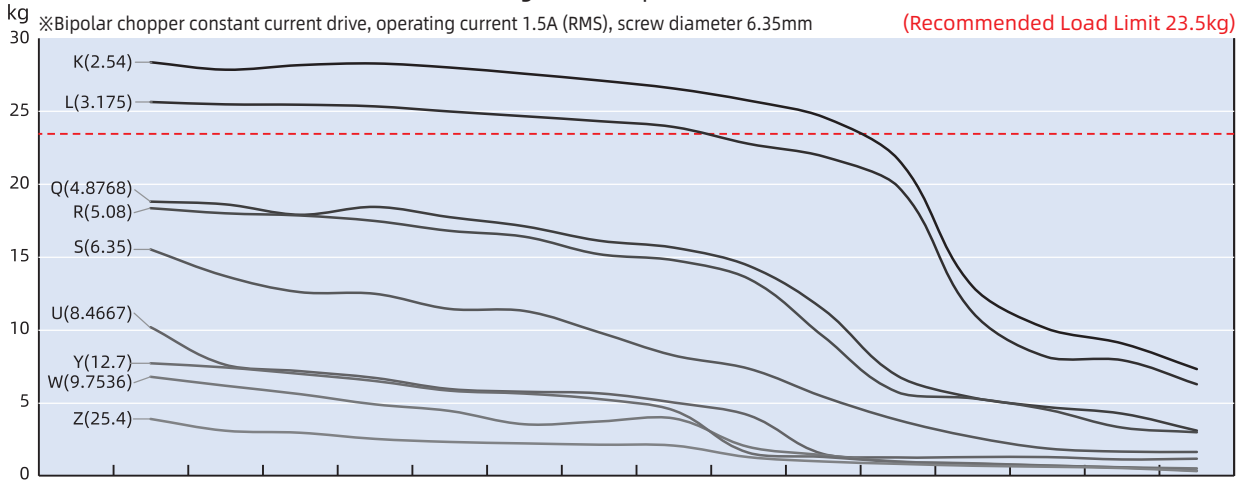

Z (mm/s)	12.7	25.4	38.1	50.8	76.2	101.6	127	152.4	203.2	254	304.8	381	457.2	508	635
Y (mm/s)	6.35	12.7	19.05	25.4	38.1	50.8	63.5	76.2	101.6	127	152.4	190.5	228.6	254	317.5
W (mm/s)	4.88	9.75	14.63	19.51	29.26	39.01	48.77	58.52	78.03	97.54	117.04	146.3	175.56	195.07	243.84
U (mm/s)	4.23	8.47	12.7	16.93	25.4	33.87	42.33	50.8	67.73	84.67	101.6	127	152.4	169.33	211.67
S (mm/s)	3.18	6.35	9.53	12.7	19.05	25.4	31.75	38.1	50.8	63.5	76.2	95.25	114.3	127	158.75
R (mm/s)	2.54	5.08	7.62	10.16	15.24	20.32	25.4	30.48	40.64	50.8	60.96	76.2	91.44	101.6	127
Q (mm/s)	2.44	4.88	7.32	9.75	14.63	19.51	24.38	29.26	39.01	48.77	58.52	73.15	87.78	97.54	121.92
L (mm/s)	1.59	3.18	4.76	6.35	9.53	12.7	15.88	19.05	25.4	31.75	38.1	47.63	57.15	63.5	79.38
K (mm/s)	1.27	2.54	3.81	5.08	7.62	10.16	12.7	15.24	20.32	25.4	30.48	38.1	45.72	50.8	63.5
Speed r/min	30	60	90	120	180	240	300	360	480	600	720	900	1080	1200	1500
Pulse pps	100	200	300	400	600	800	1000	1200	1600	2000	2400	3000	3600	4000	5000

TEST CONDITION

Testing Voltage: 24Vdc, Driver Model: DS-OLS2-FPD bipolar, chopper driver at rated current (rms).
Motor thrust may vary depending on voltage and driver conditions. 50% thrust margin is recommended.

Size 42mm DLM / LR-DLM

Size 17 Single Stack Speed Thrust Curves

※Bipolar chopper constant current drive, operating current 1.5A (RMS), screw diameter 6&8mm (Recommended Load Limit 23.5kg)

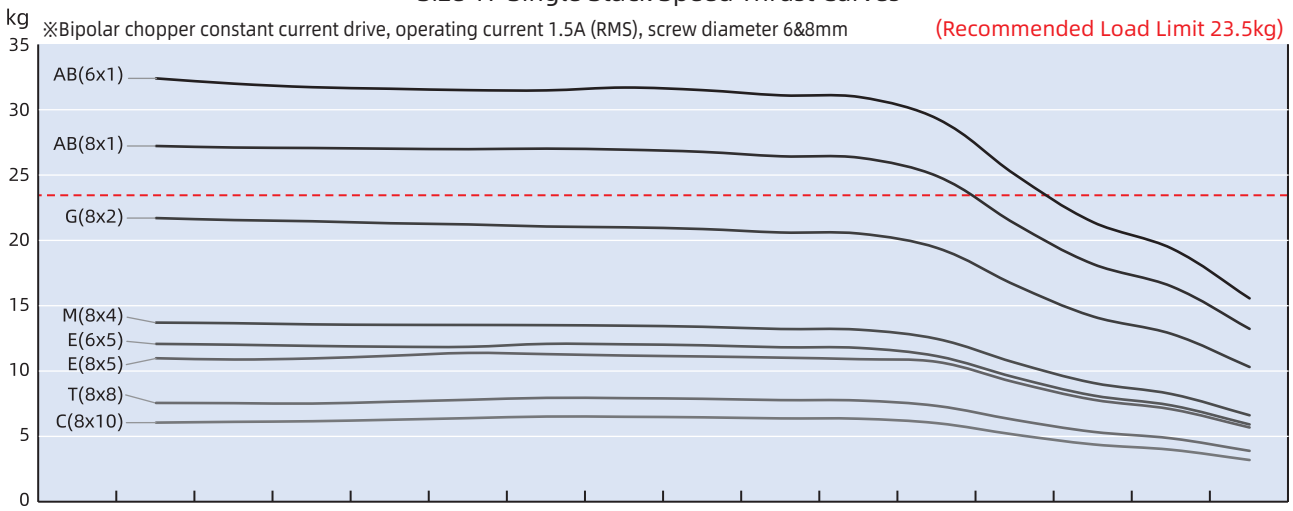

C (mm/s)	5	10	15	20	30	40	50	60	80	100	120	150	180	200	250
T (mm/s)	4	8	12	16	24	32	40	48	64	80	96	120	144	160	200
E (mm/s)	2.5	5	7.5	10	15	20	25	30	40	50	60	75	90	100	125
M (mm/s)	2	4	6	8	12	16	20	24	32	40	48	60	72	80	100
G (mm/s)	1	2	3	4	6	8	10	12	16	20	24	30	36	40	50
AB (mm/s)	0.5	1	1.5	2	3	4	5	6	8	10	12	15	18	20	25
Speed r/min	30	60	90	120	180	240	300	360	480	600	720	900	1080	1200	1500
Pulse pps	100	200	300	400	600	800	1000	1200	1600	2000	2400	3000	3600	4000	5000

Size 17 Double Stack Speed Thrust Curves

※Bipolar chopper constant current drive, operating current 2.5A (RMS), screw diameter 6.35mm (Recommended Load Limit 23.5kg)

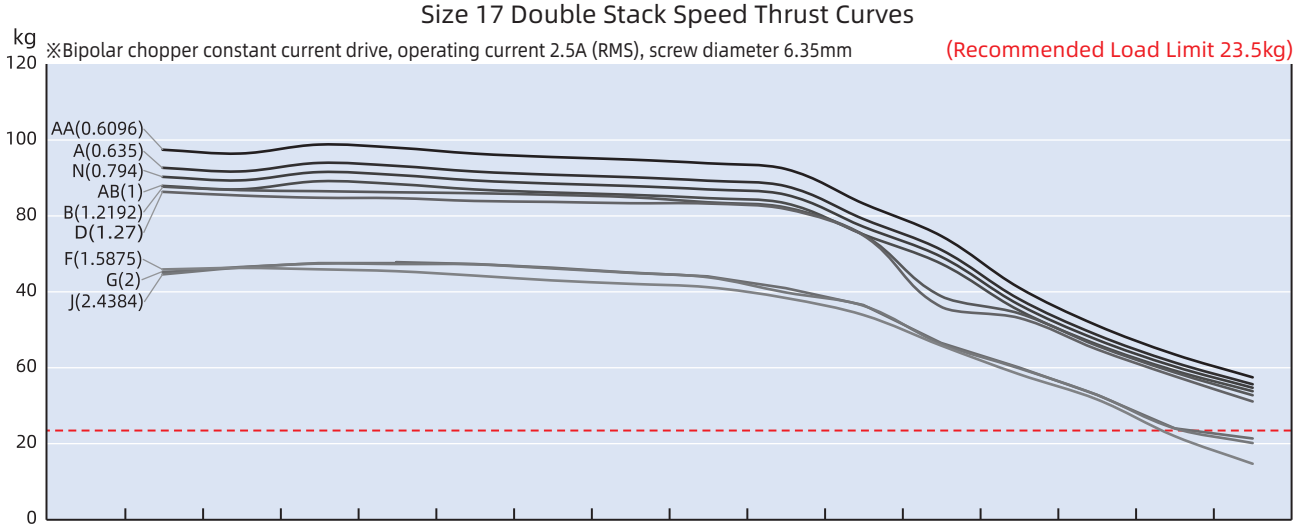

J (mm/s)	1.22	2.44	3.66	4.88	7.32	9.75	12.19	14.63	19.51	24.38	29.26	36.58	43.89	48.77	60.96
G (mm/s)	1	2	3	4	6	8	10	12	16	20	24	30	36	40	50
F (mm/s)	0.79	1.59	2.38	3.18	4.76	6.35	7.94	9.53	12.7	15.88	19.05	23.81	28.58	31.75	39.69
D (mm/s)	0.64	1.27	1.91	2.54	3.81	5.08	6.35	7.62	10.16	12.7	15.24	19.05	22.86	25.4	31.75
B (mm/s)	0.61	1.22	1.83	2.44	3.66	4.88	6.1	7.32	9.75	12.19	14.63	18.29	21.95	24.38	30.48
AB (mm/s)	0.5	1	1.5	2	3	4	5	6	8	10	12	15	18	20	25
N (mm/s)	0.4	0.79	1.19	1.59	2.38	3.18	3.97	4.76	6.35	7.94	9.53	11.91	14.29	15.88	19.85
A (mm/s)	0.32	0.64	0.95	1.27	1.91	2.54	3.18	3.81	5.08	6.35	7.62	9.53	11.43	12.7	15.88
AA (mm/s)	0.3	0.61	0.91	1.22	1.83	2.44	3.05	3.66	4.88	6.1	7.32	9.14	10.97	12.19	15.24
Speed r/min	30	60	90	120	180	240	300	360	480	600	720	900	1080	1200	1500
Pulse pps	100	200	300	400	600	800	1000	1200	1600	2000	2400	3000	3600	4000	5000

TEST CONDITION

Testing Voltage: 24Vdc, Driver Model: DS-OLS2-FPD bipolar, chopper driver at rated current (rms).
Motor thrust may vary depending on voltage and driver conditions. 50% thrust margin is recommended.

Size 42mm DLM / LR-DLM

Size 17 Double Stack Speed Thrust Curves

※Bipolar chopper constant current drive, operating current 2.5A (RMS), screw diameter 6.35mm (Recommended Load Limit 23.5kg)

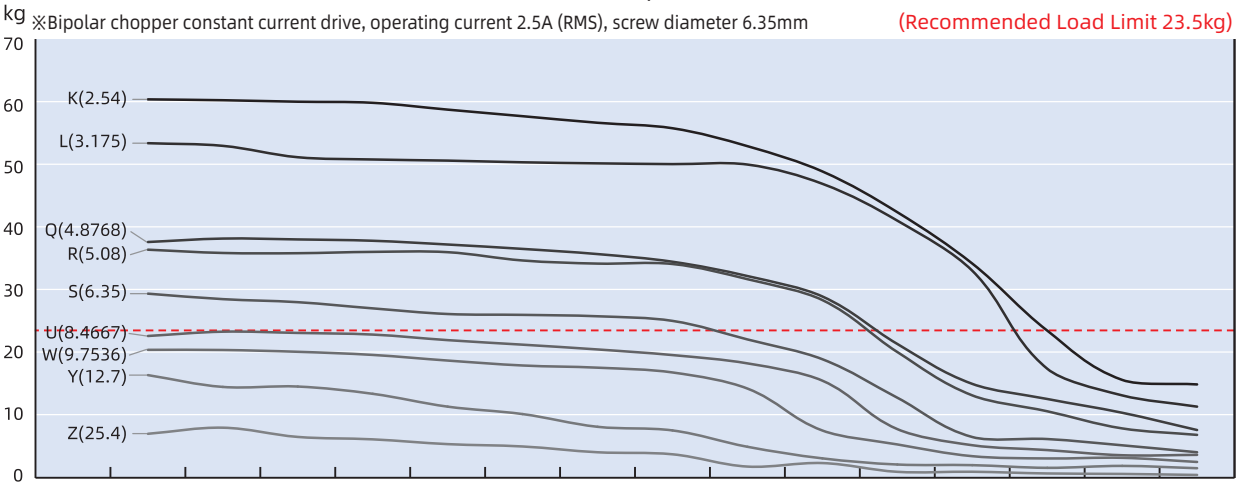

Z (mm/s)	12.7	25.4	38.1	50.8	76.2	101.6	127	152.4	203.2	254	304.8	381	457.2	508	635
Y (mm/s)	6.35	12.7	19.05	25.4	38.1	50.8	63.5	76.2	101.6	127	152.4	190.5	228.6	254	317.5
W (mm/s)	4.88	9.75	14.63	19.51	29.26	39.01	48.77	58.52	78.03	97.54	117.04	146.3	175.56	195.07	243.84
U (mm/s)	4.23	8.47	12.7	16.93	25.4	33.87	42.33	50.8	67.73	84.67	101.6	127	152.4	169.33	211.67
S (mm/s)	3.18	6.35	9.53	12.7	19.05	25.4	31.75	38.1	50.8	63.5	76.2	95.25	114.3	127	158.75
R (mm/s)	2.54	5.08	7.62	10.16	15.24	20.32	25.4	30.48	40.64	50.8	60.96	76.2	91.44	101.6	127
Q (mm/s)	2.44	4.88	7.32	9.75	14.63	19.51	24.38	29.26	39.01	48.77	58.52	73.15	87.78	97.54	121.92
L (mm/s)	1.59	3.18	4.76	6.35	9.53	12.7	15.88	19.05	25.4	31.75	38.1	47.63	57.15	63.5	79.38
K (mm/s)	1.27	2.54	3.81	5.08	7.62	10.16	12.7	15.24	20.32	25.4	30.48	38.1	45.72	50.8	63.5
Speed r/min	30	60	90	120	180	240	300	360	480	600	720	900	1080	1200	1500
Pulse pps	100	200	300	400	600	800	1000	1200	1600	2000	2400	3000	3600	4000	5000

Size 17 Double Stack Speed Thrust Curves

※Bipolar chopper constant current drive, operating current 2.5A (RMS), screw diameter 6&8mm (Recommended Load Limit 23.5kg)

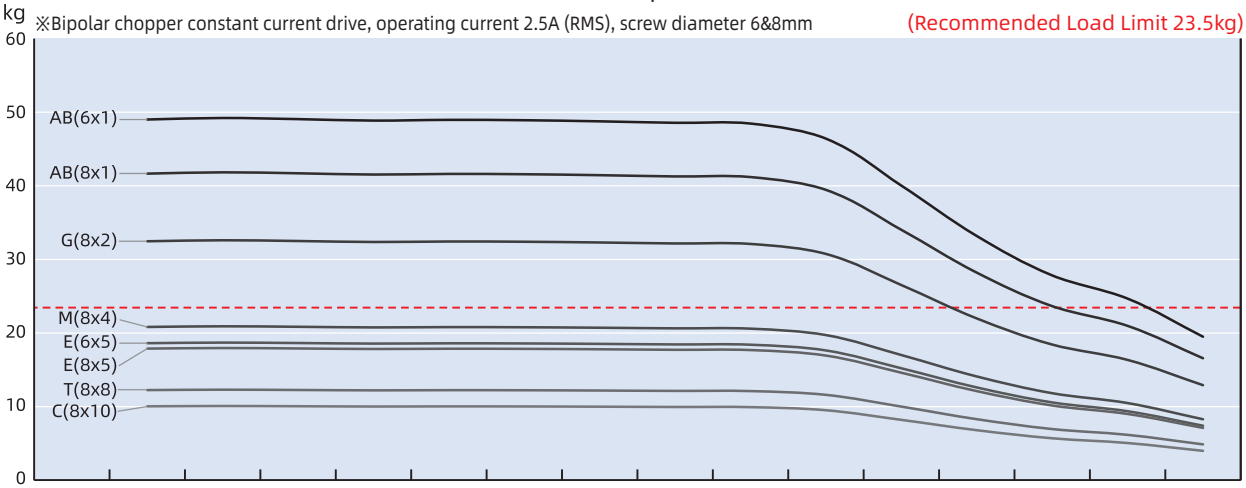

C (mm/s)	5	10	15	20	30	40	50	60	80	100	120	150	180	200	250
T (mm/s)	4	8	12	16	24	32	40	48	64	80	96	120	144	160	200
E (mm/s)	2.5	5	7.5	10	15	20	25	30	40	50	60	75	90	100	125
M (mm/s)	2	4	6	8	12	16	20	24	32	40	48	60	72	80	100
G (mm/s)	1	2	3	4	6	8	10	12	16	20	24	30	36	40	50
AB (mm/s)	0.5	1	1.5	2	3	4	5	6	8	10	12	15	18	20	25
Speed r/min	30	60	90	120	180	240	300	360	480	600	720	900	1080	1200	1500
Pulse pps	100	200	300	400	600	800	1000	1200	1600	2000	2400	3000	3600	4000	5000

TEST CONDITION

Testing Voltage: 24Vdc, Driver Model: DS-OLS2-FPD bipolar, chopper driver at rated current (rms).
Motor thrust may vary depending on voltage and driver conditions. 50% thrust margin is recommended.

Size 57mm DLM / LR-DLM

Based on DINGS' high-precision lead screw linear actuator platform and self-developed compact linear module structure, the DLM and LR-DLM 57mm series provide compact, reliable, and high-precision linear motion solutions.

The DLM and LR-DLM 57mm series offer a wide range of stroke and lead options with extensive customization capabilities, enabling integrated customized solutions for various applications.

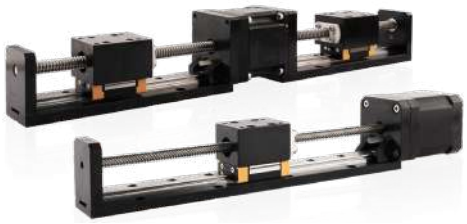

Motor Characteristics

Motor	Voltage (V)	Current (A [RMS])	Resistance (Ω)	Inductance (mH)	Lead wires	Motor length (mm)
23E2110	6.4	1.0	6.4	16.4	4	45
23E2120	3.2	2.0	1.75	4.1	4	45
23E2130	2.4	3.0	0.8	1.7	4	45
23E2210	10.8	1.0	11.5	32	4	65
23E2225	4.2	2.5	2.0	5.2	4	65
23E2240	2.8	4.0	0.7	2.0	4	65

Available Lead Screw and Travel per Step

Screw Dia. (inch)	Screw Dia. (mm)	Lead (inch)	Lead (mm)	Lead Code	Travel Per Step @1.8° (mm)*
0.375	9.525	0.025	0.635	A	0.0032
0.375	9.525	0.05	1.27	D	0.0064
0.375	9.525	0.0625	1.5875	F	0.0079
0.375	9.525	0.083	2.1167	H	0.0106
0.375	9.525	0.1	2.54	K*	0.0127
0.375	9.525	0.125	3.175	L	0.0159
0.375	9.525	0.167	4.233	P	0.0212
0.375	9.525	0.2	5.08	R	0.0254
0.375	9.525	0.25	6.35	S	0.0318
0.375	9.525	0.375	9.525	V	0.0476
0.375	9.525	0.384	9.7536	W	0.0488
0.375	9.525	0.4	10.16	X	0.0508
0.375	9.525	0.5	12.7	Y	0.0635
0.375	9.525	1	25.4	Z	0.127
0.394	10	0.0787	2	G	0.01
0.394	10	0.3937	10	C	0.05
0.394	10	0.7874	20	I	0.1

* Lead code K is only available for LR-DLM 57mm

Size 57mm DLM / LR-DLM

Mechanical Specifications

Model	C100B(dyn)(N)	Co(stat)(N)	Mro(Nm)	Mpo(Nm)	Myo(Nm)
DLM / LR-DLM 57	2989	3990	31.535	16.135	16.135

Dimensional Drawings

- **57mm DLM**

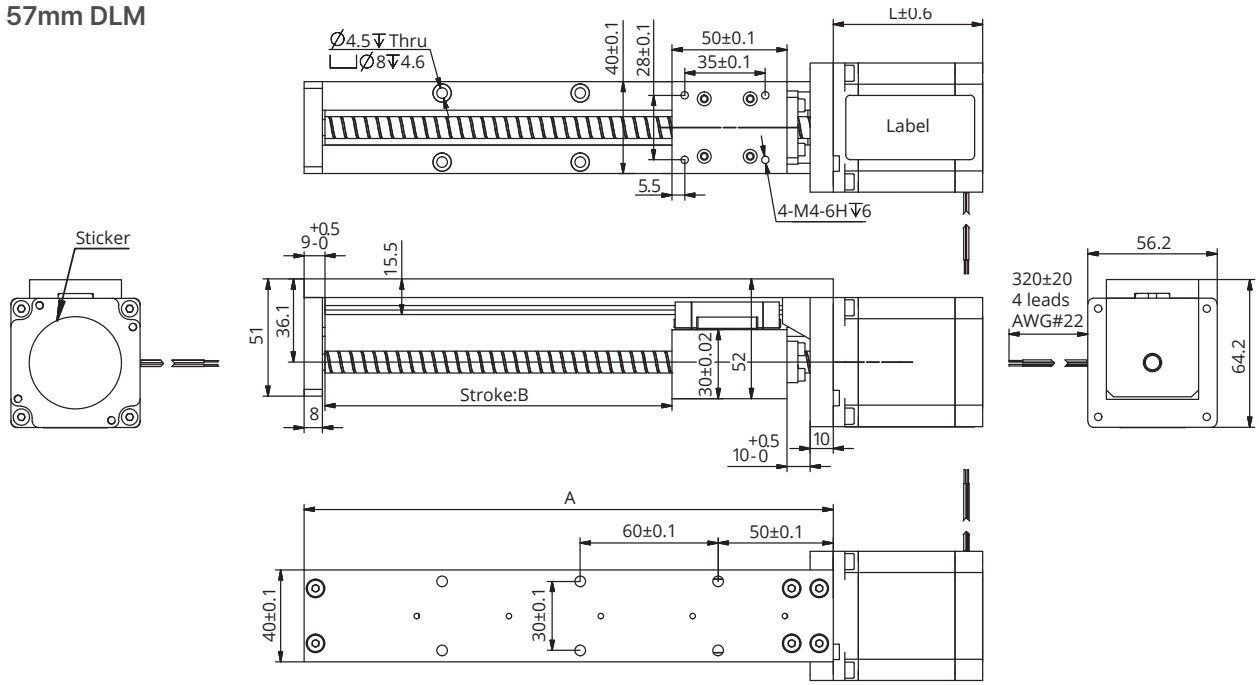

- **Available Stroke Selection**

Size A (mm)	Stroke B (mm)	Weight (kg)	
		Single stack	Double stack
130	50	1.086	1.381
180	100	1.202	1.497
230	150	1.317	1.612
280	200	1.432	1.727
330	250	1.547	1.842
380	300	1.662	1.957
430	350	1.777	2.072
480	400	1.892	2.187
530	450	2.007	2.302
580	500	2.122	2.417
630	550	2.238	2.533
680	600	2.353	2.648

* Weight values are for reference only and may vary with actual configuration.

Note : All drawings are 1st-angle projection - ISO Compliant (3D models available)

Size 57mm DLM / LR-DLM

57mm LR-DLM

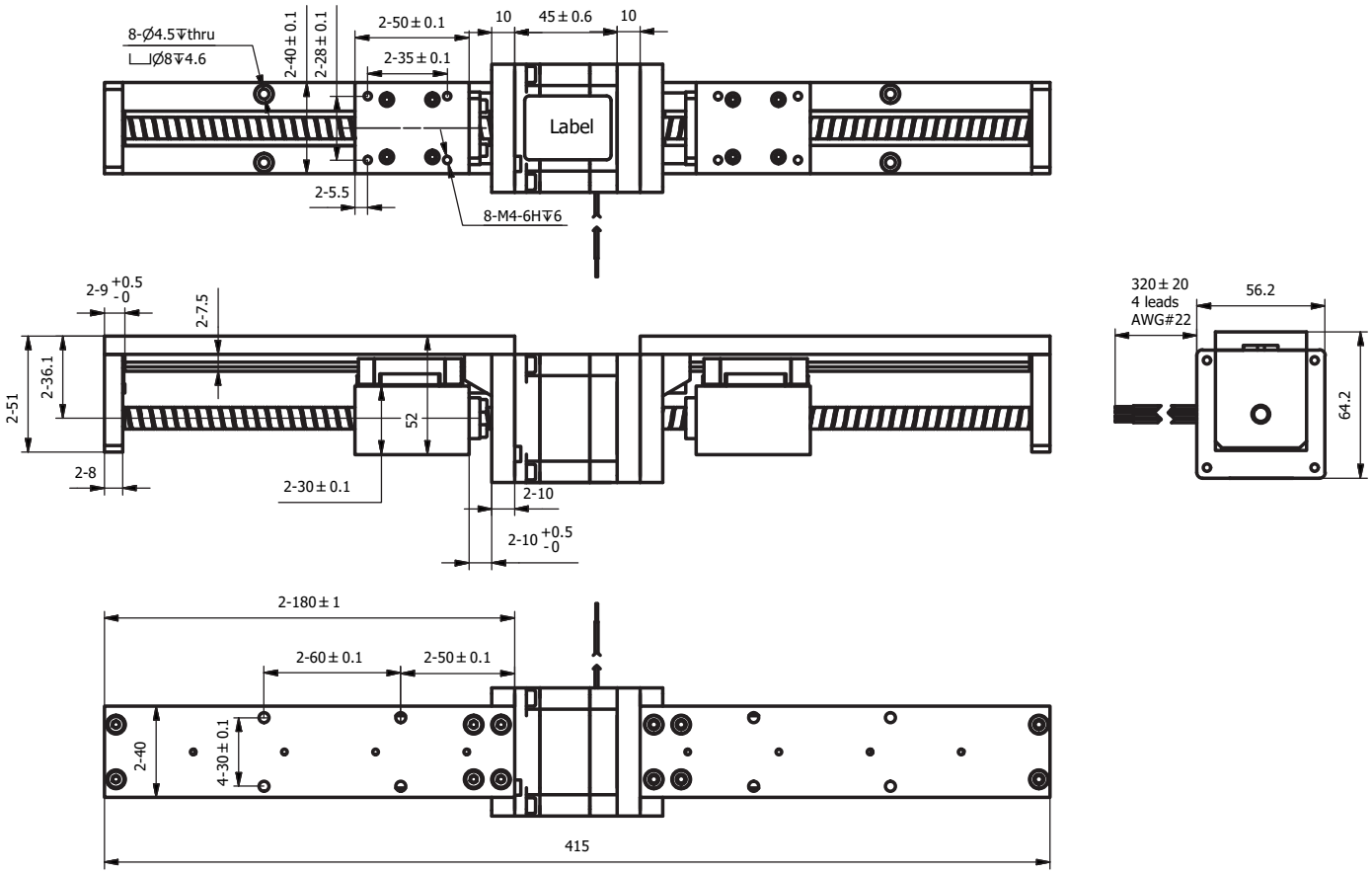

Available Stroke Selection

Stroke (mm)	Single stack		Double stack	
	Total Length (mm)	Weight (kg)	Total Length (mm)	Weight (kg)
50	315	1.778	335	2.073
100	415	2.01	435	2.305
150	515	2.242	535	2.537
200	615	2.474	635	2.769
250	715	2.706	735	3.001
300	815	2.938	835	3.233
350	915	3.17	935	3.465
400	1015	3.402	1035	3.697
450	1115	3.634	1135	3.929
500	1215	3.866	1235	4.161

Note : All drawings are 1st-angle projection - ISO Compliant (3D models available)

Speed Thrust Curves

Size 23 Single Stack Speed Thrust Curves

※Bipolar chopper constant current drive, operating current 2A (RMS), screw diameter 9.525mm (Recommended Load Limit 92.5kg)

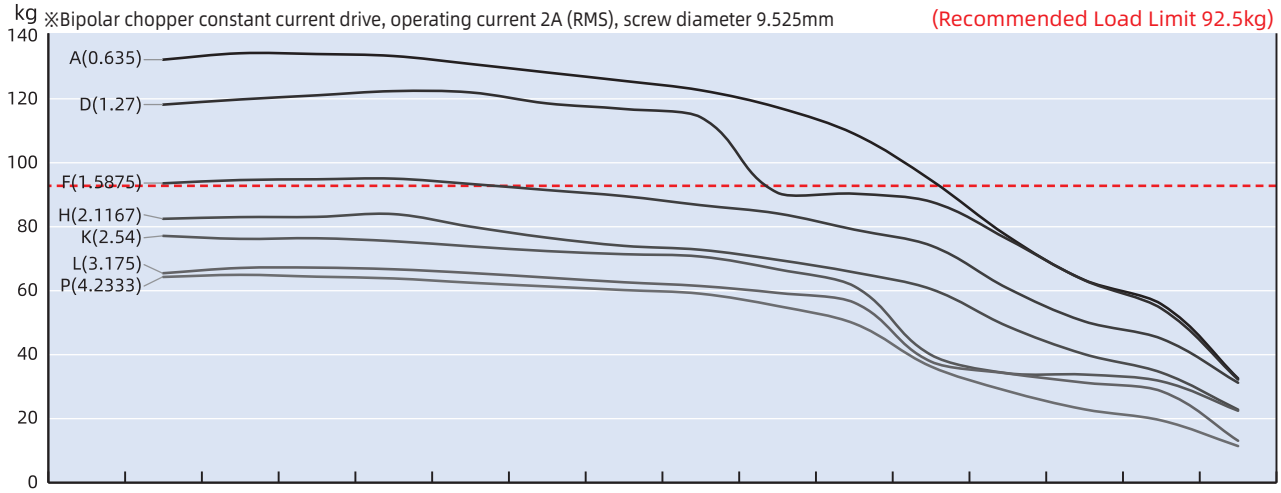

P (mm/s)	2.12	4.23	6.35	8.47	12.7	16.93	21.17	25.4	33.87	42.33	50.8	63.5	76.2	84.66	105.83
L (mm/s)	1.59	3.18	4.76	6.35	9.53	12.7	15.88	19.05	25.4	31.75	38.1	47.63	57.15	63.5	79.38
K (mm/s)	1.27	2.54	3.81	5.08	7.62	10.16	12.7	15.24	20.32	25.4	30.48	38.1	45.72	50.8	63.5
H (mm/s)	1.06	2.12	3.18	4.23	6.35	8.47	10.58	12.7	16.93	21.17	25.4	31.75	38.1	42.33	52.92
F (mm/s)	0.79	1.59	2.38	3.18	4.76	6.35	7.94	9.53	12.7	15.88	19.05	23.81	28.58	31.75	39.69
D (mm/s)	0.64	1.27	1.91	2.54	3.81	5.08	6.35	7.62	10.16	12.7	15.24	19.05	22.86	25.4	31.75
A (mm/s)	0.32	0.64	0.95	1.27	1.91	2.54	3.18	3.81	5.08	6.35	7.62	9.53	11.43	12.7	15.88
Speed r/min	30	60	90	120	180	240	300	360	480	600	720	900	1080	1200	1500
Pulse pps	100	200	300	400	600	800	1000	1200	1600	2000	2400	3000	3600	4000	5000

Size 23 Single Stack Speed Thrust Curves

※Bipolar chopper constant current drive, operating current 2A (RMS), screw diameter 9.525mm (Recommended Load Limit 92.5kg)

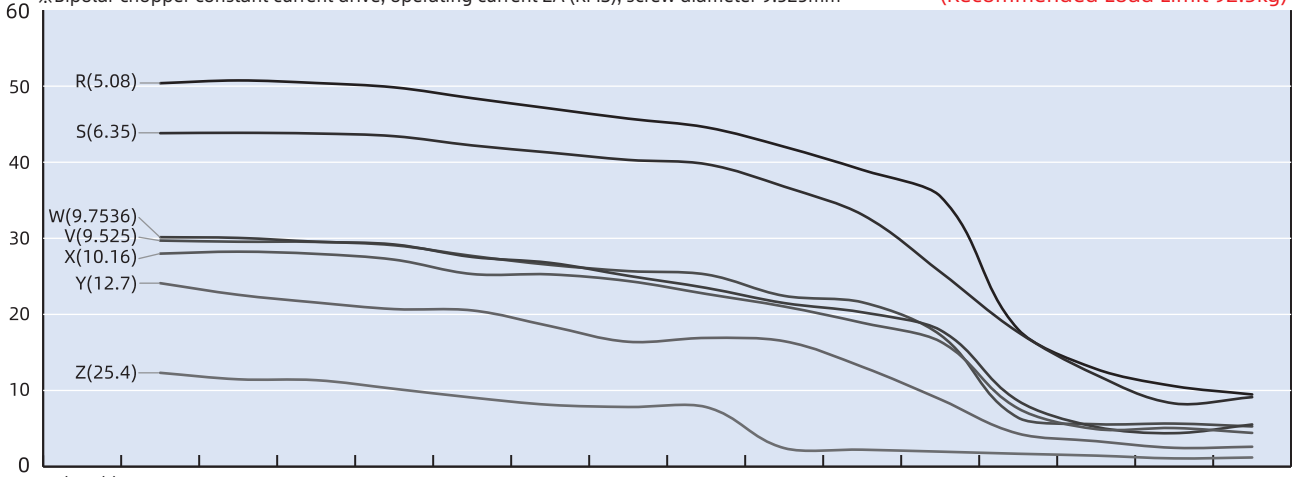

Z (mm/s)	12.7	25.4	38.1	50.8	76.2	101.6	127	152.4	203.2	254	304.8	381	457.2	508	635
Y (mm/s)	6.35	12.7	19.05	25.4	38.1	50.8	63.5	76.2	101.6	127	152.4	190.5	228.6	254	317.5
X (mm/s)	5.08	10.16	15.24	20.32	30.48	40.64	50.8	60.96	81.28	101.6	121.92	152.4	182.88	203.2	254
W (mm/s)	4.88	9.75	14.63	19.51	29.26	39.01	48.77	58.52	78.03	97.54	117.04	146.3	175.56	195.07	243.84
V (mm/s)	4.76	9.53	14.29	19.05	28.58	38.1	47.63	57.15	76.2	95.25	114.3	142.88	171.45	190.5	238.13
S (mm/s)	3.18	6.35	9.53	12.7	19.05	25.4	31.75	38.1	50.8	63.5	76.2	95.25	114.3	127	158.75
R (mm/s)	2.54	5.08	7.62	10.16	15.24	20.32	25.4	30.48	40.64	50.8	60.96	76.2	91.44	101.6	127
Speed r/min	30	60	90	120	180	240	300	360	480	600	720	900	1080	1200	1500
Pulse pps	100	200	300	400	600	800	1000	1200	1600	2000	2400	3000	3600	4000	5000

TEST CONDITION

Testing Voltage: 48Vdc, Driver Model: DS-OLS4-FPD bipolar, chopper driver at rated current (rms).
Motor thrust may vary depending on voltage and driver conditions. 50% thrust margin is recommended.

Size 57mm DLM / LR-DLM

Size 23 Single Stack Speed Thrust Curves

※Bipolar chopper constant current drive, operating current 2A (RMS), screw diameter 10&12&12.7mm (Recommended Load Limit 92.5kg)

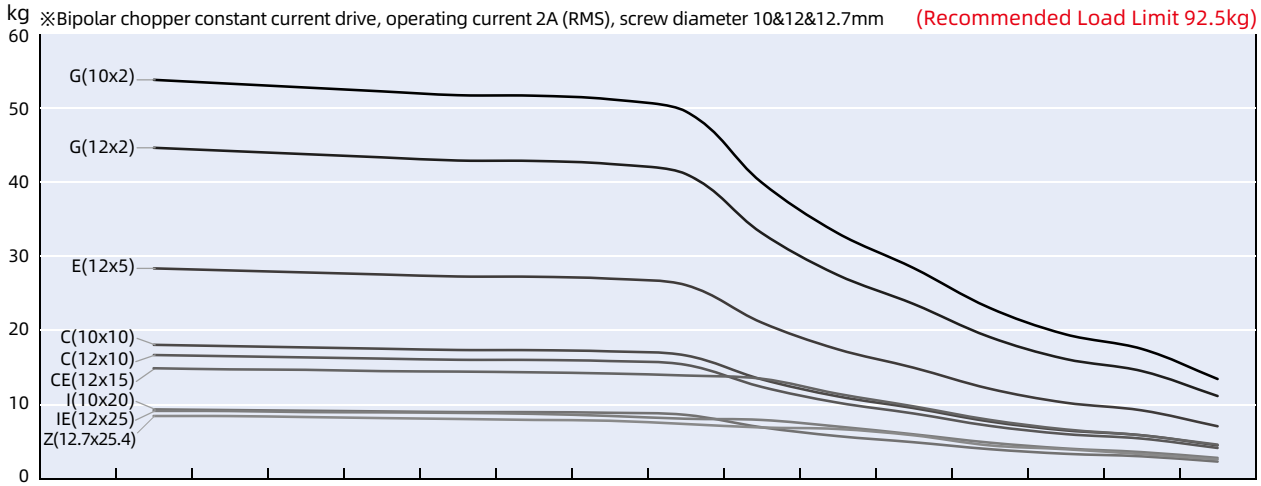

Z(mm/s)	12.7	25.4	38.1	50.8	76.2	101.6	127	152.4	203.2	254	304.8	381	457.2	508	635
IE(mm/s)	12.5	25	37.5	50	75	100	125	150	200	250	300	375	450	500	625
I(mm/s)	10	20	30	40	60	80	100	120	160	200	240	300	360	400	500
CE(mm/s)	7.5	15	22.5	30	45	60	75	90	120	150	180	225	270	300	375
C(mm/s)	5	10	15	20	30	40	50	60	80	100	120	150	180	200	250
E(mm/s)	2.5	5	7.5	10	15	20	25	30	40	50	60	75	90	100	125
G(mm/s)	1	2	3	4	6	8	10	12	16	20	24	30	36	40	50
Speed r/min	30	60	90	120	180	240	300	360	480	600	720	900	1080	1200	1500
Pulse pps	100	200	300	400	600	800	1000	1200	1600	2000	2400	3000	3600	4000	5000

Size 23 Double Stack Speed Thrust Curves

※Bipolar chopper constant current drive, operating current 2.5A (RMS), screw diameter 9.525mm (Recommended Load Limit 92.5kg)

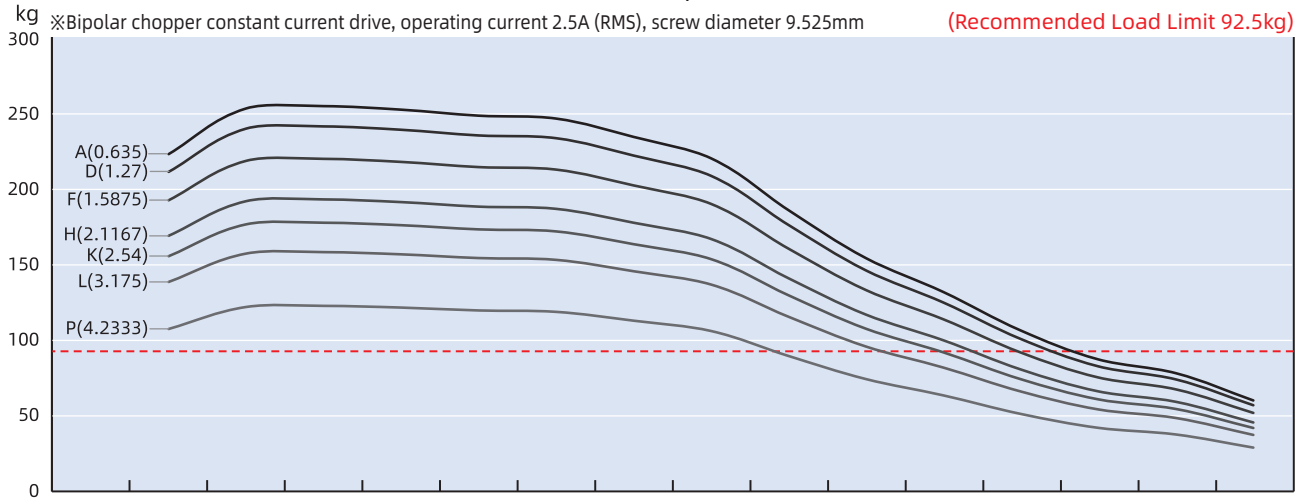

P (mm/s)	2.12	4.23	6.35	8.47	12.7	16.93	21.17	25.4	33.87	42.33	50.8	63.5	76.2	84.66	105.83
L (mm/s)	1.59	3.18	4.76	6.35	9.53	12.7	15.88	19.05	25.4	31.75	38.1	47.63	57.15	63.5	79.38
K (mm/s)	1.27	2.54	3.81	5.08	7.62	10.16	12.7	15.24	20.32	25.4	30.48	38.1	45.72	50.8	63.5
H (mm/s)	1.06	2.12	3.18	4.23	6.35	8.47	10.58	12.7	16.93	21.17	25.4	31.75	38.1	42.33	52.92
F (mm/s)	0.79	1.59	2.38	3.18	4.76	6.35	7.94	9.53	12.7	15.88	19.05	23.81	28.58	31.75	39.69
D (mm/s)	0.64	1.27	1.91	2.54	3.81	5.08	6.35	7.62	10.16	12.7	15.24	19.05	22.86	25.4	31.75
A (mm/s)	0.32	0.64	0.95	1.27	1.91	2.54	3.18	3.81	5.08	6.35	7.62	9.53	11.43	12.7	15.88
Speed r/min	30	60	90	120	180	240	300	360	480	600	720	900	1080	1200	1500
Pulse pps	100	200	300	400	600	800	1000	1200	1600	2000	2400	3000	3600	4000	5000

TEST CONDITION

Testing Voltage: 48Vdc, Driver Model: DS-OLS4-FPD bipolar, chopper driver at rated current (rms).
Motor thrust may vary depending on voltage and driver conditions. 50% thrust margin is recommended.

Size 57mm DLM / LR-DLM

Size 23 Double Stack Speed Thrust Curves

※Bipolar chopper constant current drive, operating current 2.5A (RMS), screw diameter 9.525mm (Recommended Load Limit 92.5kg)

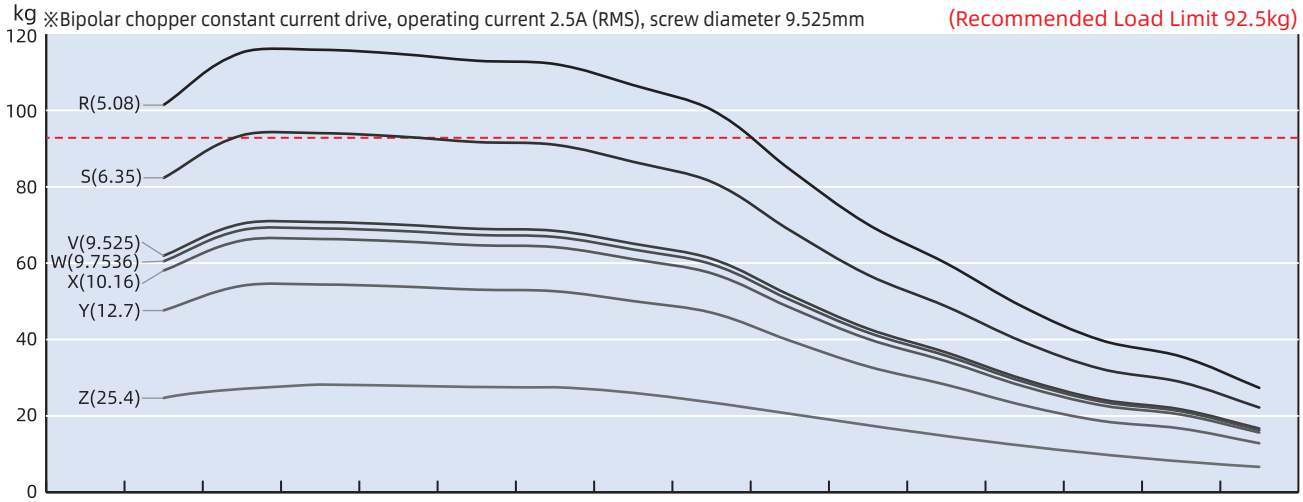

Z (mm/s)	12.7	25.4	38.1	50.8	76.2	101.6	127	152.4	203.2	254	304.8	381	457.2	508	635
Y (mm/s)	6.35	12.7	19.05	25.4	38.1	50.8	63.5	76.2	101.6	127	152.4	190.5	228.6	254	317.5
X (mm/s)	5.08	10.16	15.24	20.32	30.48	40.64	50.8	60.96	81.28	101.6	121.92	152.4	182.88	203.2	254
W (mm/s)	4.88	9.75	14.63	19.51	29.26	39.01	48.77	58.52	78.03	97.54	117.04	146.3	175.56	195.07	243.84
V (mm/s)	4.76	9.53	14.29	19.05	28.58	38.1	47.63	57.15	76.2	95.25	114.3	142.88	171.45	190.5	238.13
S (mm/s)	3.18	6.35	9.53	12.7	19.05	25.4	31.75	38.1	50.8	63.5	76.2	95.25	114.3	127	158.75
R (mm/s)	2.54	5.08	7.62	10.16	15.24	20.32	25.4	30.48	40.64	50.8	60.96	76.2	91.44	101.6	127
Speed r/min	30	60	90	120	180	240	300	360	480	600	720	900	1080	1200	1500
Pulse pps	100	200	300	400	600	800	1000	1200	1600	2000	2400	3000	3600	4000	5000

Size 23 Double Stack Speed Thrust Curves

※Bipolar chopper constant current drive, operating current 2.5A (RMS), screw diameter 10&12&12.7mm (Recommended Load Limit 92.5kg)

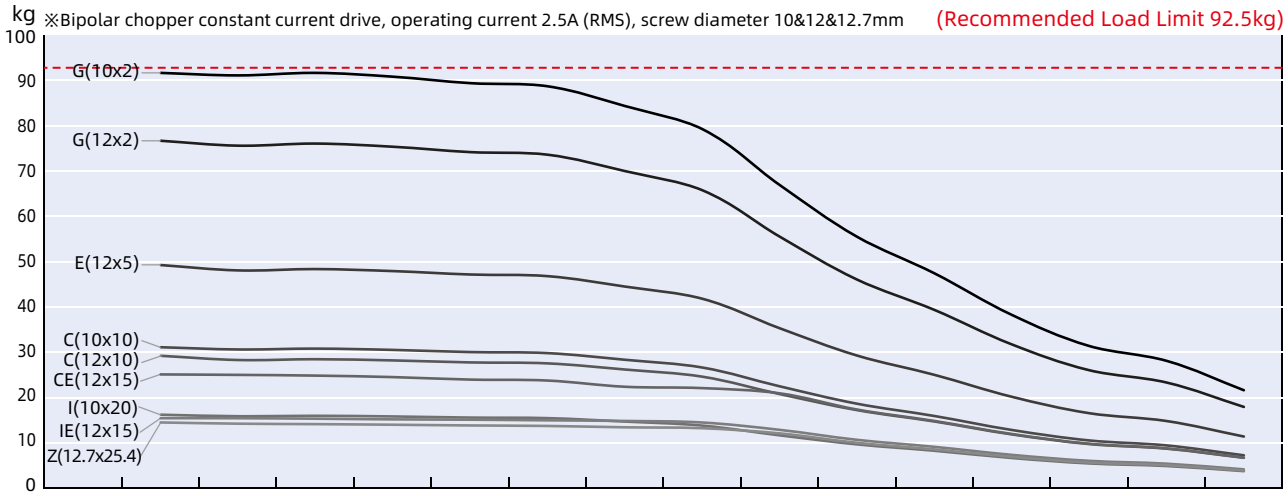

Z(mm/s)	12.7	25.4	38.1	50.8	76.2	101.6	127	152.4	203.2	254	304.8	381	457.2	508	635
IE(mm/s)	12.5	25	37.5	50	75	100	125	150	200	250	300	375	450	500	625
I(mm/s)	10	20	30	40	60	80	100	120	160	200	240	300	360	400	500
CE(mm/s)	7.5	15	22.5	30	45	60	75	90	120	150	180	225	270	300	375
C(mm/s)	5	10	15	20	30	40	50	60	80	100	120	150	180	200	250
E(mm/s)	2.5	5	7.5	10	15	20	25	30	40	50	60	75	90	100	125
G(mm/s)	1	2	3	4	6	8	10	12	16	20	24	30	36	40	50
Speed r/min	30	60	90	120	180	240	300	360	480	600	720	900	1080	1200	1500
Pulse pps	100	200	300	400	600	800	1000	1200	1600	2000	2400	3000	3600	4000	5000

TEST CONDITION

Testing Voltage: 48Vdc, Driver Model: DS-OLS4-FPD bipolar, chopper driver at rated current (rms).
Motor thrust may vary depending on voltage and driver conditions. 50% thrust margin is recommended.

DSM Series

The DSM series of precise and compact linear modules combines all major aspects of the precise linear Motor system into a small and economical structure, including external drive linear actuators, precise screw rods and high-precision linear guides.

The DSM series linear modules are available in NEMA 6, 8, 11, 14, and 17 motor sizes. There are over 80 types of screw rods available for matching, with a range of lead options ranging from 0.3 to 25.4mm.

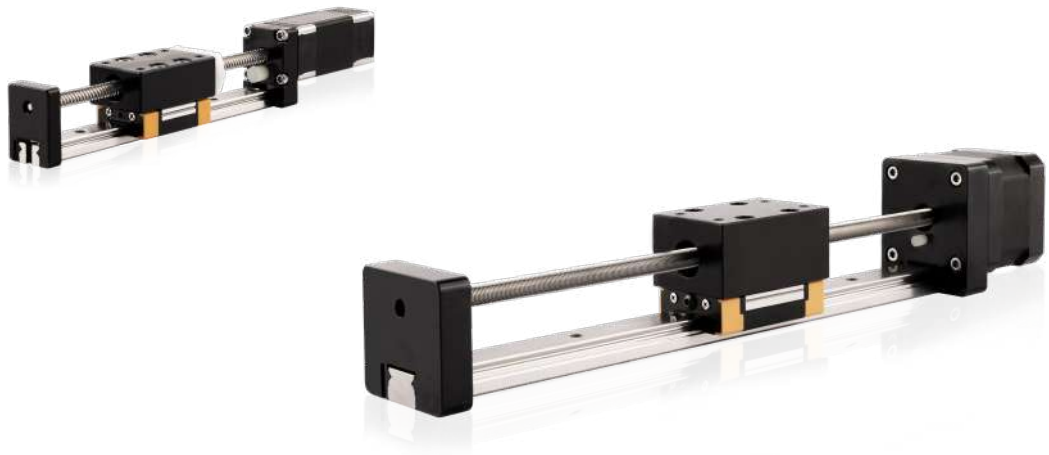

Part number construction	I-35
14 mm	I-36
20 mm	I-38
28 mm	I-40
35 mm	I-42
42 mm	I-44

Part Number Construction

DSM 100 - 17 E 2 1 10 S 4 - EK7D-001

① ② ③ ④ ⑤ ⑥ ⑦ ⑧ ⑨ ⑩ ⑪

① Product Name
DSM Series Module

② Stroke (mm)
100 = 100mm

③ Motor Size

Motor Size (mm)	14	20	28	35	42
Motor Size (NEMA)	6	8	11	14	17

④ Motor Type
E = External type
N = Non-Captive type

⑤ Motor Step Angle
2 = 2-phase, 1.8° step angle
4 = 2-phase, 0.9° step angle

⑥ Motor Length
1 = Single stack
2 = Double stack

⑦ Rated Current / Phase
XX = X.X (A) / Phase

⑧ Lead Screw Code
Please refer to the lead screw code selection table

⑨ Number of Lead Wires
4 = 4-wire leads
6 = 6-wire leads

⑩ Option
EKX = Encoder [X = Encoder Resolution]
P = Manual Knob
B = Brake
X = Rear Shaft
R = Encoder Ready
C = Customization
N = No rear-end machining

⑪ Customer Sequence Number

Example

Part Number	DSM100-17E2110S4-EK7D-001
Description	DSM Linear Module 100mm Stroke NEMA 17 External Linear Actuator 2-phase / 1.8° Stepper Single Stack 1.0A / Phase S Lead (0.25" or 6.35mm) 4-wire leads EK7D Encoder with differential output 1,000 lines Serial Number 001

Size 14mm DSM

Based on DINGS' high-precision lead screw linear actuator platform and self-developed compact linear module structure, the DSM 14mm series provides compact, reliable, and high-precision linear motion solutions.

The DSM 14mm series offers a wide range of stroke and lead options with extensive customization capabilities, enabling integrated customized solutions for various applications.

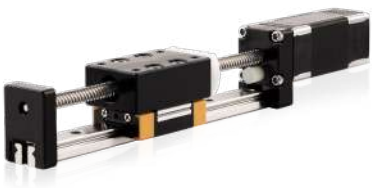

Motor Characteristics

Motor	Voltage (V)	Current (A [RMS])	Resistance (Ω)	Inductance (mH)	Weight (g)	Lead wires	Motor length (mm)
6E2103	6.6	0.25	22	4.5	60	4	32

Available Lead Screw and Travel per Step

Screw Dia. (inch)	Screw Dia. (mm)	Lead (inch)	Lead (mm)	Lead Code	Travel Per Step @1.8° (mm)*
0.138	3.5	0.0118	0.3	AF	0.0015
0.138	3.5	0.024	0.6096	AA	0.003048
0.138	3.5	0.048	1.2192	B	0.006096
0.138	3.5	0.0787	2	G	0.01
0.138	3.5	0.1575	4	M	0.02
0.138	3.5	0.315	8	T	0.04

Mechanical Specifications

Model	C100B(dyn)(N)	Co(stat)(N)	Mro(Nm)	Mpo(Nm)	Myo(Nm)
DSM 14	714	1071	3.794	2.219	2.219

Size 14mm DSM

Dimensional Drawings

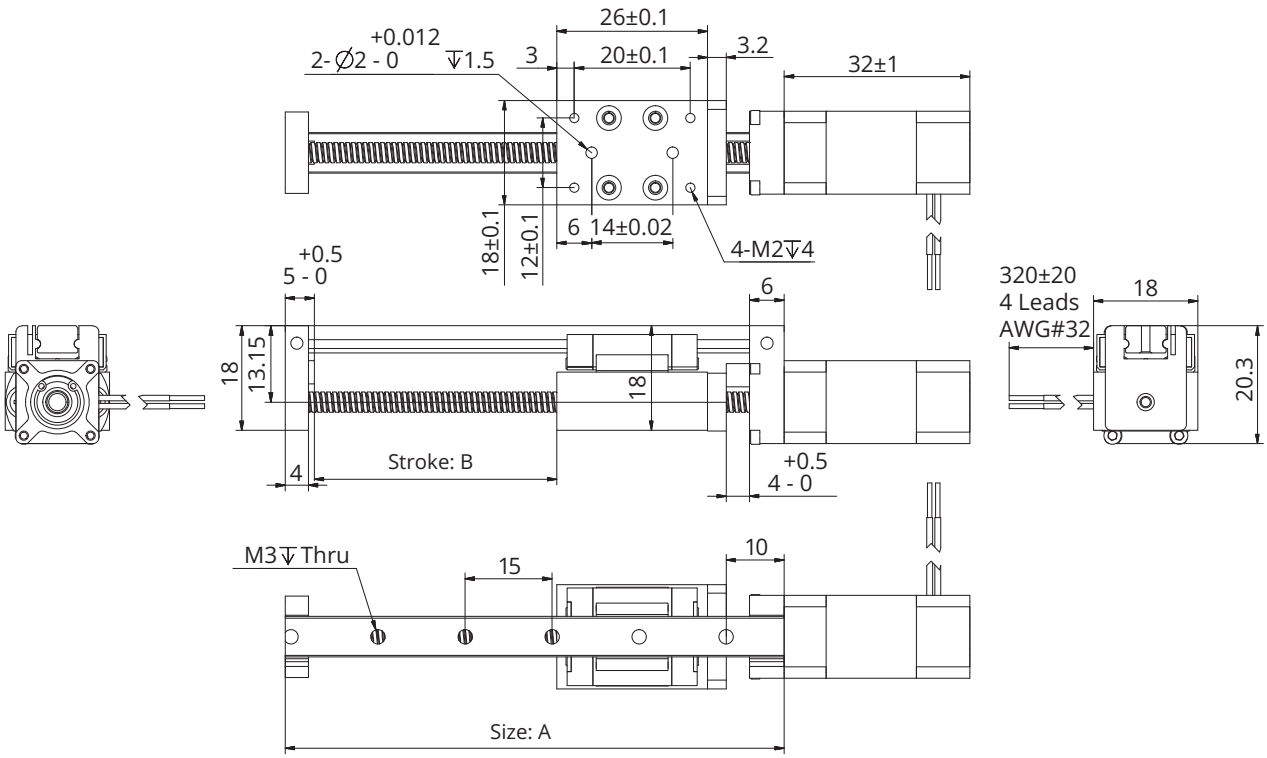

* Note: Stroke length can be customized within the maximum travel range.

Available Stroke Selection

Size A (mm)	Stroke B (mm)	Weight (kg)	
		Single stack	Double stack
66	20	0.090	-
86	40	0.103	-
106	60	0.109	-
126	80	0.115	-
146	100	0.121	-

* Weight values are for reference only and may vary with actual configuration.

Note : All drawings are 1st-angle projection - ISO Compliant (3D models available)

Size 20mm DSM

Based on DINGS' high-precision lead screw linear actuator platform and self-developed compact linear module structure, the DSM 20mm series provides compact, reliable, and high-precision linear motion solutions.

The DSM 20mm series offers a wide range of stroke and lead options with extensive customization capabilities, enabling integrated customized solutions for various applications.

Motor Characteristics

Motor	Voltage (V)	Current (A [RMS])	Resistance (Ω)	Inductance (mH)	Lead wires	Motor length (mm)
8E2105	2.5	0.5	5.1	1.5	4	27.2
8E2205	4.4	0.5	8.8	2.7	4	38.1

Available Lead Screw and Travel per Step

Screw Dia. (inch)	Screw Dia. (mm)	Lead (inch)	Lead (mm)	Lead Code	Travel Per Step @1.8° (mm)*
0.138	3.5	0.0118	0.3	AF	0.0015
0.138	3.5	0.024	0.6096	AA	0.003048
0.128	3.24	0.0394	1	AB	0.005
0.138	3.5	0.048	1.2192	B	0.006096
0.138	3.5	0.0787	2	G	0.01
0.138	3.5	0.096	2.4384	J	0.012192
0.138	3.5	0.1575	4	M	0.02
0.138	3.5	0.315	8	T	0.04

Mechanical Specifications

Model	C100B(dyn)(N)	Co(stat)(N)	Mro(Nm)	Mpo(Nm)	Myo(Nm)
DSM 20	1379	1820	8.288	5.733	5.733

Size 20mm DSM

Dimensional Drawings

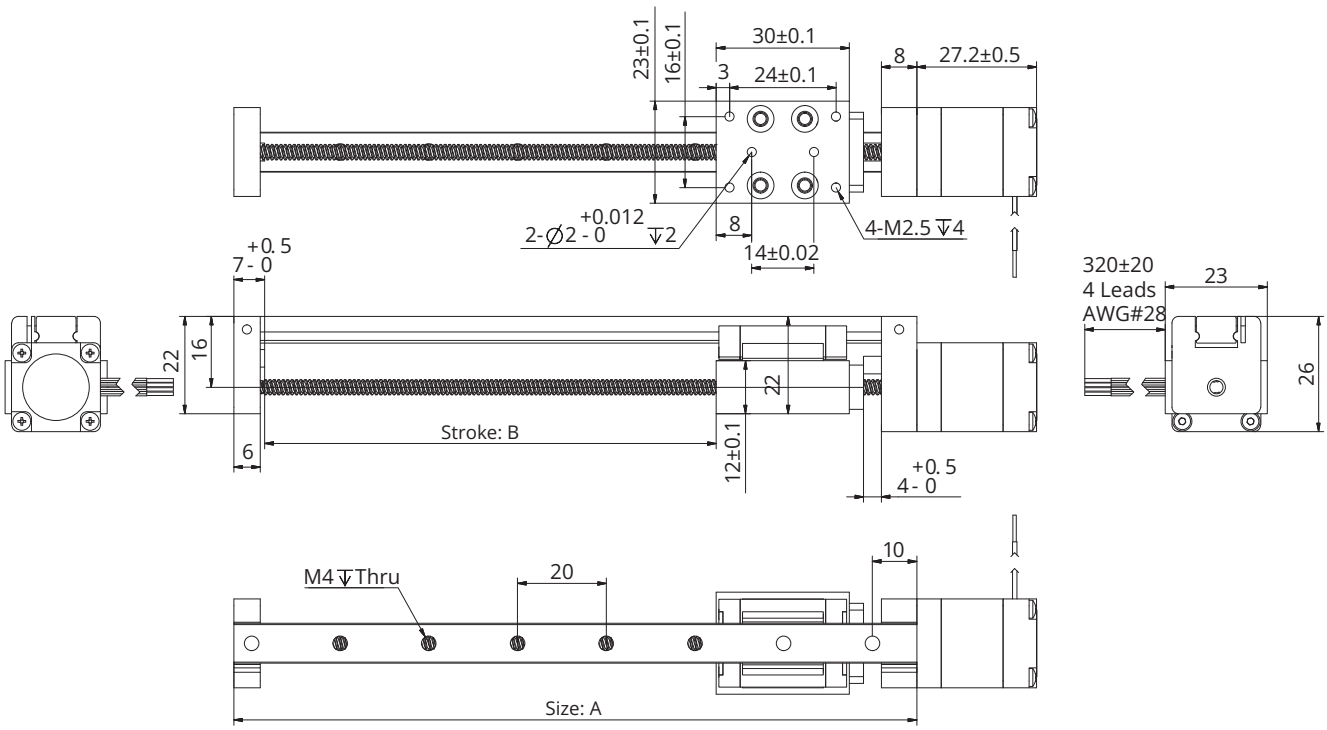

* Note: Stroke length can be customized within the maximum travel range.

Available Stroke Selection

Size A (mm)	Stroke B (mm)	Weight (kg)	
		Single stack	Double stack
74	20	0.128	0.151
94	40	0.136	0.159
114	60	0.143	0.166
134	80	0.151	0.174
154	100	0.158	0.181

* Weight values are for reference only and may vary with actual configuration.

Note : All drawings are 1st-angle projection - ISO Compliant (3D models available)

Size 28mm DSM

Based on DINGS' high-precision lead screw linear actuator platform and self-developed compact linear module structure, the DSM 28mm series provides compact, reliable, and high-precision linear motion solutions.

The DSM 28mm series offers a wide range of stroke and lead options with extensive customization capabilities, enabling integrated customized solutions for various applications.

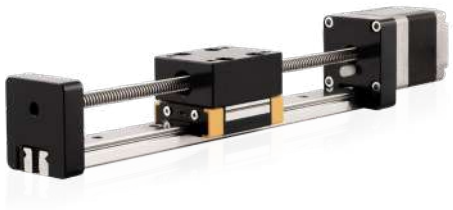

Motor Characteristics

Motor	Voltage (V)	Current (A [RMS])	Resistance (Ω)	Inductance (mH)	Lead wires	Motor length (mm)
11E2105	4.55	0.5	9.1	6.0	4	33.35
11E2110	2.1	1.0	2.1	1.5	4	33.35
11E2209	3.9	0.95	4.1	4.0	4	45
11E2216	2.4	1.6	1.5	1.3	4	45

Available Lead Screw and Travel per Step

Screw Dia. (inch)	Screw Dia. (mm)	Lead (inch)	Lead (mm)	Lead Code	Travel Per Step @1.8° (mm)*
0.188	4.77	0.0125	0.3175	AL	0.0016
0.188	4.77	0.025	0.635	A	0.003175
0.188	4.77	0.05	1.27	D	0.00635
0.188	4.77	0.0625	1.5875	F	0.0079
0.188	4.77	0.1	2.54	K	0.0127
0.188	4.77	0.192	4.8768	Q	0.0244
0.188	4.77	0.2	5.08	R	0.0254
0.188	4.77	0.4	10.16	X	0.0508

Mechanical Specifications

Model	C100B(dyn)(N)	Co(stat)(N)	Mro(Nm)	Mpo(Nm)	Myo(Nm)
DSM 28	2128	2702	16.541	8.799	8.799

Size 28mm DSM

Dimensional Drawings

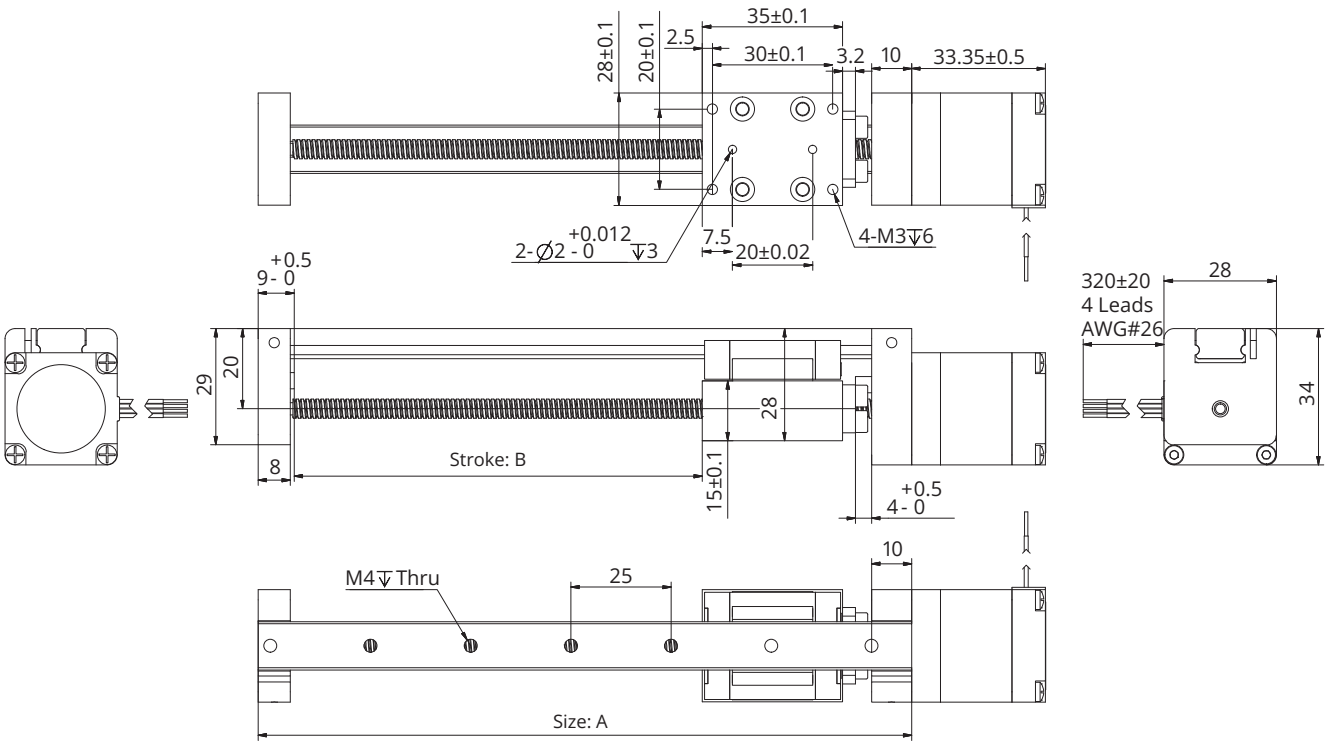

* Note: Stroke length can be customized within the maximum travel range.

Available Stroke Selection

Size A (mm)	Stroke B (mm)	Weight (kg)	
		Single stack	Double stack
83	20	0.286	0.342
103	40	0.300	0.356
123	60	0.315	0.371
143	80	0.329	0.385
163	100	0.344	0.400

* Weight values are for reference only and may vary with actual configuration.

Note : All drawings are 1st-angle projection - ISO Compliant (3D models available)

Size 35mm DSM

Based on DINGS' high-precision lead screw linear actuator platform and self-developed compact linear module structure, the DSM 35mm series provides compact, reliable, and high-precision linear motion solutions.

The DSM 35mm series offers a wide range of stroke and lead options with extensive customization capabilities, enabling integrated customized solutions for various applications.

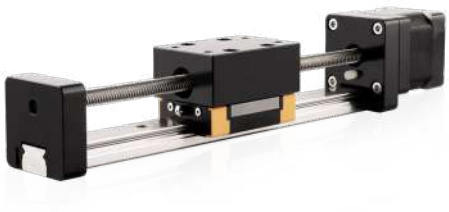

Motor Characteristics

Motor	Voltage (V)	Current (A [RMS])	Resistance (Ω)	Inductance (mH)	Lead wires	Motor length (mm)
14E2105	6.6	0.5	13.2	14	4	33.6
14E2110	3.5	1.0	3.5	3.6	4	33.6
14E2115	2.7	1.5	1.8	1.9	4	33.6
14E2205	12.0	0.5	24.0	29	4	45.6
14E2210	6.0	1.0	6.0	7.2	4	45.6
14E2215	4.0	1.5	2.7	3.2	4	45.6

Available Lead Screw and Travel per Step

Screw Dia. (inch)	Screw Dia. (mm)	Lead (inch)	Lead (mm)	Lead Code	Travel Per Step @1.8° (mm)*
0.25	6.35	0.024	0.6096	AA	0.003048
0.25	6.35	0.0394	1	AB	0.005
0.25	6.35	0.048	1.2192	B	0.006096
0.25	6.35	0.05	1.27	D	0.00635
0.25	6.35	0.0625	1.5875	F	0.0079
0.25	6.35	0.096	2.4384	J	0.0122
0.25	6.35	0.1	2.54	K	0.0127
0.25	6.35	0.125	3.175	L	0.0159
0.25	6.35	0.192	4.8768	Q	0.024
0.25	6.35	0.2	5.08	R	0.0254
0.25	6.35	0.25	6.35	S	0.0318
0.25	6.35	0.333	8.4667	U	0.0423
0.25	6.35	0.384	9.7536	W	0.0488
0.25	6.35	0.5	12.7	Y	0.0635
0.25	6.35	1	25.4	Z	0.127
0.315	8	0.1575	4	M	0.02
0.315	8	0.315	8	T	0.04
0.315	8	0.0787	2	G	0.01
0.315	8	0.3937	10	C	0.05

Size 35mm DSM

Mechanical Specifications

Model	C100B(dyn)(N)	Co(stat)(N)	Mro(Nm)	Mpo(Nm)	Myo(Nm)
DSM 35	2989	3990	31.535	16.135	16.135

Dimensional Drawings

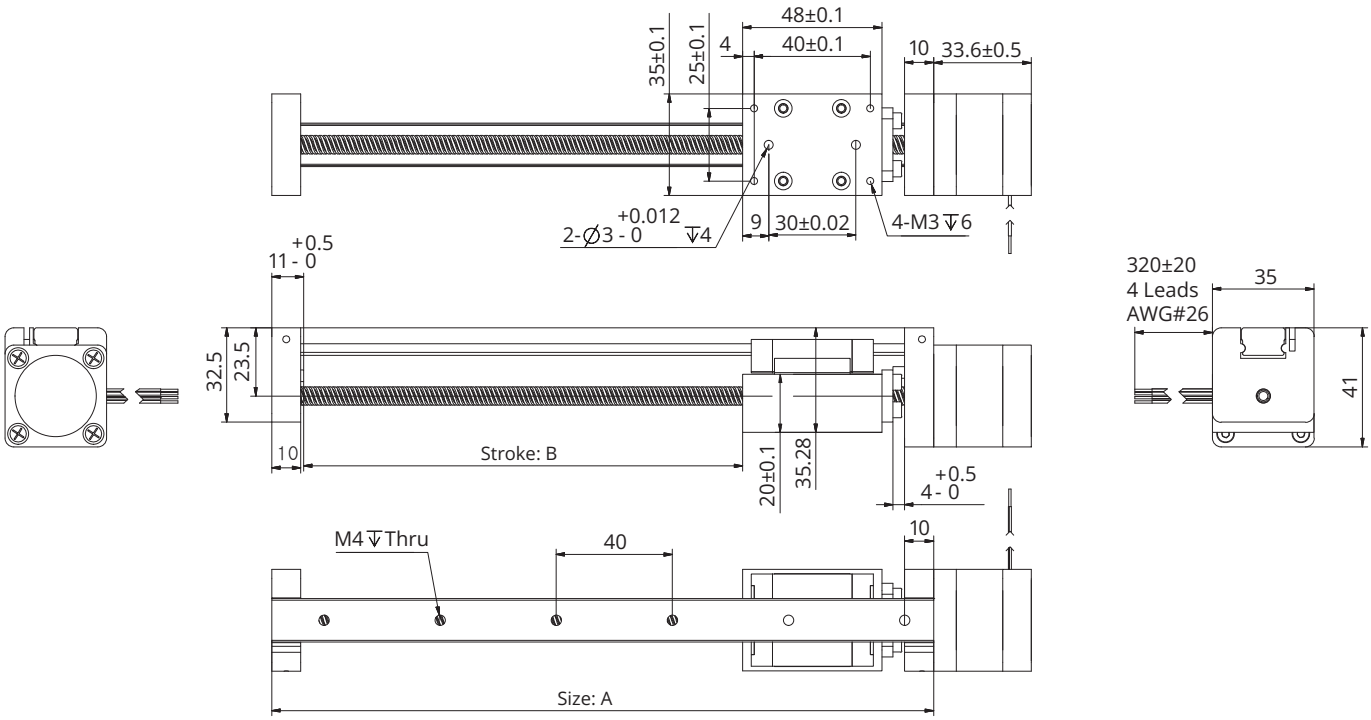

* Note: Stroke length can be customized within the maximum travel range.

Available Stroke Selection

Size A (mm)	Stroke B (mm)	Weight (kg)	
		Single stack	Double stack
98	20	0.465	0.486
118	40	0.481	0.502
138	60	0.498	0.519
158	80	0.514	0.535
178	100	0.530	0.551
228	150	0.589	0.610

* Weight values are for reference only and may vary with actual configuration.

Note : All drawings are 1st-angle projection - ISO Compliant (3D models available)

Size 42mm DSM

Based on DINGS' high-precision lead screw linear actuator platform and self-developed compact linear module structure, the DSM 42mm series provides compact, reliable, and high-precision linear motion solutions.

The DSM 42mm series offers a wide range of stroke and lead options with extensive customization capabilities, enabling integrated customized solutions for various applications.

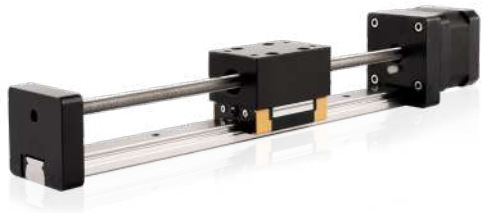

Motor Characteristics

Motor	Voltage (V)	Current (A [RMS])	Resistance (Ω)	Inductance (mH)	Lead wires	Motor length (mm)
17E2105	7.2	0.5	14.4	19.8	4	34.1
17E2110	3.8	1.0	3.8	5.0	4	34.1
17E2115	2.85	1.5	1.9	2.2	4	34.1
17E2205	11.0	0.5	22	46	4	48.1
17E2212	4.5	1.2	3.8	8.0	4	48.1
17E2225	2.5	2.5	1.0	1.8	4	48.1

Available Lead Screw and Travel per Step

Screw Dia. (inch)	Screw Dia. (mm)	Lead (inch)	Lead (mm)	Lead Code	Travel Per Step @1.8° (mm)*
0.25	6.35	0.024	0.6096	AA	0.003048
0.25	6.35	0.0394	1	AB	0.005
0.25	6.35	0.048	1.2192	B	0.006096
0.25	6.35	0.05	1.27	D	0.00635
0.25	6.35	0.0625	1.5875	F	0.0079
0.25	6.35	0.096	2.4384	J	0.0122
0.25	6.35	0.1	2.54	K	0.0127
0.25	6.35	0.125	3.175	L	0.0159
0.25	6.35	0.192	4.8768	Q	0.024
0.25	6.35	0.2	5.08	R	0.0254
0.25	6.35	0.25	6.35	S	0.0318
0.25	6.35	0.333	8.4667	U	0.0423
0.25	6.35	0.384	9.7536	W	0.0488
0.25	6.35	0.5	12.7	Y	0.0635
0.25	6.35	1	25.4	Z	0.127
0.315	8	0.1575	4	M	0.02
0.315	8	0.315	8	T	0.04
0.315	8	0.0787	2	G	0.01
0.315	8	0.3937	10	C	0.05

Size 42mm DSM

Mechanical Specifications

Model	C100B(dyn)(N)	Co(stat)(N)	Mro(Nm)	Mpo(Nm)	Myo(Nm)
DSM 42	2989	3990	31.535	16.135	16.135

Dimensional Drawings

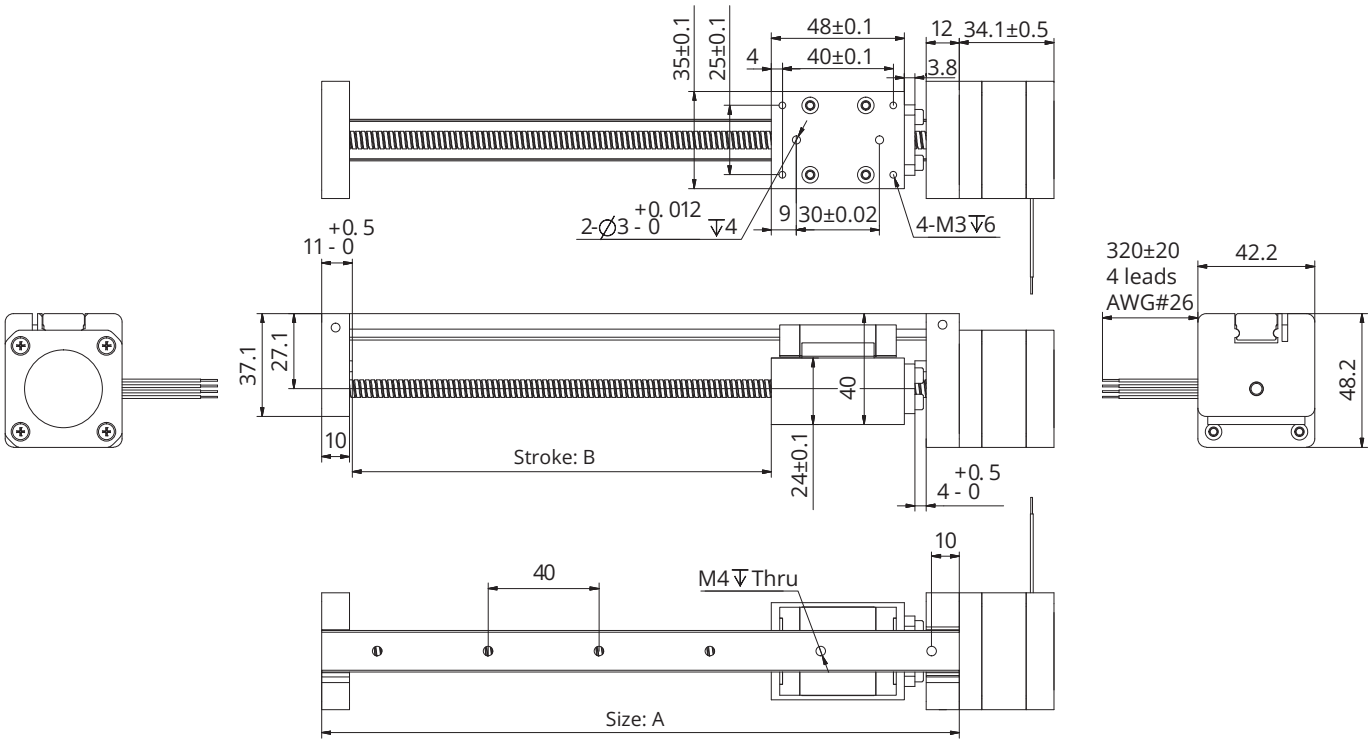

* Note: Stroke length can be customized within the maximum travel range.

Available Stroke Selection

Size A (mm)	Stroke B (mm)	Weight (kg)	
		Single stack	Double stack
100	20	0.628	0.760
120	40	0.653	0.785
140	60	0.678	0.810
160	80	0.702	0.834
180	100	0.727	0.859
230	150	0.788	0.920

* Weight values are for reference only and may vary with actual configuration.

Note : All drawings are 1st-angle projection - ISO Compliant (3D models available)

DSLM Series

DINGS' DSLM Series is available in NEMA size 14, 17 and 23 offers excellent linear speed and precise positioning performance.

Using spline slide rail as linear guide, it maximizes travel distance as max. 900mm stroke and ensures stable slider movement.

The DSLM series offers Teflon coating for a longer life cycle and employs a fixed half-nut structure to drive the slide, providing stable operation.

Part number construction	I-47
35 mm	I-48
42 mm	I-49
57 mm	I-50

Part Number Construction

DSLM 183 - 14 E 2 1 10 R 4 - 001

① ② ③ ④ ⑤ ⑥ ⑦ ⑧ ⑨ ⑩

① Product Name
DSLM Series Module

② Stroke (mm)
183 = 183mm

③ Motor Size

Motor Size (mm)	35	42	57
Motor Size (NEMA)	14	17	23

④ Motor Type
E = External type

⑤ Motor Step Angle
2 = 2-phase, 1.8° step angle

⑥ Motor Length
1 = Single stack
2 = Double stack

⑦ Rated Current / Phase
XX = X.X (A) / Phase

⑧ Lead Screw Code
Please refer to the lead screw code selection table

⑨ Number of Lead Wires
4 = 4-wire leads

⑩ Customer Sequence Number

Example

Part Number	DSLM183-14E2110R4-001
Description	DSLM Linear Module 183mm Stroke NEMA 14 External Linear Actuator 2-phase / 1.8° Stepper Single Stack 1.0A / Phase R Lead (0.2" or 5.08mm) 4-wire leads Serial Number 001

As the DSLM module uses sliding friction, please check the standard linear thrust data and allow a 1–2 kg margin in product selection.

Size 35mm DSLM

DINGS' DSLM Series in NEMA Size 14 [35mm] offers excellent linear speed and precise positioning performance.

Using spline slide rail as linear guide, it maximizes travel distance as max. 900mm stroke and ensures stable slider movement.

The DSLM series offers Teflon coating for a longer life cycle and employs a fixed half-nut structure to drive the slide, providing stable operation.

Motor Characteristics

Motor	Voltage (V)	Current (A [RMS])	Resistance (Ω)	Inductance (mH)	Lead wires	Motor length (mm)
14E2105	6.6	0.5	13.2	14	4	33.6
14E2110	3.5	1.0	3.5	3.6	4	33.6
14E2115	2.7	1.5	1.8	1.9	4	33.6
14E2205	12.0	0.5	24.0	29	4	45.6
14E2210	6.0	1.0	6.0	7.2	4	45.6
14E2215	4.0	1.5	2.7	3.2	4	45.6

Available Lead Screw and Travel per Step

Screw Dia. (inch)	Screw Dia. (mm)	Lead (inch)	Lead (mm)	Lead Code	Travel Per Step @1.8° (mm)*
0.25	6.35	0.2	5.08	R	0.0254

Dimensional Drawings

Available Stroke Selection

Stroke (mm)	Base Length
50	126
100	176
150	226
200	276
250	326
300	376
350	426
400	476
450	526
500	576

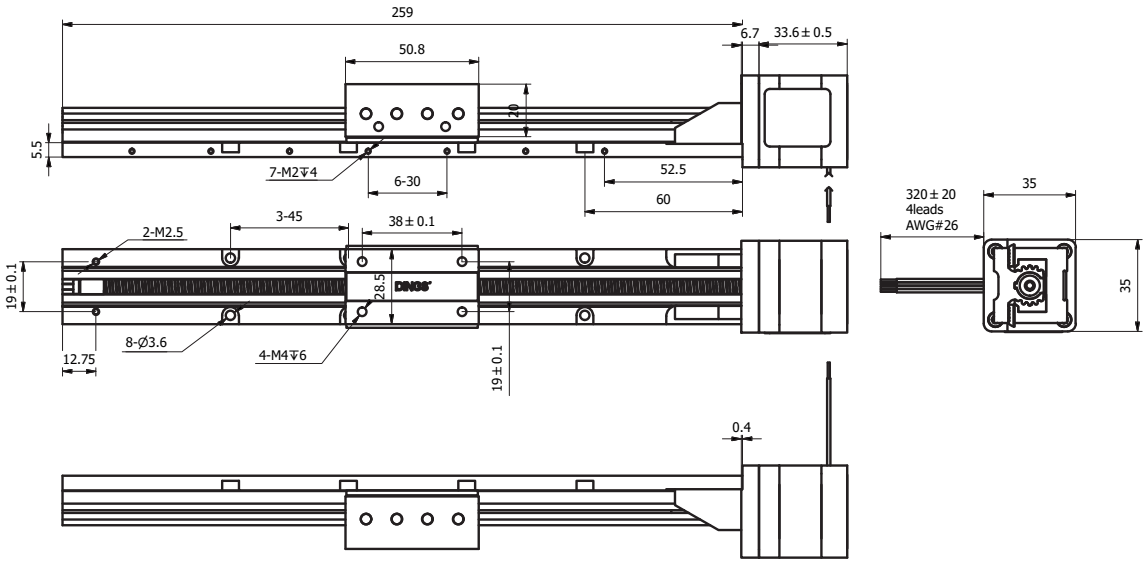

As the DSLM module uses sliding friction, please check the standard linear thrust data and allow a 1–2 kg margin in product selection.

Size 42mm DSLM

DINGS' DSLM Series in NEMA Size 17 [42mm] offers excellent linear speed and precise positioning performance.

Using spline slide rail as linear guide, it maximizes travel distance as max. 900mm stroke and ensures stable slider movement.

The DSLM series offers Teflon coating for a longer life cycle and employs a fixed half-nut structure to drive the slide, providing stable operation.

Motor Characteristics

Motor	Voltage (V)	Current (A [RMS])	Resistance (Ω)	Inductance (mH)	Lead wires	Motor length (mm)
17E2105	7.2	0.5	14.4	19.8	4	34.1
17E2110	3.8	1.0	3.8	5.0	4	34.1
17E2115	2.85	1.5	1.9	2.2	4	34.1
17E2205	11.0	0.5	22	46	4	48.1
17E2212	4.5	1.2	3.8	8.0	4	48.1
17E2225	2.5	2.5	1.0	1.8	4	48.1

Available Lead Screw and Travel per Step

Screw Dia. (inch)	Screw Dia. (mm)	Lead (inch)	Lead (mm)	Lead Code	Travel Per Step @1.8° (mm)*
0.25	6.35	0.2	5.08	R	0.0254

Dimensional Drawings

Available Stroke Selection

Stroke (mm)	Base Length
50	126
100	176
150	226
200	276
250	326
300	376
350	426
400	476
450	526
500	576

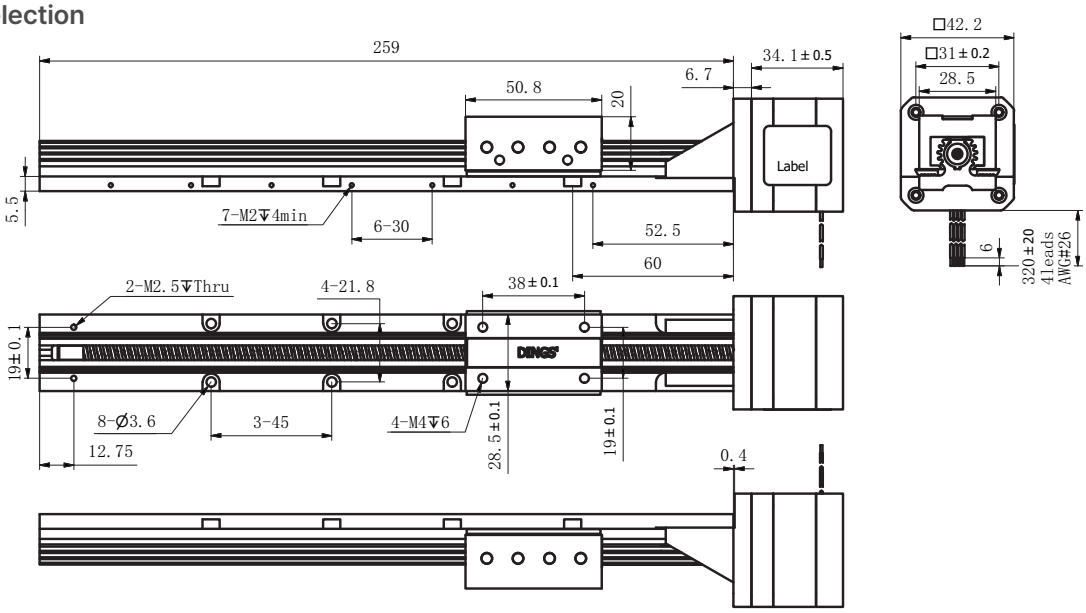

As the DSLM module uses sliding friction, please check the standard linear thrust data and allow a 1–2 kg margin in product selection.

Size 57mm DSLM

DINGS' DSLM Series in NEMA Size 23 [57mm] offers excellent linear speed and precise positioning performance.

Using spline slide rail as linear guide, it maximizes travel distance as max. 900mm stroke and ensures stable slider movement.

The DSLM series offers Teflon coating for a longer life cycle and employs a fixed half-nut structure to drive the slide, providing stable operation.

Motor Characteristics

Motor	Voltage (V)	Current (A [RMS])	Resistance (Ω)	Inductance (mH)	Lead wires	Motor length (mm)
23E2110	6.4	1.0	6.4	16.4	4	45
23E2120	3.2	2.0	1.75	4.1	4	45
23E2130	2.4	3.0	0.8	1.7	4	45
23E2210	10.8	1.0	11.5	32	4	65
23E2225	4.2	2.5	2.0	5.2	4	65
23E2240	2.8	4.0	0.7	2.0	4	65

Available Lead Screw and Travel per Step

Screw Dia. (inch)	Screw Dia. (mm)	Lead (inch)	Lead (mm)	Lead Code	Travel Per Step @1.8° (mm)*
0.25	6.35	0.2	5.08	R	0.0254

Dimensional Drawings

Available Stroke Selection

Stroke (mm)	Base Length
50	126
100	176
150	226
200	276
250	326
300	376
350	426
400	476
450	526
500	576

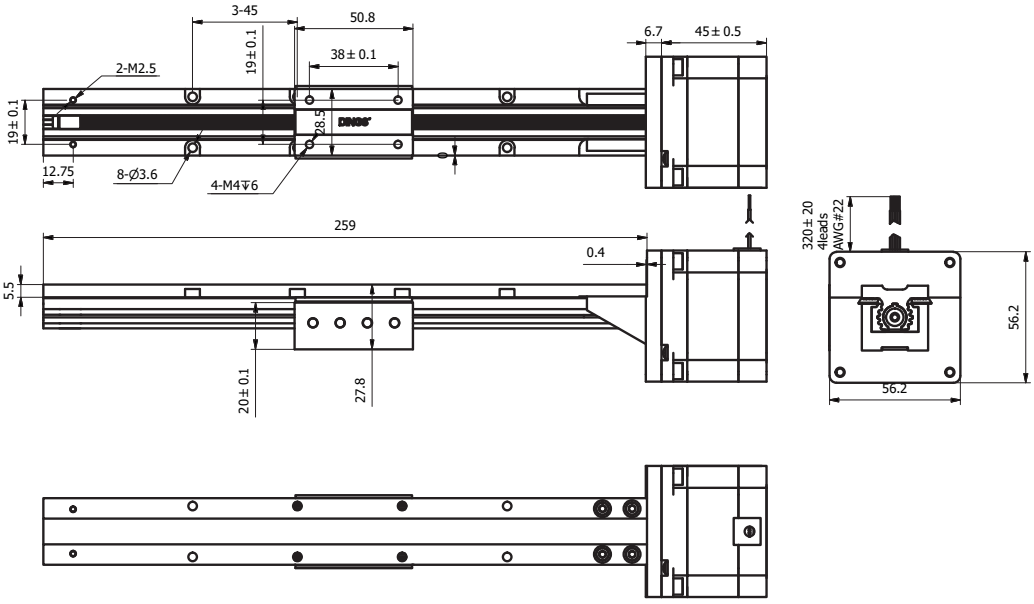

As the DSLM module uses sliding friction, please check the standard linear thrust data and allow a 1–2 kg margin in product selection.

DWM Series

The DWM series is designed and updated based on the DLM series of DINGS' simple modules.

It features newly added guide rails and limit designs, making the structure more stable and suitable for high-precision and high-load scenarios. It offers customers diversified and integrated solutions.

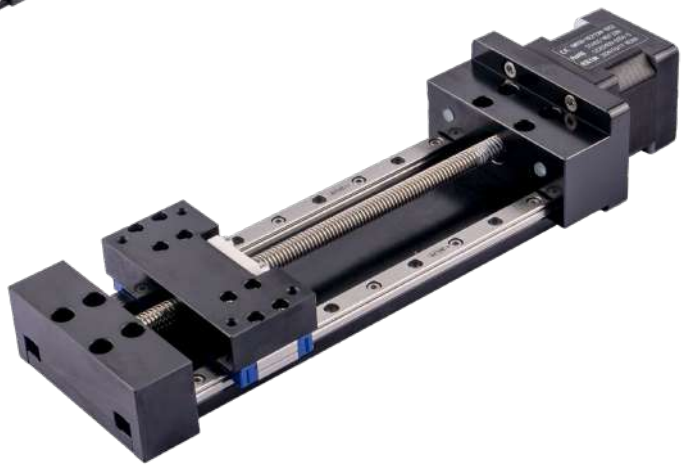

Part number construction	I-52
20 mm	I-53
28 mm	I-56
35 mm	I-59
42 mm	I-63
57 mm	I-67

Part Number Construction

DWM 100 - 17 E 2 1 10 S 4 - EK7D - 001

① DWM ② 100 ③ 17 ④ E ⑤ 2 ⑥ 1 ⑦ 10 ⑧ S ⑨ 4 ⑩ EK7D ⑪ 001

① Product Name

DWM Series Module

② Stroke (mm)

100 = 100mm

③ Motor Size

Motor Size (mm)	20	28	35	42	57
Motor Size (NEMA)	8	11	14	17	23

④ Motor Type

E = External type

⑤ Motor Step Angle

2 = 2-phase, 1.8° step angle

4 = 2-phase, 0.9° step angle

⑥ Motor Length

1 = Single stack

2 = Double stack

⑦ Rated Current / Phase

XX = X.X (A) / Phase

⑧ Lead Screw Code

Please refer to the lead screw code selection table

⑨ Number of Lead Wires

4 = 4-wire leads

6 = 6-wire leads

⑩ Option

EKX = Encoder

P = Manual Knob

B = Brake

X = Rear Shaft

R = Encoder Ready

C = Customization

N = No rear-end machining

⑪ Customer Sequence Number

Example

Part Number	DWM100-17E2110S4-EK7D-001
Description	DWM Linear Module 100mm Stroke NEMA 17 External Linear Actuator 2-phase / 1.8° Stepper Single Stack 1.0A / Phase S Lead (0.25" or 6.35mm) 4-wire leads EK7D Encoder with differential output 1,000 lines Serial Number 001

Size 20mm DWM

Motor Characteristics

Motor	Voltage (V)	Current (A [RMS])	Resistance (Ω)	Inductance (mH)	Lead Wire No.	Motor Length (mm)
8E2105	2.5	0.5	5.1	1.5	4	27.2
8E2205	4.4	0.5	8.8	2.7	4	38.1

Available Lead Screw and Travel per Step

Screw Dia. (inch)	Screw Dia. (mm)	Lead (inch)	Lead (mm)	Lead Code	Travel Per Step @1.8° (mm)*
0.138	3.5	0.0118	0.3	AF	0.0015
0.138	3.5	0.024	0.6096	AA	0.003048
0.128	3.24	0.0394	1	AB	0.005
0.138	3.5	0.048	1.2192	B	0.006096
0.138	3.5	0.0787	2	G	0.01
0.138	3.5	0.096	2.4384	J	0.012192
0.138	3.5	0.1575	4	M	0.02
0.138	3.5	0.315	8	T	0.04

Mechanical Specifications

Model	C100B(dyn)(kN)	Co(stat)(kN)	Mro(Nm)	Mpo(Nm)	Myo(Nm)
DWM 20	0.51	0.87	1.18	2.4	2.4

For customized options, please contact DINGS' or your local distributor

Size 20mm DWM

Dimensional Drawings

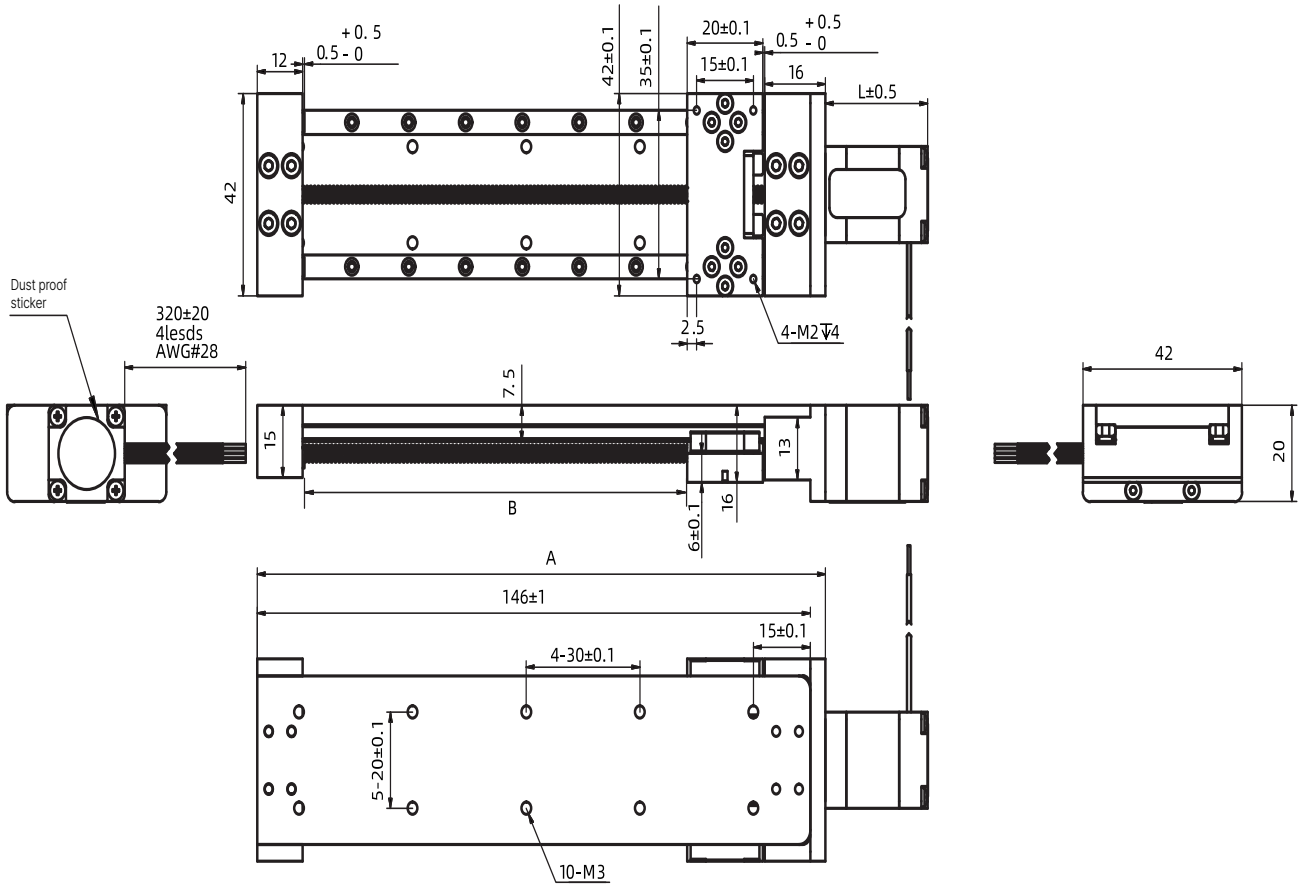

Available Stroke Selection

Size A (mm)	Stroke B (mm)	Weight (kg)	
		Single stack	Double stack
70	20	0.145	0.168
90	40	0.159	0.182
110	60	0.173	0.196
130	80	0.186	0.209
150	100	0.200	0.223
170	150	0.235	0.258
190	200	0.270	0.293

* Weight values are for reference only and may vary with actual configuration.

Note : All drawings are 1st-angle projection - ISO Compliant (3D models available)

Speed Thrust Curves

Size 8 Single Stack Speed Thrust Curves

kg ※Bipolar chopper constant current drive operating current 0.5A(RMS)

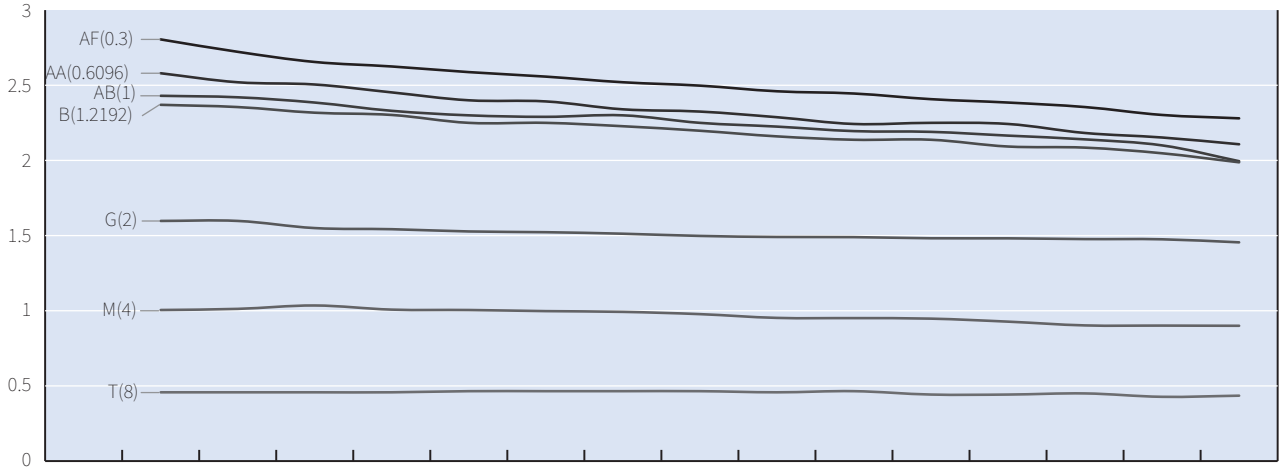

T(mm/s)	4	8	12	16	24	32	40	48	64	80	96	120	144	160	200
M(mm/s)	2	4	6	8	12	16	20	24	32	40	48	60	72	80	100
G(mm/s)	1	2	3	4	6	8	10	12	16	20	24	30	36	40	50
B(mm/s)	0.6	1.2	1.8	2.4	3.7	4.9	6.1	7.3	9.8	12.2	14.6	18.3	22	24.4	30.5
AB(mm/s)	0.5	1	1.5	2	3	4	5	6	8	10	12	15	18	20	25
AA(mm/s)	0.3	0.6	0.9	1.2	1.8	2.4	3.1	3.7	4.9	6.1	7.3	9.1	11	12.2	15.2
AF(mm/s)	0.15	0.3	0.45	0.6	0.9	1.2	1.5	1.8	2.4	3	3.6	4.5	5.4	6	7.5
Speed r/min	30	60	90	120	180	240	300	360	480	600	720	900	1080	1200	1500
Pulse pps	100	200	300	400	600	800	1000	1200	1600	2000	2400	3000	3600	4000	5000

Size 8 Double Stack Speed Thrust Curves

kg ※Bipolar chopper constant current drive operating current 0.5A(RMS)

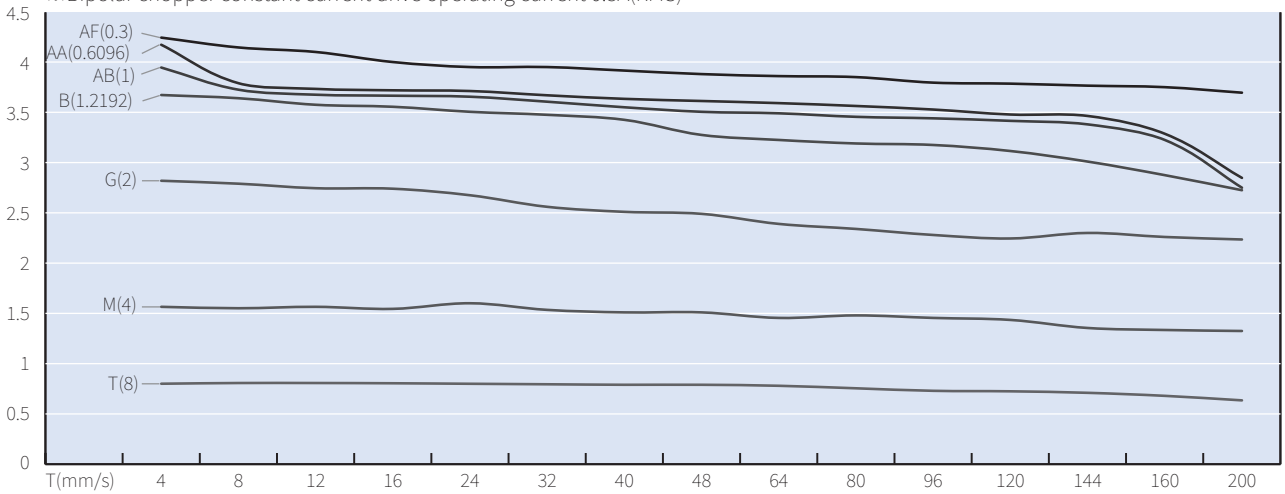

T(mm/s)	4	8	12	16	24	32	40	48	64	80	96	120	144	160	200
M(mm/s)	2	4	6	8	12	16	20	24	32	40	48	60	72	80	100
G(mm/s)	1	2	3	4	6	8	10	12	16	20	24	30	36	40	50
B(mm/s)	0.6	1.2	1.8	2.4	3.7	4.9	6.1	7.3	9.8	12.2	14.6	18.3	21.9	24.4	30.5
AB(mm/s)	0.5	1	1.5	2	3	4	5	6	8	10	12	15	18	20	25
AA(mm/s)	0.3	0.6	0.9	1.2	1.8	2.4	3.0	3.7	4.9	6.1	7.3	9.1	11.0	12.2	15.2
AF(mm/s)	0.2	0.3	0.5	0.6	0.9	1.2	1.5	1.8	2.4	3.0	3.6	4.5	5.4	6.0	7.5
Speed r/min	30	60	90	120	180	240	300	360	480	600	720	900	1080	1200	1500
Pulse pps	100	200	300	400	600	800	1000	1200	1600	2000	2400	3000	3600	4000	5000

TEST CONDITION

Testing Voltage: 24Vdc, Driver Model: DS-OLS2-FPD bipolar, chopper driver at rated current (rms).
Motor thrust may vary depending on voltage and driver conditions. 50% thrust margin is recommended.

Slze 28mm DWM

Motor Characteristics

Motor	Voltage (V)	Current (A [RMS])	Resistance (Ω)	Inductance (mH)	Lead wires	Motor length (mm)
11E2105	4.55	0.5	9.1	6	4	33.35
11E2110	2.1	1	2.1	1.5	4	33.35
11E2209	3.9	0.95	4.1	4	4	45
11E2216	2.4	1.6	1.5	1.3	4	45

Available Lead Screw and Travel per Step

Screw Dia. (inch)	Screw Dia. (mm)	Lead (inch)	Lead (mm)	Lead Code	Travel Per Step @1.8° (mm)*
0.188	4.77	0.0125	0.3175	AL	0.0016
0.188	4.77	0.025	0.635	A	0.003175
0.188	4.77	0.05	1.27	D	0.00635
0.188	4.77	0.0625	1.5875	F	0.0079
0.188	4.77	0.1	2.54	K	0.0127
0.188	4.77	0.192	4.8768	Q	0.0244
0.188	4.77	0.2	5.08	R	0.0254
0.188	4.77	0.4	10.16	X	0.0508

Mechanical Specifications

Model	C100B(dyn)(kN)	Co(stat)(kN)	Mro(Nm)	Mpo(Nm)	Myo(Nm)
DWM 28	1.38	2.08	3.8	7.9	7.9

For customized options, please contact DINGS' or your local distributor

Size 28mm DWM

Dimensional Drawings

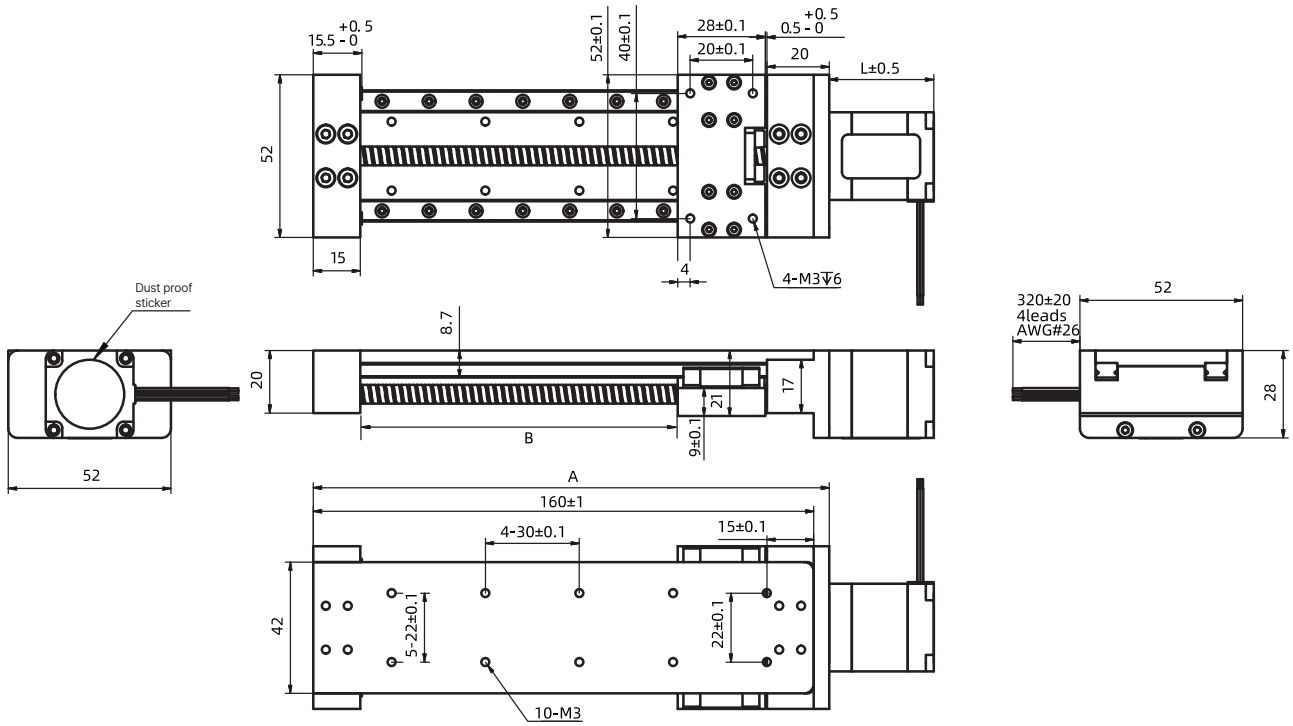

Available Stroke Selection

Size A (mm)	Stroke B (mm)	Weight (kg)	
		Single stack	Double stack
85	20	0.315	0.371
105	40	0.337	0.393
125	60	0.359	0.415
145	80	0.381	0.437
165	100	0.403	0.459
215	150	0.458	0.514
265	200	0.513	0.569
315	250	0.568	0.624
365	300	0.623	0.679

* Weight values are for reference only and may vary with actual configuration.

Size 28mm DWM

Speed Thrust Curves

Size 11 Single Stack Speed Thrust Curves

※Bipolar chopper constant current drive operating current 1A(RMS)

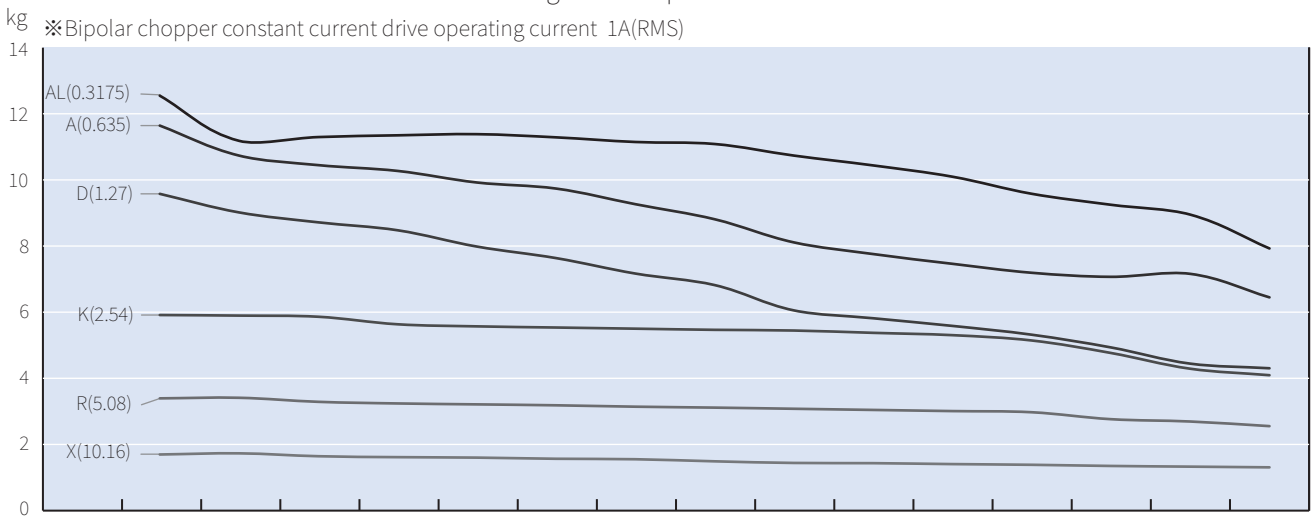

X(mm/s)	5.08	10.16	15.24	20.32	30.48	40.64	50.8	60.96	81.28	101.6	121.92	152.4	182.88	203.2	254
R(mm/s)	2.54	5.08	7.62	10.16	15.24	20.32	25.4	30.48	40.64	50.8	60.96	76.2	91.44	101.6	127
K(mm/s)	1.27	2.54	3.81	5.08	7.62	10.16	12.7	15.24	20.32	25.4	30.48	38.1	45.72	50.8	63.5
D(mm/s)	0.64	1.27	1.91	2.54	3.81	5.08	6.35	7.62	10.16	12.7	15.24	19.05	22.86	25.4	31.75
A(mm/s)	0.32	0.64	0.95	1.27	1.91	2.54	3.18	3.81	5.08	6.35	7.62	9.53	11.43	12.7	15.88
AL(mm/s)	0.15	0.3	0.45	0.6	0.9	1.2	1.5	1.8	2.4	3	3.6	4.5	5.4	6	7.5
Speed r/min	30	60	90	120	180	240	300	360	480	600	720	900	1080	1200	1500
Pulse pps	100	200	300	400	600	800	1000	1200	1600	2000	2400	3000	3600	4000	5000

Size 11 Double Stack Speed Thrust Curves

※Bipolar chopper constant current drive operating current 1.6A(RMS)

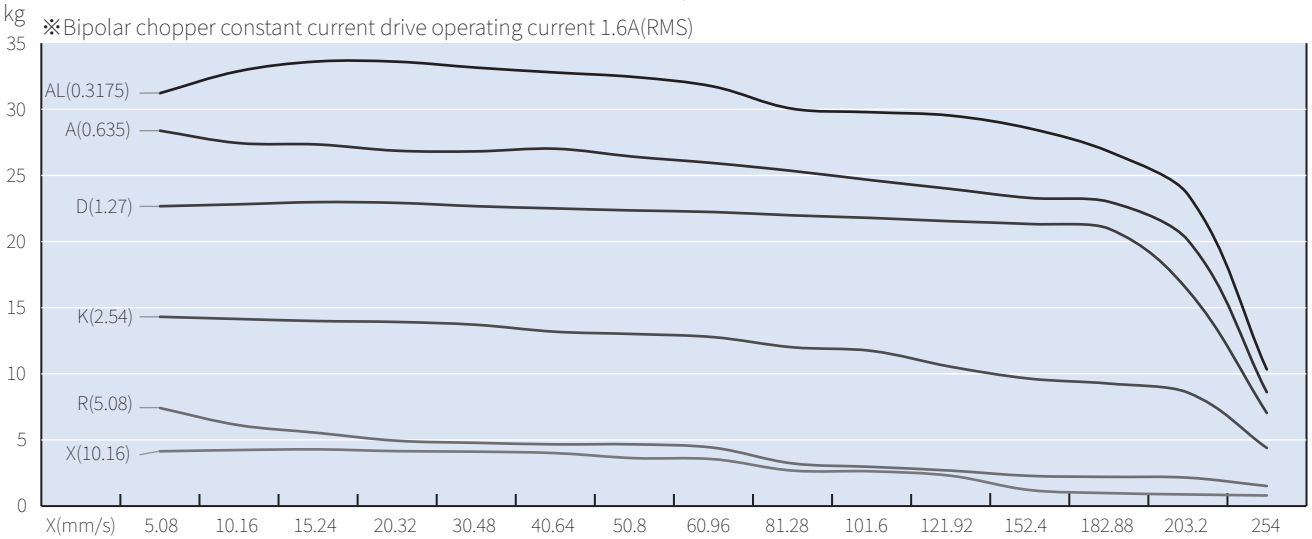

X(mm/s)	5.08	10.16	15.24	20.32	30.48	40.64	50.8	60.96	81.28	101.6	121.92	152.4	182.88	203.2	254
R(mm/s)	2.54	5.08	7.62	10.16	15.24	20.32	25.4	30.48	40.64	50.8	60.96	76.2	91.44	101.6	127
K(mm/s)	1.27	2.54	3.81	5.08	7.62	10.16	12.7	15.24	20.32	25.4	30.48	38.1	45.72	50.8	63.5
D(mm/s)	0.64	1.27	1.91	2.54	3.81	5.08	6.35	7.62	10.16	12.7	15.24	19.05	22.86	25.4	31.75
A(mm/s)	0.32	0.64	0.95	1.27	1.91	2.54	3.18	3.81	5.08	6.35	7.62	9.53	11.43	12.7	15.88
AL(mm/s)	0.15	0.3	0.45	0.6	0.9	1.2	1.5	1.8	2.4	3	3.6	4.5	5.4	6	7.5
Speed r/min	30	60	90	120	180	240	300	360	480	600	720	900	1080	1200	1500
Pulse pps	100	200	300	400	600	800	1000	1200	1600	2000	2400	3000	3600	4000	5000

TEST CONDITION

Testing Voltage: 24Vdc, Driver Model: DS-OLS2-FPD bipolar, chopper driver at rated current (rms).
Motor thrust may vary depending on voltage and driver conditions. 50% thrust margin is recommended.

Size 35mm DWM

Motor Characteristics

Motor	Voltage (V)	Current (A [RMS])	Resistance (Ω)	Inductance (mH)	Lead wires	Motor length (mm)
14E2105	6.6	0.5	13.2	14	4	33.6
14E2110	3.5	1	3.5	3.6	4	33.6
14E2115	2.7	1.5	1.8	1.9	4	33.6
14E2205	12	0.5	24	29	4	45.6
14E2210	6	1	6	7.2	4	45.6
14E2215	4	1.5	2.7	3.2	4	45.6

Available Lead Screw and Travel per Step

Screw Dia. (inch)	Screw Dia. (mm)	Lead (inch)	Lead (mm)	Lead Code	Travel Per Step @1.8° (mm)*
0.25	6.35	0.024	0.6096	AA	0.003048
0.25	6.35	0.0394	1	AB	0.005
0.25	6.35	0.025	0.635	A	0.003175
0.25	6.35	0.048	1.2192	B	0.006096
0.25	6.35	0.05	1.27	D	0.00635
0.25	6.35	0.0625	1.5875	F	0.0079
0.25	6.35	0.096	2.4384	J	0.0122
0.25	6.35	0.1	2.54	K	0.0127
0.25	6.35	0.125	3.175	L	0.0159
0.25	6.35	0.192	4.8768	Q	0.024
0.25	6.35	0.2	5.08	R	0.0254
0.25	6.35	0.25	6.35	S	0.0318
0.25	6.35	0.333	8.4667	U	0.0423
0.25	6.35	0.384	9.7536	W	0.0488
0.25	6.35	0.5	12.7	Y	0.0635
0.25	6.35	1	25.4	Z	0.127
0.315	8	0.1575	4	M	0.02
0.315	8	0.315	8	T	0.04
0.315	8	0.0787	2	G	0.01
0.315	8	0.3937	10	C	0.05

For customized options, please contact DINGS' or your local distributor

Size 35mm DWM

Mechanical Specifications

Model	C100B(dyn)(kN)	Co(stat)(kN)	Mro(Nm)	Mpo(Nm)	Myo(Nm)
DWM 35	1.38	2.08	3.8	7.9	7.9

Dimensional Drawings

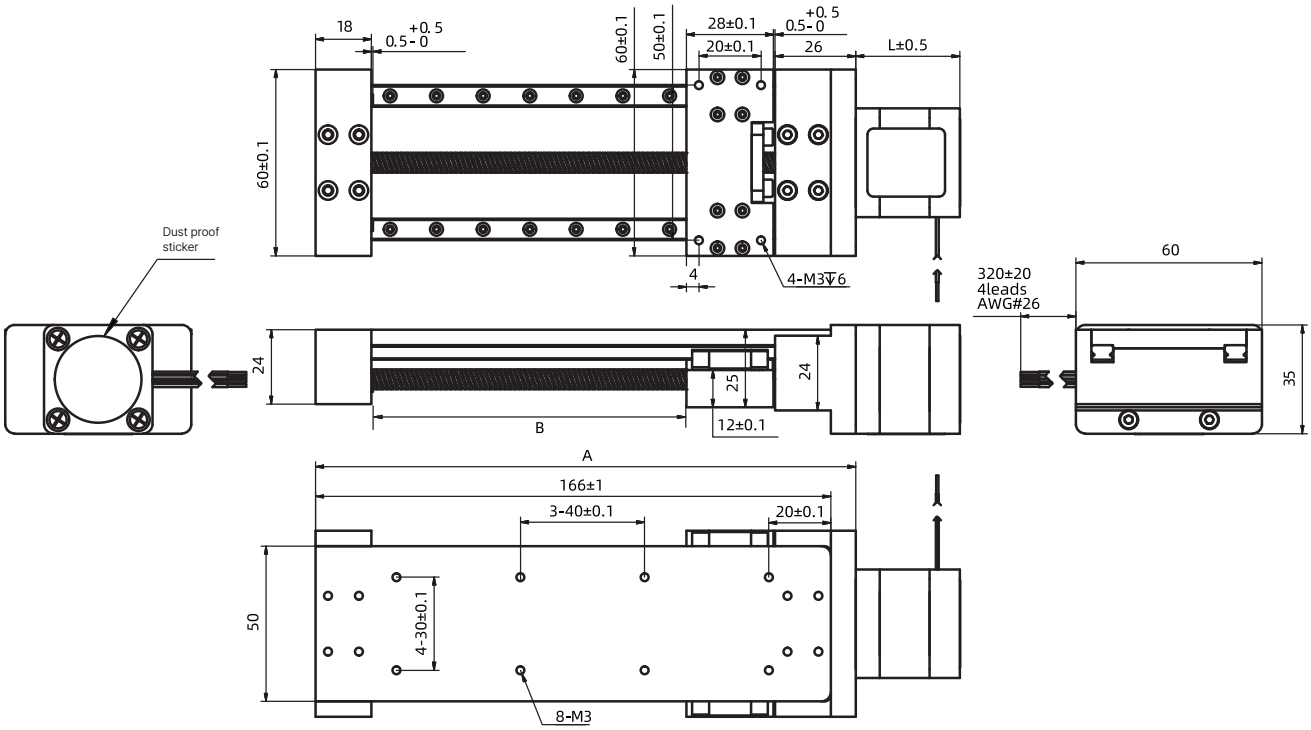

Available Stroke Selection

Size A (mm)	Stroke B (mm)	Weight (kg)	
		Single stack	Double stack
124	50	0.522	0.543
174	100	0.593	0.614
224	150	0.665	0.686
274	200	0.736	0.757
324	250	0.807	0.828
374	300	0.879	0.900
424	350	0.950	0.971
474	400	1.021	1.042
524	450	1.092	1.113
574	500	1.163	1.184

* Weight values are for reference only and may vary with actual configuration.

Speed Thrust Curves

Size 14 Single Stack Speed Thrust Curves

※Bipolar chopper constant current drive operating current 1.5A(RMS)

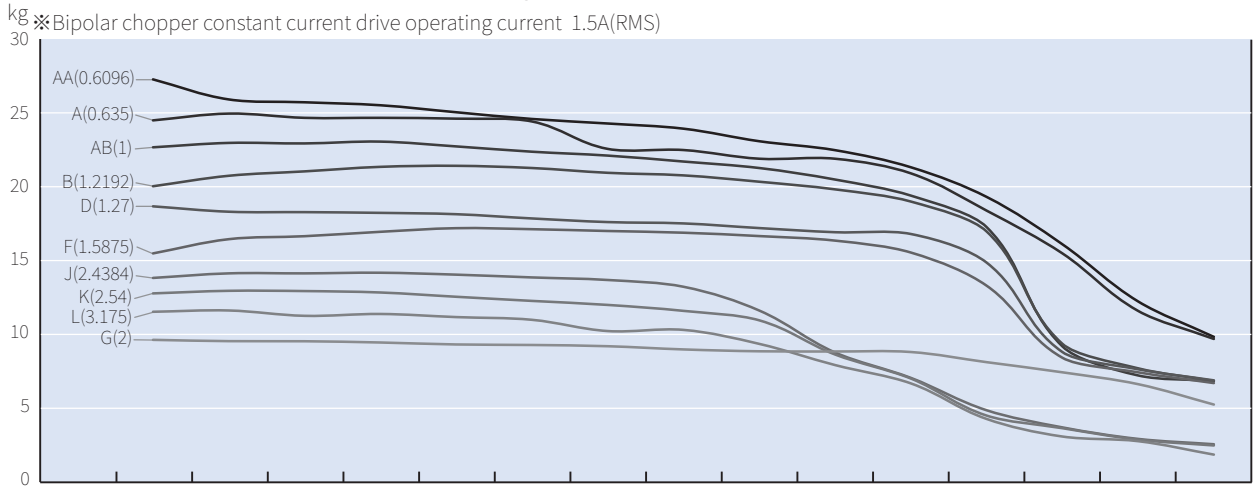

G(mm/s)	1	2	3	4	6	8	10	12	16	20	24	30	36	40	50
L(mm/s)	1.59	3.18	4.76	6.35	9.53	12.7	15.88	19.05	25.4	31.75	38.1	47.63	57.15	63.5	79.38
K(mm/s)	1.27	2.54	3.81	5.08	7.62	10.16	12.7	15.24	20.32	25.4	30.48	38.1	45.72	50.8	63.5
J(mm/s)	1.22	2.44	3.66	4.88	7.32	9.75	12.19	14.63	19.51	24.38	29.26	36.58	43.89	48.77	60.96
F(mm/s)	0.79	1.59	2.38	3.18	4.76	6.35	7.94	9.53	12.7	15.88	19.05	23.81	28.58	31.75	39.69
D(mm/s)	0.64	1.27	1.91	2.54	3.81	5.08	6.35	7.62	10.16	12.7	15.24	19.05	22.86	25.4	31.75
B(mm/s)	0.61	1.22	1.83	2.44	3.66	4.88	6.1	7.32	9.75	12.19	14.63	18.29	21.95	24.38	30.48
AB(mm/s)	0.5	1	1.5	2	3	4	5	6	8	10	12	15	18	20	25
A(mm/s)	0.32	0.64	0.95	1.27	1.91	2.54	3.18	3.81	5.08	6.35	7.62	9.53	11.43	12.70	15.88
AA(mm/s)	0.30	0.61	0.91	1.22	1.83	2.44	3.05	3.66	4.88	6.10	7.32	9.14	10.97	12.19	15.24
Speed r/min	30	60	90	120	180	240	300	360	480	600	720	900	1080	1200	1500
Pulse pps	100	200	300	400	600	800	1000	1200	1600	2000	2400	3000	3600	4000	5000

Size 14 Single Stack Speed Thrust Curves

※Bipolar chopper constant current drive operating current 1.5A(RMS)

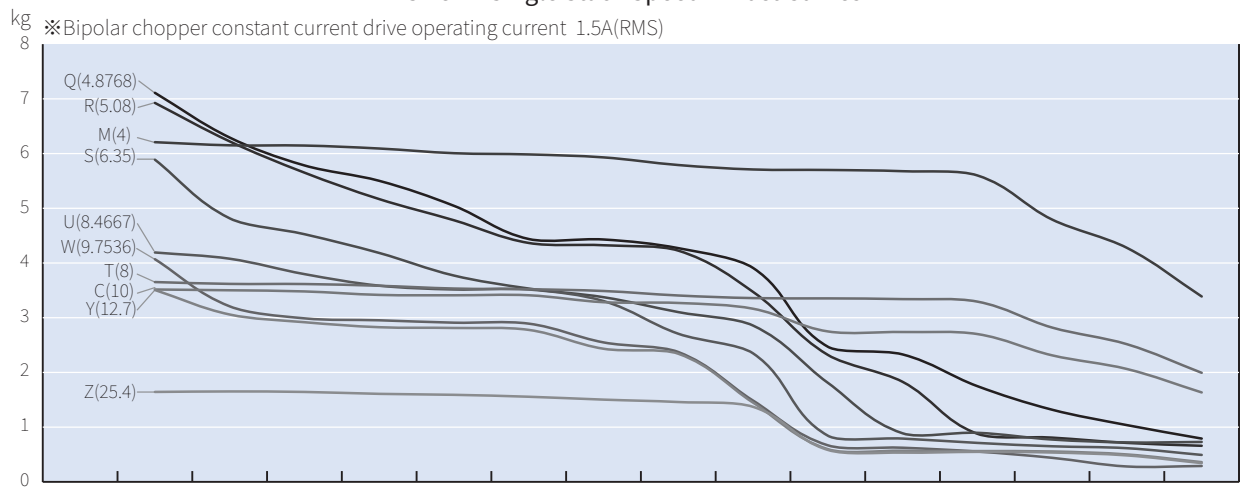

Z(mm/s)	12.7	25.4	38.1	50.8	76.2	101.6	127	152.4	203.2	254	304.8	381	457.2	508	635
Y(mm/s)	6.35	12.7	19.05	25.4	38.1	50.8	63.5	76.2	101.6	127	152.4	190.5	228.6	254	317.5
C(mm/s)	5	10	15	20	30	40	50	60	80	100	120	150	180	200	250
T(mm/s)	4	8	12	16	24	32	40	48	64	80	96	120	144	160	200
W(mm/s)	4.88	9.75	14.63	19.51	29.26	39.01	48.77	58.52	78.03	97.54	117.04	146.3	175.56	195.07	243.84
U(mm/s)	4.23	8.47	12.7	16.93	25.4	33.87	42.33	50.8	67.73	84.67	101.6	127	152.4	169.33	211.67
S(mm/s)	3.18	6.35	9.53	12.7	19.05	25.4	31.75	38.1	50.8	63.5	76.2	95.25	114.3	127	158.75
M(mm/s)	2	4	6	8	12	16	20	24	32	40	48	60	72	80	100
R(mm/s)	2.54	5.08	7.62	10.16	15.24	20.32	25.4	30.48	40.64	50.8	60.96	76.2	91.44	101.6	127
Q(mm/s)	2.44	4.88	7.32	9.75	14.63	19.51	24.38	29.26	39.01	48.77	58.52	73.15	87.78	97.54	121.92
Speed r/min	30	60	90	120	180	240	300	360	480	600	720	900	1080	1200	1500
Pulse pps	100	200	300	400	600	800	1000	1200	1600	2000	2400	3000	3600	4000	5000

TEST CONDITION

Testing Voltage: 24Vdc, Driver Model: DS-OLS2-FPD bipolar, chopper driver at rated current (rms).
Motor thrust may vary depending on voltage and driver conditions. 50% thrust margin is recommended.

Size 35mm DWM

Size 14 Double Stack Speed Thrust Curves

※Bipolar chopper constant current drive operating current 1.5A(RMS)

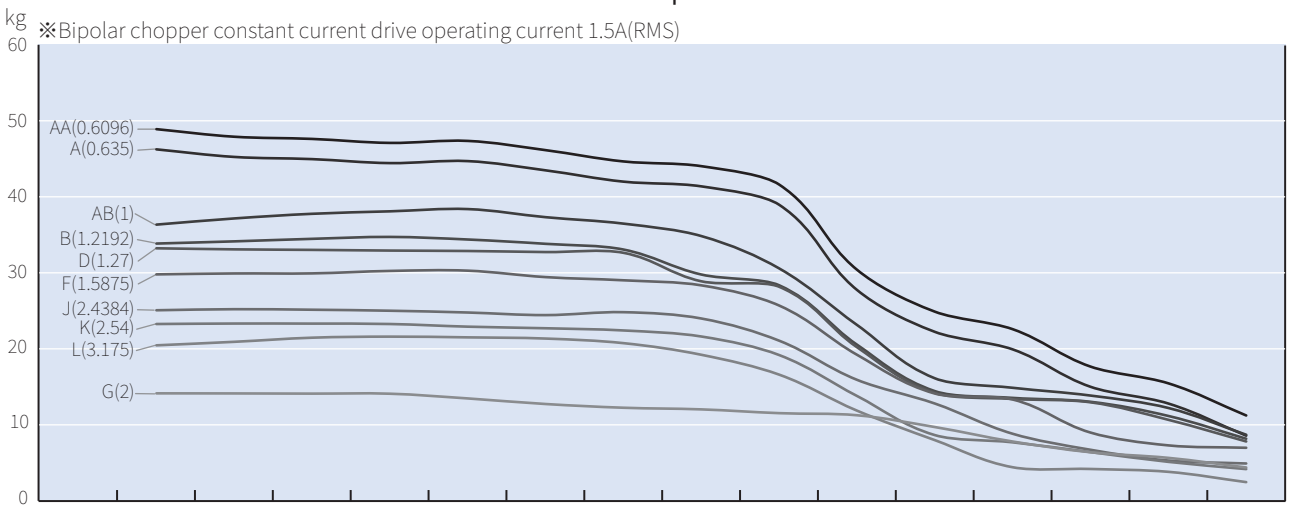

G(mm/s)	1	2	3	4	6	8	10	12	16	20	24	30	36	40	50
L(mm/s)	1.59	3.18	4.76	6.35	9.53	12.7	15.88	19.05	25.4	31.75	38.1	47.63	57.15	63.5	79.38
K(mm/s)	1.27	2.54	3.81	5.08	7.62	10.16	12.7	15.24	20.32	25.4	30.48	38.1	45.72	50.8	63.5
J(mm/s)	1.22	2.44	3.66	4.88	7.32	9.75	12.19	14.63	19.51	24.38	29.26	36.58	43.89	48.77	60.96
F(mm/s)	0.79	1.59	2.38	3.18	4.76	6.35	7.94	9.53	12.7	15.88	19.05	23.81	28.58	31.75	39.69
D(mm/s)	0.64	1.27	1.91	2.54	3.81	5.08	6.35	7.62	10.16	12.7	15.24	19.05	22.86	25.4	31.75
B(mm/s)	0.61	1.22	1.83	2.44	3.66	4.88	6.1	7.32	9.75	12.19	14.63	18.29	21.95	24.38	30.48
AB(mm/s)	0.5	1	1.5	2	3	4	5	6	8	10	12	15	18	20	25
A(mm/s)	0.32	0.64	0.95	1.27	1.91	2.54	3.18	3.81	5.08	6.35	7.62	9.53	11.43	12.70	15.88
AA(mm/s)	0.30	0.61	0.91	1.22	1.83	2.44	3.05	3.66	4.88	6.10	7.32	9.14	10.97	12.19	15.24
Speed r/min	30	60	90	120	180	240	300	360	480	600	720	900	1080	1200	1500
Pulse pps	100	200	300	400	600	800	1000	1200	1600	2000	2400	3000	3600	4000	5000

Size 14 Double Stack Speed Thrust Curves

※Bipolar chopper constant current drive operating current 1.5A(RMS)

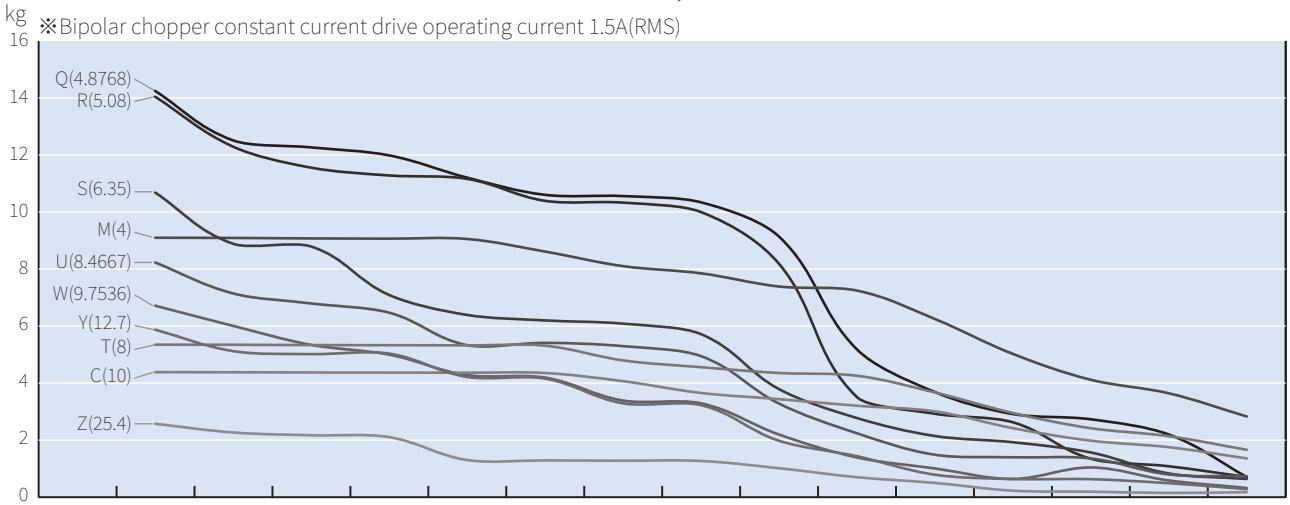

Z(mm/s)	12.7	25.4	38.1	50.8	76.2	101.6	127	152.4	203.2	254	304.8	381	457.2	508	635
Y(mm/s)	6.35	12.7	19.05	25.4	38.1	50.8	63.5	76.2	101.6	127	152.4	190.5	228.6	254	317.5
C(mm/s)	5	10	15	20	30	40	50	60	80	100	120	150	180	200	250
T(mm/s)	4	8	12	16	24	32	40	48	64	80	96	120	144	160	200
W(mm/s)	4.88	9.75	14.63	19.51	29.26	39.01	48.77	58.52	78.03	97.54	117.04	146.3	175.56	195.07	243.84
U(mm/s)	4.23	8.47	12.7	16.93	25.4	33.87	42.33	50.8	67.73	84.67	101.6	127	152.4	169.33	211.67
S(mm/s)	3.18	6.35	9.53	12.7	19.05	25.4	31.75	38.1	50.8	63.5	76.2	95.25	114.3	127	158.75
M(mm/s)	2	4	6	8	12	16	20	24	32	40	48	60	72	80	100
R(mm/s)	2.54	5.08	7.62	10.16	15.24	20.32	25.4	30.48	40.64	50.8	60.96	76.2	91.44	101.6	127
Q(mm/s)	2.44	4.88	7.32	9.75	14.63	19.51	24.38	29.26	39.01	48.77	58.52	73.15	87.78	97.54	121.92
Speed r/min	30	60	90	120	180	240	300	360	480	600	720	900	1080	1200	1500
Pulse pps	100	200	300	400	600	800	1000	1200	1600	2000	2400	3000	3600	4000	5000

TEST CONDITION

Testing Voltage: 24Vdc, Driver Model: DS-OLS2-FPD bipolar, chopper driver at rated current (rms).
Motor thrust may vary depending on voltage and driver conditions. 50% thrust margin is recommended.

Size 42mm DWM

Motor Characteristics

Motor	Voltage (V)	Current (A [RMS])	Resistance (Ω)	Inductance (mH)	Lead wires	Motor length (mm)
17E2105	7.2	0.5	14.4	19.8	4	34.1
17E2110	3.8	1	3.8	5	4	34.1
17E2115	2.85	1.5	1.9	2.2	4	34.1
17E2205	11	0.5	22	46	4	48.1
17E2212	4.5	1.2	3.8	8	4	48.1
17E2225	2.5	2.5	1	1.8	4	48.1

Available Lead Screw and Travel per Step

Screw Dia. (inch)	Screw Dia. (mm)	Lead (inch)	Lead (mm)	Lead Code	Travel Per Step @1.8° (mm)*
0.25	6.35	0.024	0.6096	AA	0.003048
0.25	6.35	0.0394	1	AB	0.005
0.25	6.35	0.025	0.635	A	0.003175
0.25	6.35	0.048	1.2192	B	0.006096
0.25	6.35	0.05	1.27	D	0.00635
0.25	6.35	0.0625	1.5875	F	0.0079
0.25	6.35	0.096	2.4384	J	0.0122
0.25	6.35	0.1	2.54	K	0.0127
0.25	6.35	0.125	3.175	L	0.0159
0.25	6.35	0.192	4.8768	Q	0.024
0.25	6.35	0.2	5.08	R	0.0254
0.25	6.35	0.25	6.35	S	0.0318
0.25	6.35	0.333	8.4667	U	0.0423
0.25	6.35	0.384	9.7536	W	0.0488
0.25	6.35	0.5	12.7	Y	0.0635
0.25	6.35	1	25.4	Z	0.127
0.315	8	0.1575	4	M	0.02
0.315	8	0.315	8	T	0.04
0.315	8	0.0787	2	G	0.01
0.315	8	0.3937	10	C	0.05

For customized options, please contact DINGS' or your local distributor

Size 42mm DWM

Mechanical Specifications

Model	C100B(dyn)(kN)	Co(stat)(kN)	Mro(Nm)	Mpo(Nm)	Myo(Nm)
DWM 42	1.38	2.08	3.8	7.9	7.9

Dimensional Drawings

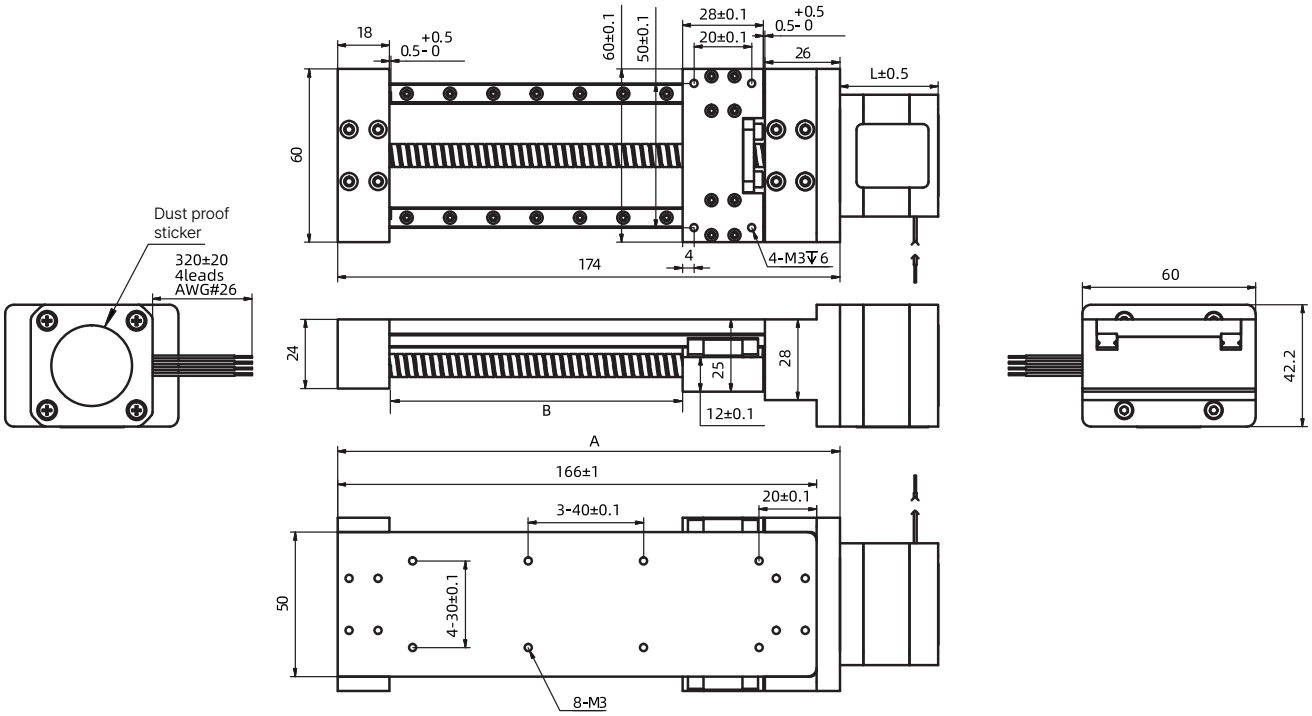

Available Stroke Selection

Size A (mm)	Stroke B (mm)	Weight (kg)	
		Single stack	Double stack
124	50	0.651	0.783
174	100	0.730	0.862
224	150	0.809	0.941
274	200	0.888	1.020
324	250	0.968	1.100
374	300	1.047	1.179
424	350	1.126	1.258
474	400	1.205	1.337
524	450	1.274	1.406
574	500	1.343	1.475

* Weight values are for reference only and may vary with actual configuration.

Size 42mm DWM

Speed Thrust Curves

Size 17 Single Stack Speed Thrust Curves

※Bipolar chopper constant current drive operating current 1.5A(RMS)

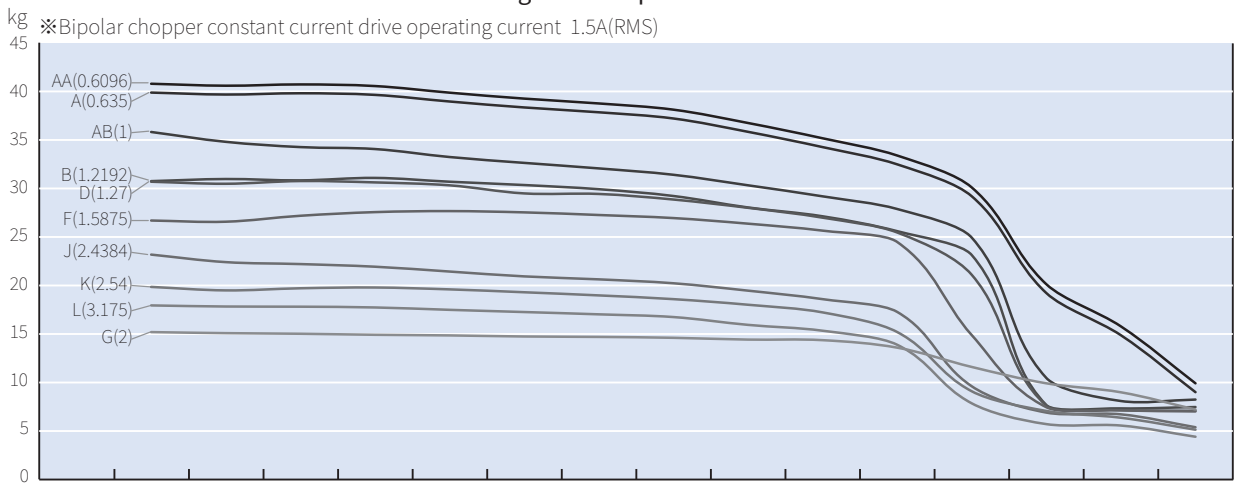

G(mm/s)	1	2	3	4	6	8	10	12	16	20	24	30	36	40	50
L(mm/s)	1.59	3.18	4.76	6.35	9.53	12.7	15.88	19.05	25.4	31.75	38.1	47.63	57.15	63.5	79.38
K(mm/s)	1.27	2.54	3.81	5.08	7.62	10.16	12.7	15.24	20.32	25.4	30.48	38.1	45.72	50.8	63.5
J(mm/s)	1.22	2.44	3.66	4.88	7.32	9.75	12.19	14.63	19.51	24.38	29.26	36.58	43.89	48.77	60.96
F(mm/s)	0.79	1.59	2.38	3.18	4.76	6.35	7.94	9.53	12.7	15.88	19.05	23.81	28.58	31.75	39.69
D(mm/s)	0.64	1.27	1.91	2.54	3.81	5.08	6.35	7.62	10.16	12.7	15.24	19.05	22.86	25.4	31.75
B(mm/s)	0.61	1.22	1.83	2.44	3.66	4.88	6.1	7.32	9.75	12.19	14.63	18.29	21.95	24.38	30.48
AB(mm/s)	0.5	1	1.5	2	3	4	5	6	8	10	12	15	18	20	25
A(mm/s)	0.32	0.64	0.95	1.27	1.91	2.54	3.18	3.81	5.08	6.35	7.62	9.53	11.43	12.70	15.88
AA(mm/s)	0.30	0.61	0.91	1.22	1.83	2.44	3.05	3.66	4.88	6.10	7.32	9.14	10.97	12.19	15.24
Speed r/min	30	60	90	120	180	240	300	360	480	600	720	900	1080	1200	1500
Pulse pps	100	200	300	400	600	800	1000	1200	1600	2000	2400	3000	3600	4000	5000

Size 17 Single Stack Speed Thrust Curves

※Bipolar chopper constant current drive operating current 1.5A(RMS)

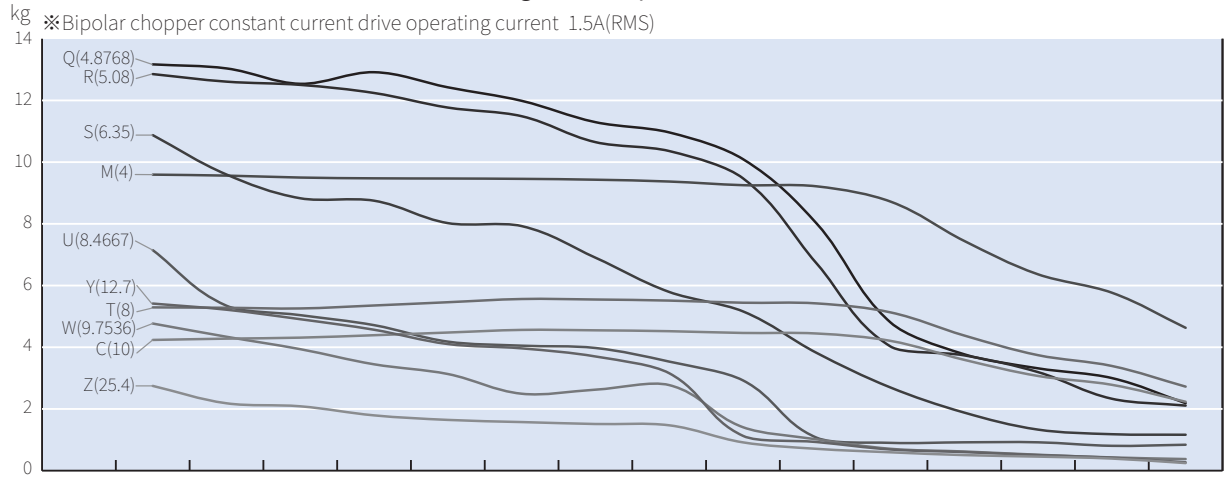

Z(mm/s)	12.7	25.4	38.1	50.8	76.2	101.6	127	152.4	203.2	254	304.8	381	457.2	508	635
Y(mm/s)	6.35	12.7	19.05	25.4	38.1	50.8	63.5	76.2	101.6	127	152.4	190.5	228.6	254	317.5
C(mm/s)	5	10	15	20	30	40	50	60	80	100	120	150	180	200	250
T(mm/s)	4	8	12	16	24	32	40	48	64	80	96	120	144	160	200
W(mm/s)	4.88	9.75	14.63	19.51	29.26	39.01	48.77	58.52	78.03	97.54	117.04	146.3	175.56	195.07	243.84
U(mm/s)	4.23	8.47	12.7	16.93	25.4	33.87	42.33	50.8	67.73	84.67	101.6	127	152.4	169.33	211.67
S(mm/s)	3.18	6.35	9.53	12.7	19.05	25.4	31.75	38.1	50.8	63.5	76.2	95.25	114.3	127	158.75
M(mm/s)	2	4	6	8	12	16	20	24	32	40	48	60	72	80	100
R(mm/s)	2.54	5.08	7.62	10.16	15.24	20.32	25.4	30.48	40.64	50.8	60.96	76.2	91.44	101.6	127
Q(mm/s)	2.44	4.88	7.32	9.75	14.63	19.51	24.38	29.26	39.01	48.77	58.52	73.15	87.78	97.54	121.92
Speed r/min	30	60	90	120	180	240	300	360	480	600	720	900	1080	1200	1500
Pulse pps	100	200	300	400	600	800	1000	1200	1600	2000	2400	3000	3600	4000	5000

TEST CONDITION

Testing Voltage: 24Vdc, Driver Model: DS-OLS2-FPD bipolar, chopper driver at rated current (rms).
Motor thrust may vary depending on voltage and driver conditions. 50% thrust margin is recommended.

Size 42mm DWM

Size 17 Double Stack Speed Thrust Curves

※Bipolar chopper constant current drive operating current 1.5A(RMS)

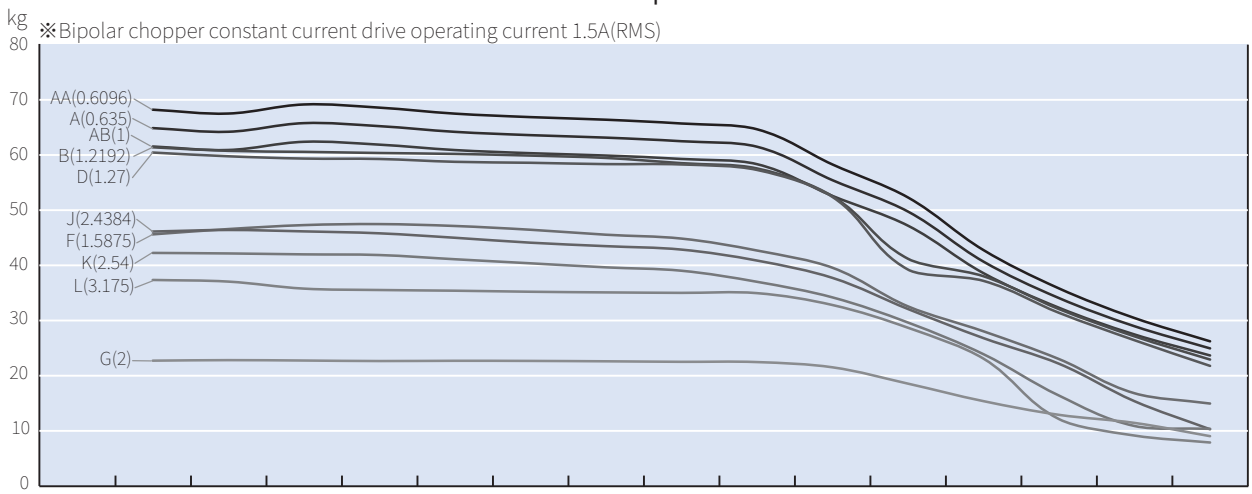

G(mm/s)	1	2	3	4	6	8	10	12	16	20	24	30	36	40	50
L(mm/s)	1.59	3.18	4.76	6.35	9.53	12.7	15.88	19.05	25.4	31.75	38.1	47.63	57.15	63.5	79.38
K(mm/s)	1.27	2.54	3.81	5.08	7.62	10.16	12.7	15.24	20.32	25.4	30.48	38.1	45.72	50.8	63.5
J(mm/s)	1.22	2.44	3.66	4.88	7.32	9.75	12.19	14.63	19.51	24.38	29.26	36.58	43.89	48.77	60.96
F(mm/s)	0.79	1.59	2.38	3.18	4.76	6.35	7.94	9.53	12.7	15.88	19.05	23.81	28.58	31.75	39.69
D(mm/s)	0.64	1.27	1.91	2.54	3.81	5.08	6.35	7.62	10.16	12.7	15.24	19.05	22.86	25.4	31.75
B(mm/s)	0.61	1.22	1.83	2.44	3.66	4.88	6.1	7.32	9.75	12.19	14.63	18.29	21.95	24.38	30.48
AB(mm/s)	0.5	1	1.5	2	3	4	5	6	8	10	12	15	18	20	25
A(mm/s)	0.32	0.64	0.95	1.27	1.91	2.54	3.18	3.81	5.08	6.35	7.62	9.53	11.43	12.70	15.88
AA(mm/s)	0.30	0.61	0.91	1.22	1.83	2.44	3.05	3.66	4.88	6.10	7.32	9.14	10.97	12.19	15.24
Speed r/min	30	60	90	120	180	240	300	360	480	600	720	900	1080	1200	1500
Pulse pps	100	200	300	400	600	800	1000	1200	1600	2000	2400	3000	3600	4000	5000

Size 17 Double Stack Speed Thrust Curves

※Bipolar chopper constant current drive operating current 1.5A(RMS)

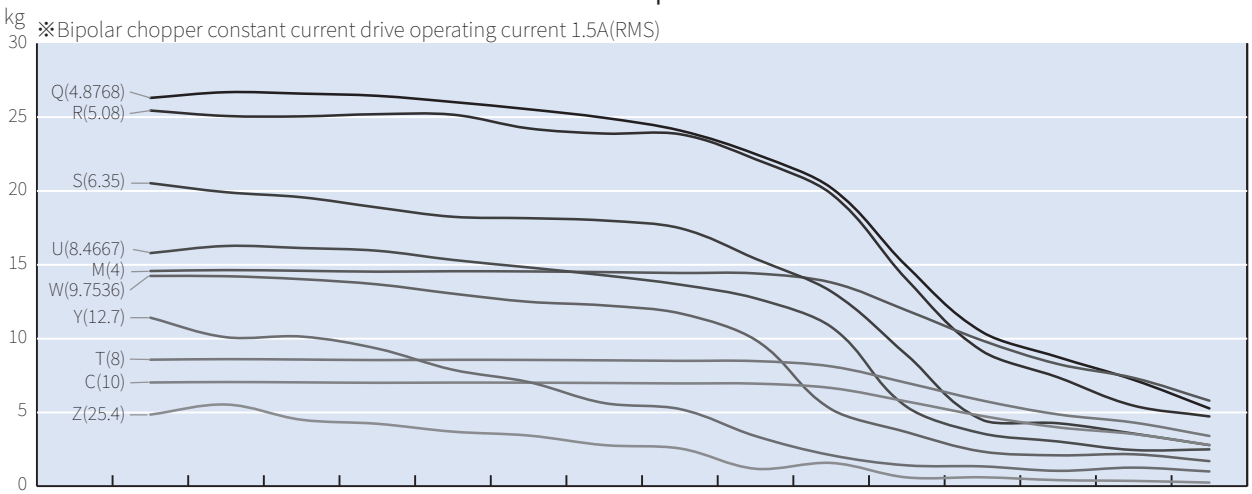

Z(mm/s)	12.7	25.4	38.1	50.8	76.2	101.6	127	152.4	203.2	254	304.8	381	457.2	508	635
Y(mm/s)	6.35	12.7	19.05	25.4	38.1	50.8	63.5	76.2	101.6	127	152.4	190.5	228.6	254	317.5
C(mm/s)	5	10	15	20	30	40	50	60	80	100	120	150	180	200	250
T(mm/s)	4	8	12	16	24	32	40	48	64	80	96	120	144	160	200
W(mm/s)	4.88	9.75	14.63	19.51	29.26	39.01	48.77	58.52	78.03	97.54	117.04	146.3	175.56	195.07	243.84
J(mm/s)	4.23	8.47	12.7	16.93	25.4	33.87	42.33	50.8	67.73	84.67	101.6	127	152.4	169.33	211.67
S(mm/s)	3.18	6.35	9.53	12.7	19.05	25.4	31.75	38.1	50.8	63.5	76.2	95.25	114.3	127	158.75
M(mm/s)	2	4	6	8	12	16	20	24	32	40	48	60	72	80	100
R(mm/s)	2.54	5.08	7.62	10.16	15.24	20.32	25.4	30.48	40.64	50.8	60.96	76.2	91.44	101.6	127
Q(mm/s)	2.44	4.88	7.32	9.75	14.63	19.51	24.38	29.26	39.01	48.77	58.52	73.15	87.78	97.54	121.92
Speed r/min	30	60	90	120	180	240	300	360	480	600	720	900	1080	1200	1500
Pulse pps	100	200	300	400	600	800	1000	1200	1600	2000	2400	3000	3600	4000	5000

TEST CONDITION

Testing Voltage: 24Vdc, Driver Model: DS-OLS2-FPD bipolar, chopper driver at rated current (rms).
Motor thrust may vary depending on voltage and driver conditions. 50% thrust margin is recommended.

Size 57mm DWM

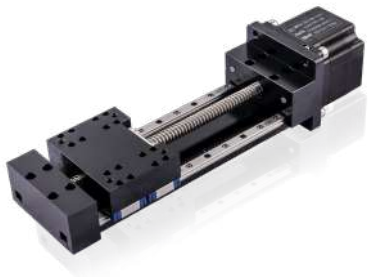

Motor Characteristics

Motor	Voltage (V)	Current (A [RMS])	Resistance (Ω)	Inductance (mH)	Lead wires	Motor length (mm)
23E2110	6.4	1.0	6.4	16.4	4	45
23E2120	3.2	2.0	1.75	4.1	4	45
23E2130	2.4	3.0	0.8	1.7	4	45
23E2210	10.8	1.0	11.5	32	4	65
23E2225	4.2	2.5	2.0	5.2	4	65
23E2240	2.8	4.0	0.7	2.0	4	65

Available Lead Screw and Travel per Step

Screw Dia. (inch)	Screw Dia. (mm)	Lead (inch)	Lead (mm)	Lead Code	Travel Per Step @1.8° (mm)*
0.375	9.525	0.025	0.635	A	0.0032
0.375	9.525	0.05	1.27	D	0.0064
0.375	9.525	0.0625	1.5875	F	0.0079
0.375	9.525	0.083	2.1167	H	0.0106
0.375	9.525	0.1	2.54	K	0.0127
0.375	9.525	0.125	3.175	L	0.0159
0.375	9.525	0.167	4.233	P	0.0212
0.375	9.525	0.2	5.08	R	0.0254
0.375	9.525	0.25	6.35	S	0.0318
0.375	9.525	0.375	9.525	V	0.0476
0.375	9.525	0.384	9.7536	W	0.0488
0.375	9.525	0.4	10.16	X	0.0508
0.375	9.525	0.5	12.7	Y	0.0635
0.375	9.525	1	25.4	Z	0.127
0.394	10	0.0787	2	G	0.01
0.394	10	0.3937	10	C	0.05
0.394	10	0.7874	20	I	0.1

For customized options, please contact DINGS' or your local distributor

Size 57mm DWM

Mechanical Specifications

Model	C100B(dyn)(kN)	Co(stat)(kN)	Mro(Nm)	Mpo(Nm)	Myo(Nm)
DWM 57	1.83	1.83	3.8	12.68	12.68

Dimensional Drawings

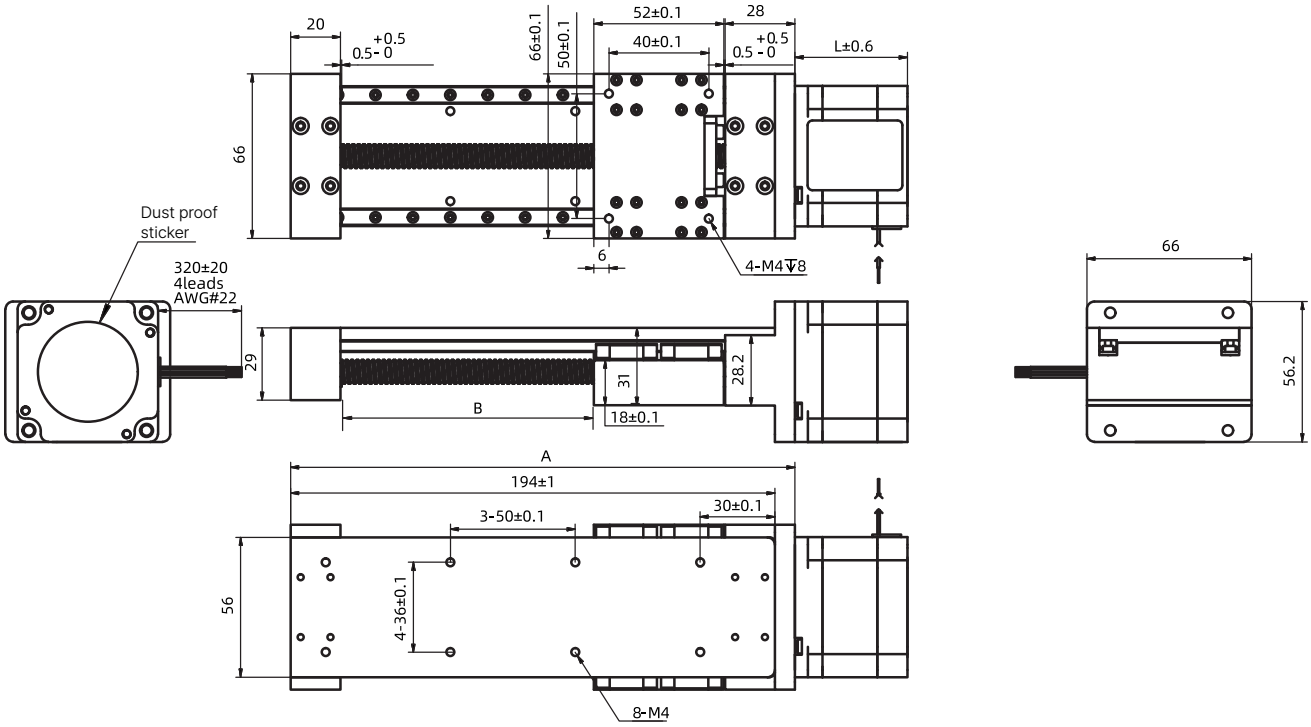

Available Stroke Selection

Size A (mm)	Stroke B (mm)	Weight (kg)	
		Single stack	Double stack
152	50	1.170	1.465
202	100	1.260	1.555
252	150	1.350	1.645
302	200	1.441	1.736
352	250	1.531	1.826
402	300	1.622	1.917
452	350	1.712	2.007
502	400	1.804	2.099
552	450	1.894	2.189
602	500	1.984	2.279
652	550	2.075	2.370
702	600	2.165	2.460

* Weight values are for reference only and may vary with actual configuration.

Size 57mm DWM

Speed Thrust Curves

Size 23 Single Stack Speed Thrust Curves

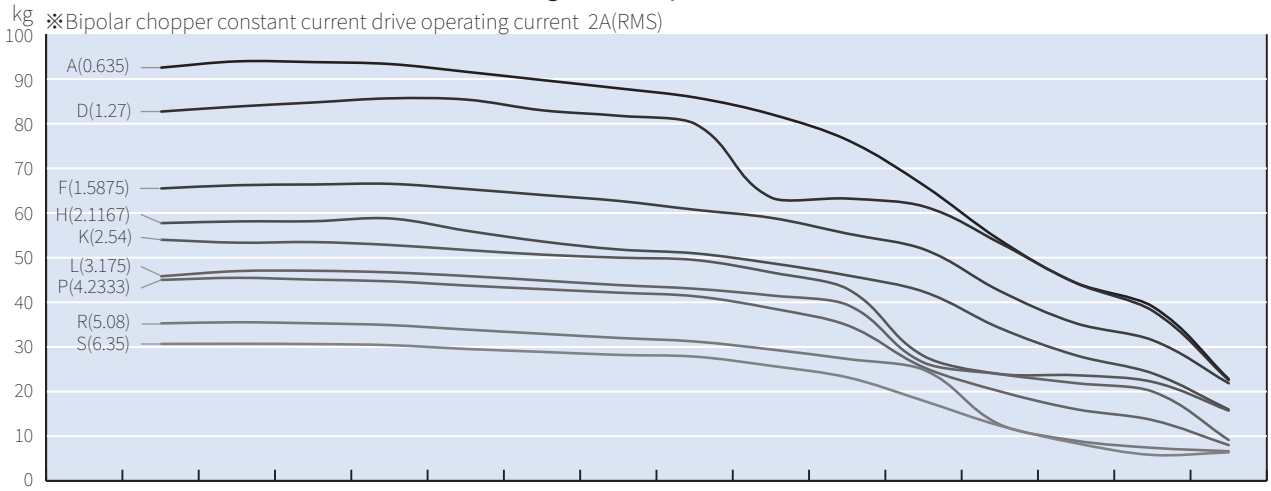

S(mm/s)	3.175	6.35	9.525	12.7	19.05	25.4	31.75	38.1	50.8	63.5	76.2	95.25	114.3	127	158.75
R(mm/s)	2.54	5.08	7.62	10.16	15.24	20.32	25.4	30.48	40.64	50.8	60.96	76.2	91.44	101.6	127
P(mm/s)	2.12	4.23	6.35	8.47	12.7	16.93	21.17	25.4	33.87	42.33	50.8	63.5	76.20	84.66	105.83
L(mm/s)	1.59	3.18	4.76	6.35	9.53	12.7	15.88	19.05	25.4	31.75	38.1	47.63	57.15	63.5	79.38
K(mm/s)	1.27	2.54	3.81	5.08	7.62	10.16	12.7	15.24	20.32	25.4	30.48	38.1	45.72	50.8	63.5
H(mm/s)	1.06	2.12	3.18	4.23	6.35	8.47	10.58	12.7	16.93	21.17	25.4	31.75	38.1	42.33	52.92
F(mm/s)	0.79	1.59	2.38	3.18	4.76	6.35	7.94	9.53	12.70	15.88	19.05	23.81	28.58	31.75	39.69
D(mm/s)	0.635	1.27	1.905	2.54	3.81	5.08	6.35	7.62	10.16	12.7	15.24	19.05	22.86	25.4	31.75
A(mm/s)	0.32	0.64	0.95	1.27	1.91	2.54	3.18	3.81	5.08	6.35	7.62	9.53	11.43	12.70	15.88
Speed r/min	30	60	90	120	180	240	300	360	480	600	720	900	1080	1200	1500
Pulse pps	100	200	300	400	600	800	1000	1200	1600	2000	2400	3000	3600	4000	5000

Size 23 Single Stack Speed Thrust Curves

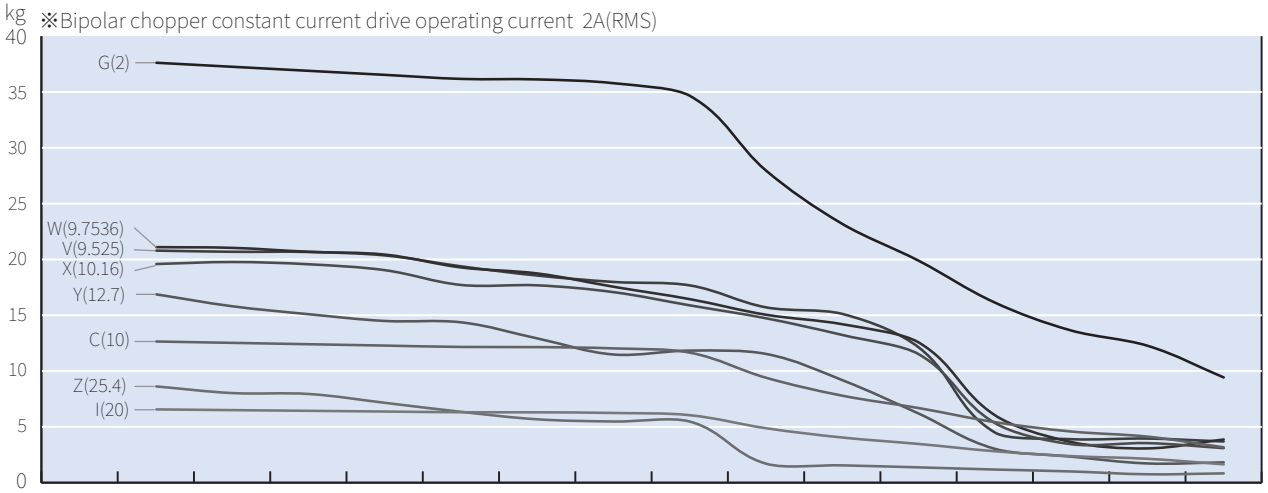

I(mm/s)	10	20	30	40	60	80	100	120	160	200	240	300	360	400	500
C(mm/s)	5	10	15	20	30	40	50	60	80	100	120	150	180	200	250
G(mm/s)	1	2	3	4	6	8	10	12	16	20	24	30	36	40	50
Z(mm/s)	12.7	25.4	38.1	50.8	76.2	101.6	127	152.4	203.2	254	304.8	381	457.2	508	635
Y(mm/s)	6.35	12.7	19.05	25.4	38.1	50.8	63.5	76.2	101.6	127	152.4	190.5	228.6	254	317.5
X(mm/s)	5.08	10.16	15.24	20.32	30.48	40.64	50.8	60.96	81.28	101.6	121.92	152.4	182.88	203.2	254
W(mm/s)	4.88	9.75	14.63	19.51	29.26	39.01	48.77	58.52	78.03	97.54	117.04	146.3	175.56	195.07	243.84
V(mm/s)	4.76	9.53	14.29	19.05	28.58	38.1	47.63	57.15	76.2	95.25	114.3	142.88	171.45	190.50	238.13
Speed r/min	30	60	90	120	180	240	300	360	480	600	720	900	1080	1200	1500
Pulse pps	100	200	300	400	600	800	1000	1200	1600	2000	2400	3000	3600	4000	5000

TEST CONDITION

Testing Voltage: 48Vdc, Driver Model: DS-OLS4-FPD bipolar, chopper driver at rated current (rms).
Motor thrust may vary depending on voltage and driver conditions. 50% thrust margin is recommended.

Size 57mm DWM

Size 23 Double Stack Speed Thrust Curves

※Bipolar chopper constant current drive operating current 2A(RMS)

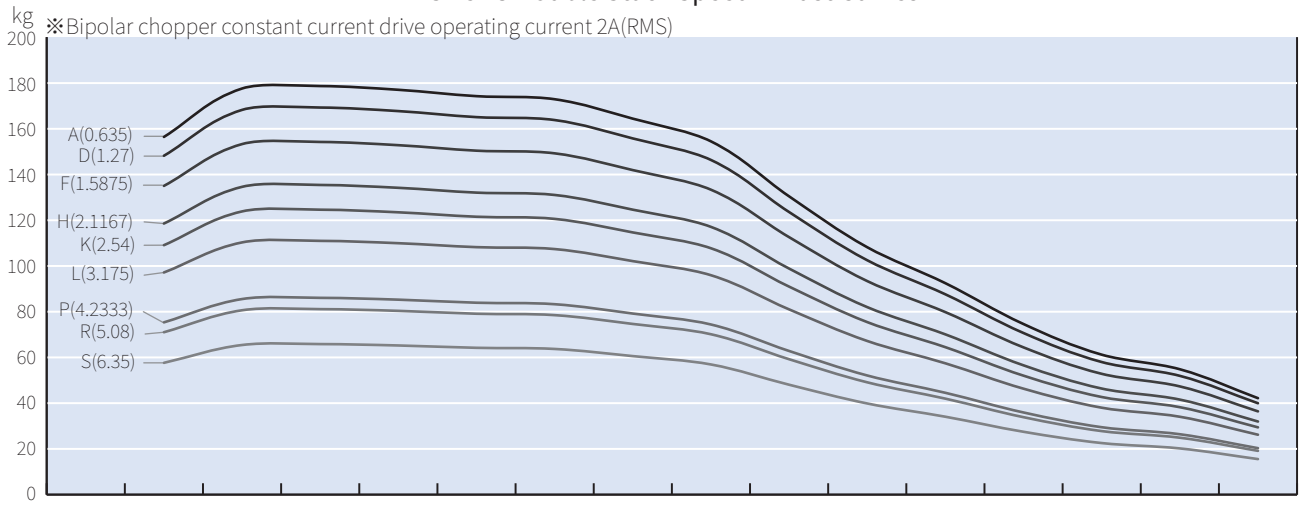

S(mm/s)	3.175	6.35	9.525	12.7	19.05	25.4	31.75	38.1	50.8	63.5	76.2	95.25	114.3	127	158.75
R(mm/s)	2.54	5.08	7.62	10.16	15.24	20.32	25.4	30.48	40.64	50.8	60.96	76.2	91.44	101.6	127
P(mm/s)	2.12	4.23	6.35	8.47	12.7	16.93	21.17	25.4	33.87	42.33	50.8	63.5	76.20	84.66	105.83
L(mm/s)	1.59	3.18	4.76	6.35	9.53	12.7	15.88	19.05	25.4	31.75	38.1	47.63	57.15	63.5	79.38
K(mm/s)	1.27	2.54	3.81	5.08	7.62	10.16	12.7	15.24	20.32	25.4	30.48	38.1	45.72	50.8	63.5
H(mm/s)	1.06	2.12	3.18	4.23	6.35	8.47	10.58	12.7	16.93	21.17	25.4	31.75	38.1	42.33	52.92
F(mm/s)	0.79	1.59	2.38	3.18	4.76	6.35	7.94	9.53	12.70	15.88	19.05	23.81	28.58	31.75	39.69
D(mm/s)	0.635	1.27	1.905	2.54	3.81	5.08	6.35	7.62	10.16	12.7	15.24	19.05	22.86	25.4	31.75
A(mm/s)	0.32	0.64	0.95	1.27	1.91	2.54	3.18	3.81	5.08	6.35	7.62	9.53	11.43	12.70	15.88
Speed r/min	30	60	90	120	180	240	300	360	480	600	720	900	1080	1200	1500
Pulse pps	100	200	300	400	600	800	1000	1200	1600	2000	2400	3000	3600	4000	5000

Size 23 Double Stack Speed Thrust Curves

※Bipolar chopper constant current drive operating current 2A(RMS)

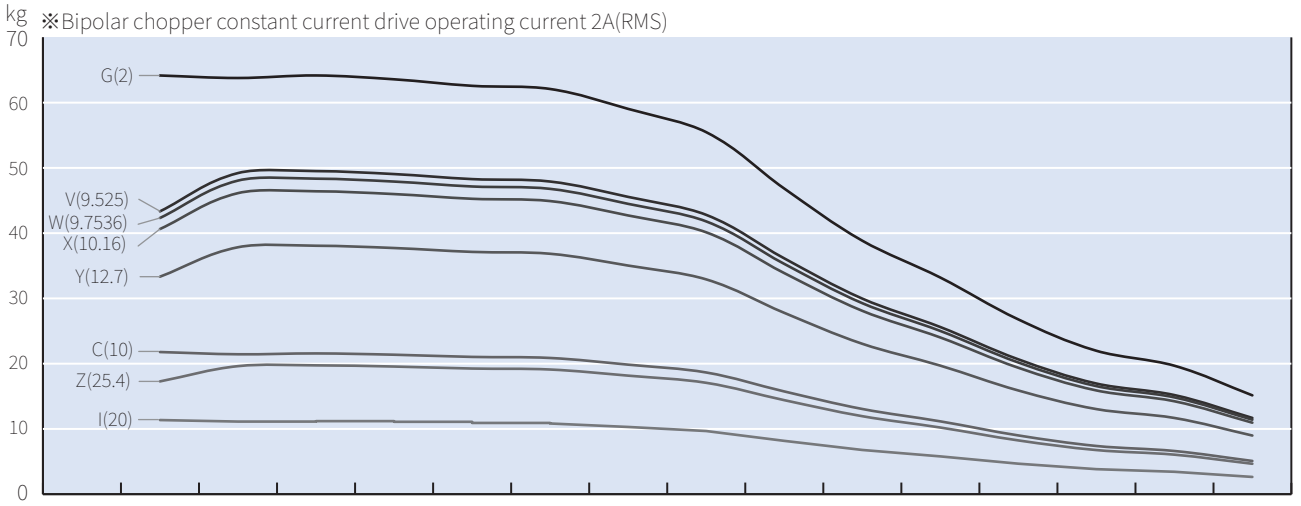

I(mm/s)	10	20	30	40	60	80	100	120	160	200	240	300	360	400	500
C(mm/s)	5	10	15	20	30	40	50	60	80	100	120	150	180	200	250
G(mm/s)	1	2	3	4	6	8	10	12	16	20	24	30	36	40	50
Z(mm/s)	12.7	25.4	38.1	50.8	76.2	101.6	127	152.4	203.2	254	304.8	381	457.2	508	635
Y(mm/s)	6.35	12.7	19.05	25.4	38.1	50.8	63.5	76.2	101.6	127	152.4	190.5	228.6	254	317.5
X(mm/s)	5.08	10.16	15.24	20.32	30.48	40.64	50.8	60.96	81.28	101.6	121.92	152.4	182.88	203.2	254
W(mm/s)	4.88	9.75	14.63	19.51	29.26	39.01	48.77	58.52	78.03	97.54	117.04	146.3	175.56	195.07	243.84
V(mm/s)	4.76	9.53	14.29	19.05	28.58	38.1	47.63	57.15	76.2	95.25	114.3	142.88	171.45	190.50	238.13
Speed r/min	30	60	90	120	180	240	300	360	480	600	720	900	1080	1200	1500
Pulse pps	100	200	300	400	600	800	1000	1200	1600	2000	2400	3000	3600	4000	5000

TEST CONDITION

Testing Voltage: 48Vdc, Driver Model: DS-OLS4-FPD bipolar, chopper driver at rated current (rms).
Motor thrust may vary depending on voltage and driver conditions. 50% thrust margin is recommended.

DMP Series

The DMP series delivers compact, high-rigidity, high-precision linear motion, built on DINGS' high-precision ball screw linear module platform and self-developed compact structure.

Available in 6 models (DMP15, DMP20, DMP30, DMP50, DMP75, DMP100), the series integrates stepper motors directly with C5-grade ball screws (Φ6mm and Φ8mm), enabling integrated solutions for precision automation applications — including optical stages, semiconductor equipment, and precision positioning systems — that require high accuracy, high load capacity, and smooth linear motion.

DMP 15	I-72
DMP 20	I-74
DMP 30	I-76
DMP 50	I-78
DMP 75	I-80
DMP 100	I-82

DMP 15

Motor Characteristics

Motor part number	DMP15-11E2110BS14-4040-110	
Phase	-	2
Step angle	°	1.8
Rated current/phase	A(RMS)	1
Resistance/phase	Ω	2.1±10%
Inductance/phase	mH	1.5±20%
Linear travel per step	mm/step	0.005
Ball screw diameter	mm	Φ6
Ball screw lead	mm	1
Grade	-	C5(DY)
Insulation class	-	B
Insulation resistance	MΩ	100(500VDC)
Heat rise	°C	80
Stroke	mm	15
Axial clearance of ballscrew	mm	0.005
Operating Temp	°C	0-40, No condensation

Dimensional Drawings

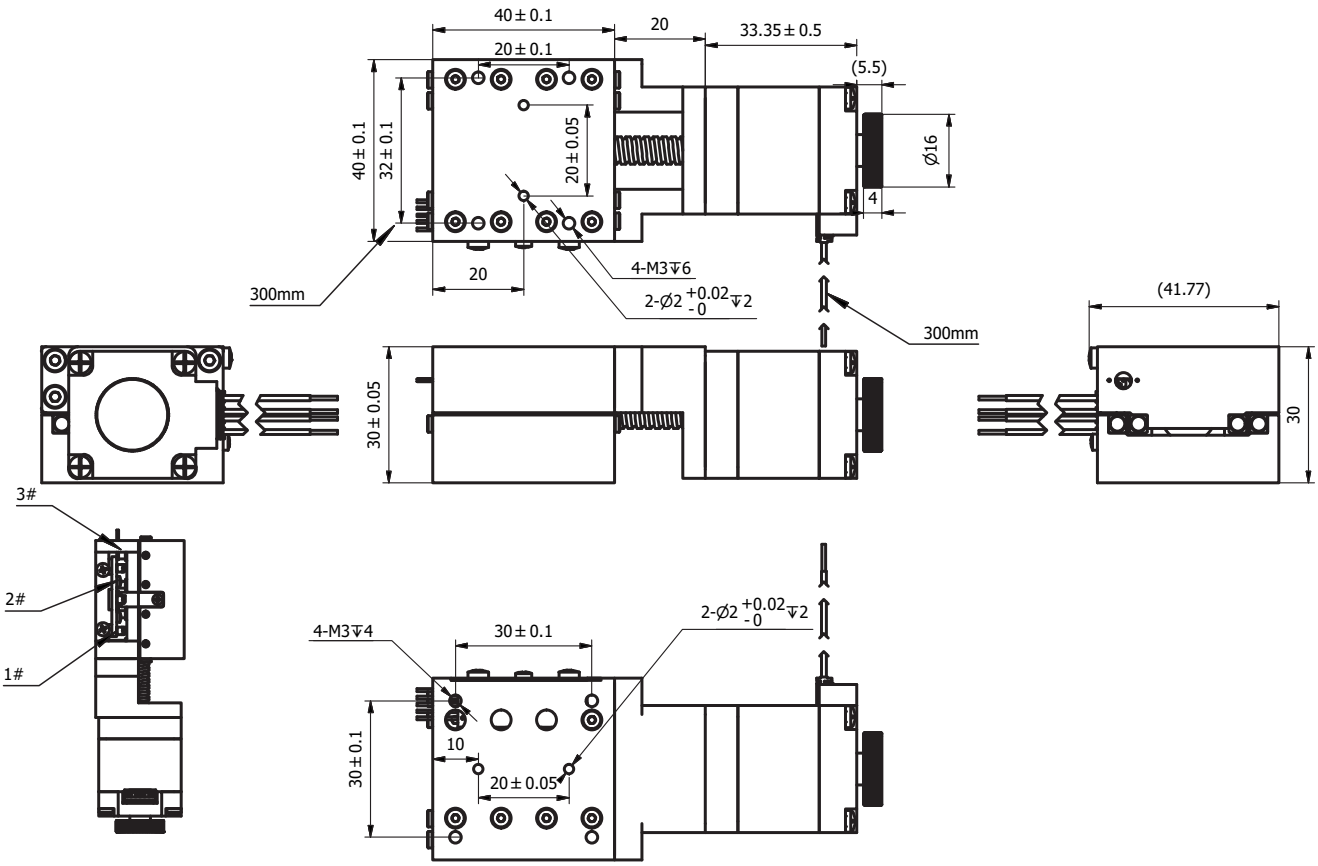

For customized options, please contact DINGS' or your local distributor

Speed Thrust Curves

Size 11 Single Stack Speed Thrust Curves

N ※ Bipolar chopper constant current drive, operating current 1.0A (RMS) (Recommended Load Limit 115N)

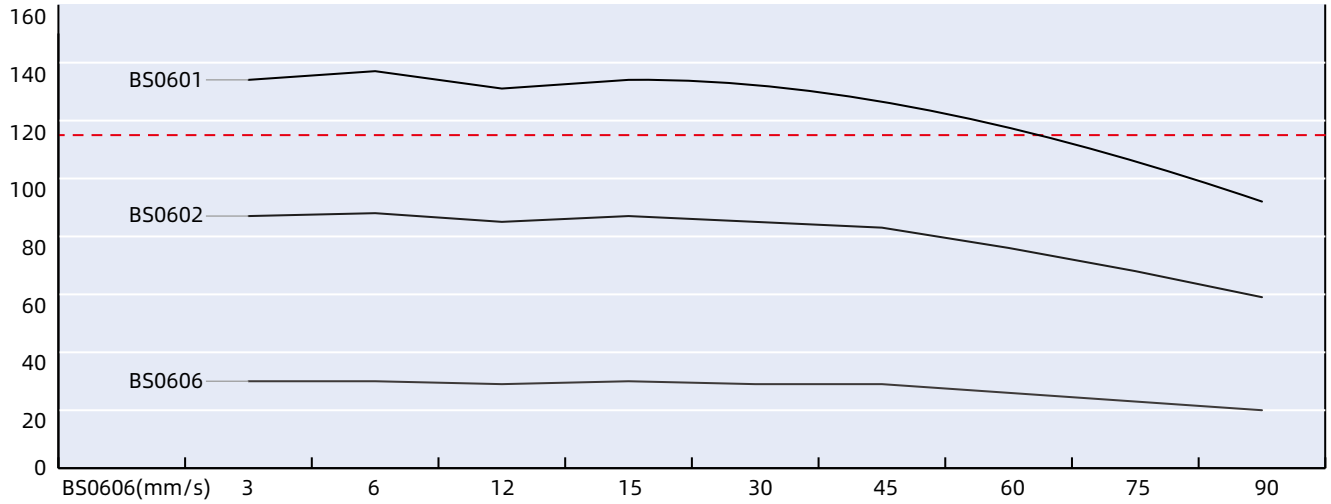

BS0606(mm/s)	3	6	12	15	30	45	60	75	90
BS0602(mm/s)	1	2	4	5	10	15	20	25	30
BS0601(mm/s)	0.5	1	2	2.5	5.0	7.5	10	12.5	15
Speed r/min	30	60	120	150	300	450	600	750	900
Pulse pps	100	200	400	500	1000	1500	2000	2500	3000

Size 11 Double Stack Speed Thrust Curves

N ※ Bipolar chopper constant current drive, operating current 0.95A (RMS) (Recommended Load Limit 140N)

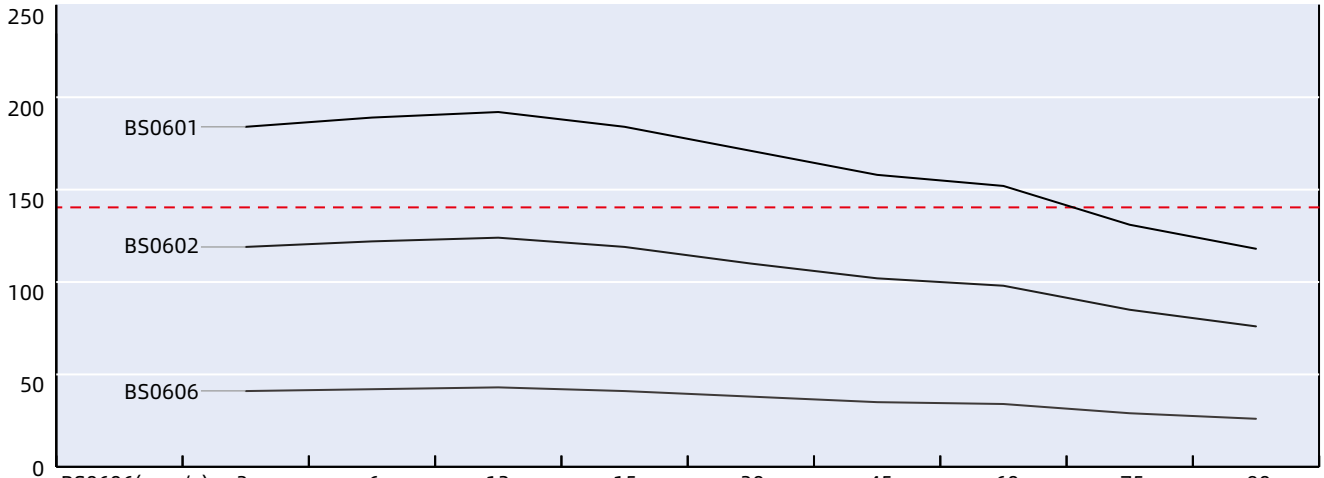

BS0606(mm/s)	3	6	12	15	30	45	60	75	90
BS0602(mm/s)	1	2	4	5	10	15	20	25	30
BS0601(mm/s)	0.5	1	2	2.5	5	7.5	10	12.5	15
Speed r/min	30	60	120	150	300	450	600	750	900
Pulse pps	100	200	400	500	1000	1500	2000	2500	3000

TEST CONDITION

Testing Voltage: 24Vdc, Driver Model: DS-OLS2-FPD bipolar, chopper driver at rated current (rms).
Motor thrust may vary depending on voltage and driver conditions. 50% thrust margin is recommended.

DMP 20

Motor Characteristics

Motor part number	DMP20-11E2110BS14-6060-110	
Phase	-	2
Step angle	°	1.8
Rated current/phase	A(RMS)	1
Resistance/phase	Ω	2.1±10%
Inductance/phase	mH	1.5±20%
Linear travel per step	mm/step	0.005
Ball screw diameter	mm	Φ6
Ball screw lead	mm	1
Grade	-	C5(DY)
Insulation class	-	B
Insulation resistance	MΩ	100(500VDC)
Heat rise	°C	80
Stroke	mm	20
Axial clearance of ballscrew	mm	0.005
Operating Temp	°C	0-40, No condensation

Dimensional Drawings

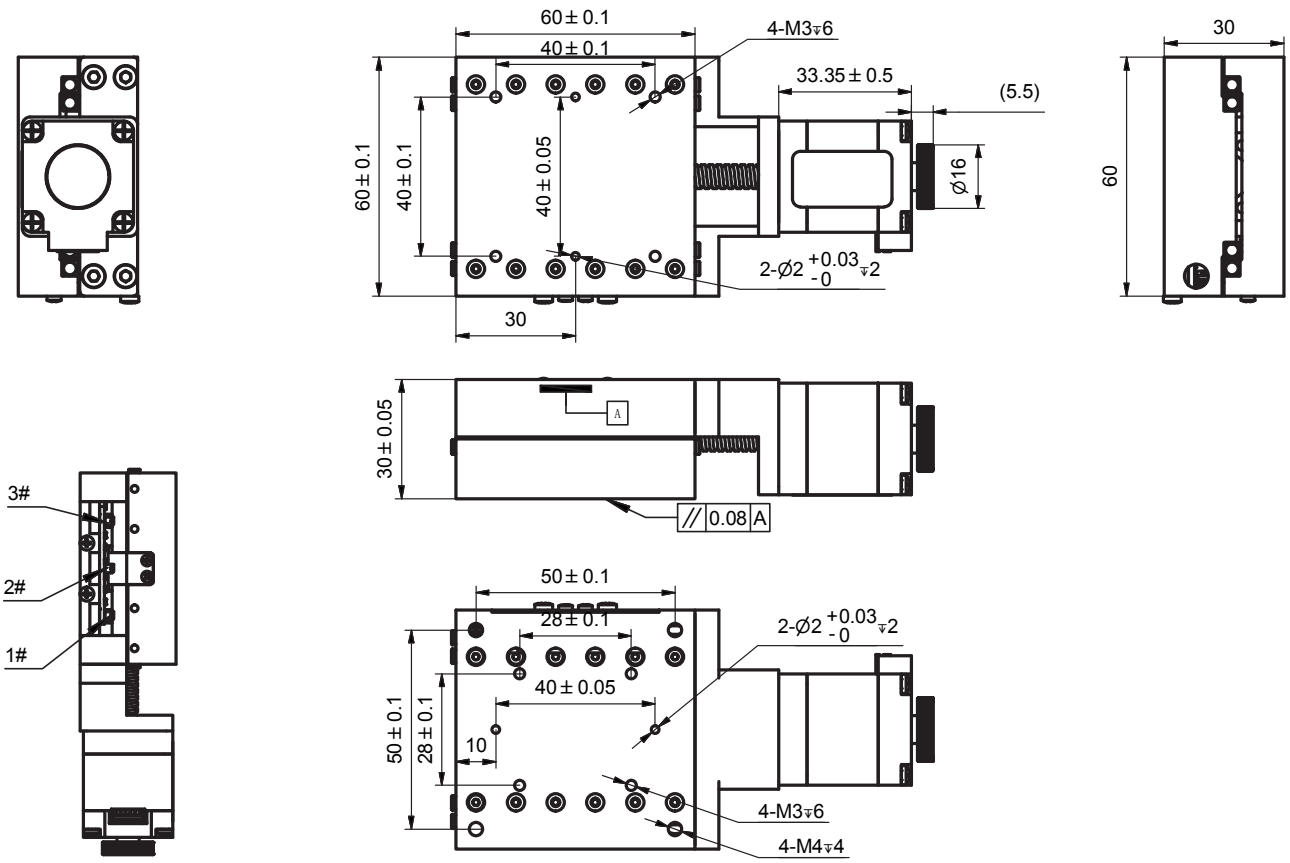

For customized options, please contact DINGS' or your local distributor

Speed Thrust Curves

Size 11 Single Stack Speed Thrust Curves

N ※ Bipolar chopper constant current drive, operating current 1.0A (RMS) (Recommended Load Limit 115N)

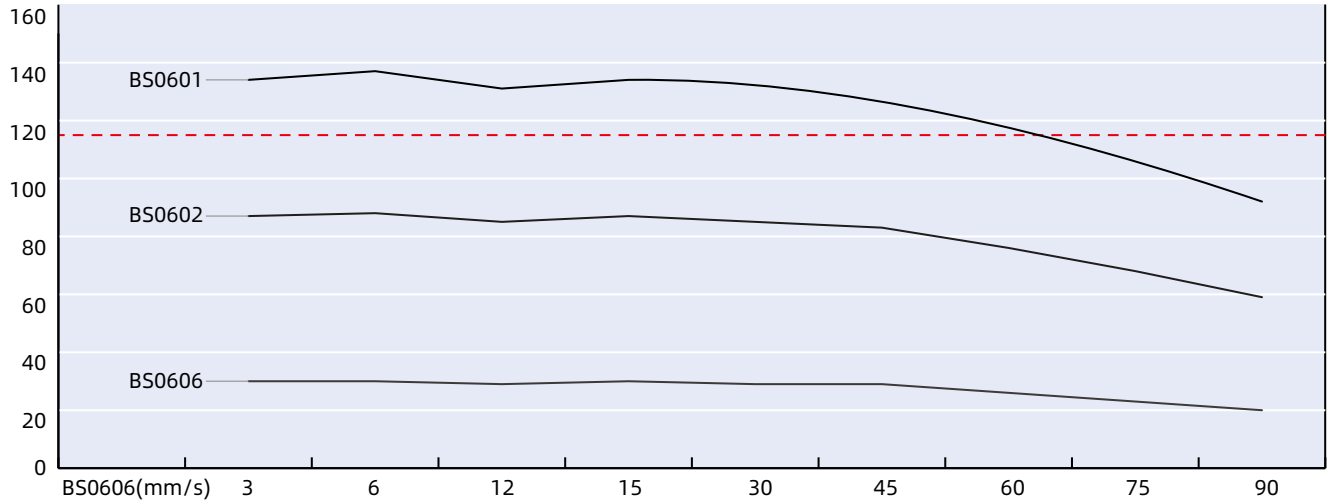

BS0606(mm/s)	3	6	12	15	30	45	60	75	90
BS0602(mm/s)	1	2	4	5	10	15	20	25	30
BS0601(mm/s)	0.5	1	2	2.5	5.0	7.5	10	12.5	15
Speed r/min	30	60	120	150	300	450	600	750	900
Pulse pps	100	200	400	500	1000	1500	2000	2500	3000

Size 11 Double Stack Speed Thrust Curves

N ※ Bipolar chopper constant current drive, operating current 0.95A (RMS) (Recommended Load Limit 140N)

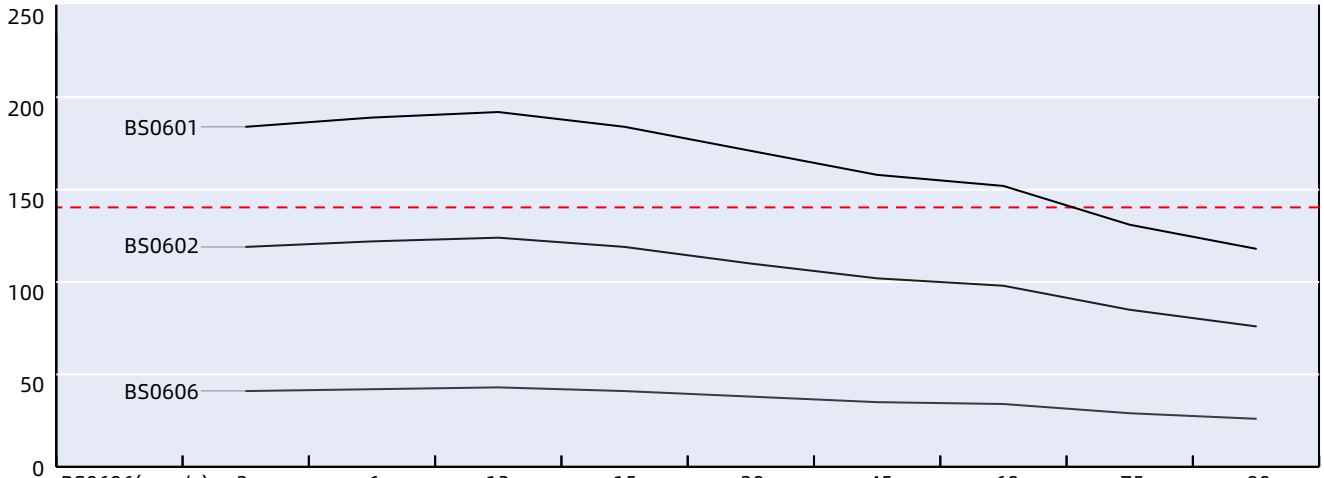

BS0606(mm/s)	3	6	12	15	30	45	60	75	90
BS0602(mm/s)	1	2	4	5	10	15	20	25	30
BS0601(mm/s)	0.5	1	2	2.5	5	7.5	10	12.5	15
Speed r/min	30	60	120	150	300	450	600	750	900
Pulse pps	100	200	400	500	1000	1500	2000	2500	3000

TEST CONDITION

Testing Voltage: 24Vdc, Driver Model: DS-OLS2-FPD bipolar, chopper driver at rated current (rms).
Motor thrust may vary depending on voltage and driver conditions. 50% thrust margin is recommended.

DMP 30

Motor Characteristics

Motor part number	DMP30-17E2115BS24-8080-110	
Phase	-	2
Step angle	°	1.8
Rated current/phase	A(RMS)	1.5
Resistance/phase	Ω	1.9±10%
Inductance/phase	mH	2.2±20%
Linear travel per step	mm/step	0.01
Ball screw diameter	mm	Φ8
Ball screw lead	mm	2
Grade	-	C5(DY)
Insulation class	-	B
Insulation resistance	MΩ	100(500VDC)
Heat rise	°C	80
Stroke	mm	30
Axial clearance of ballscrew	mm	0.005
Operating Temp	°C	0-40, No condensation

Dimensional Drawings

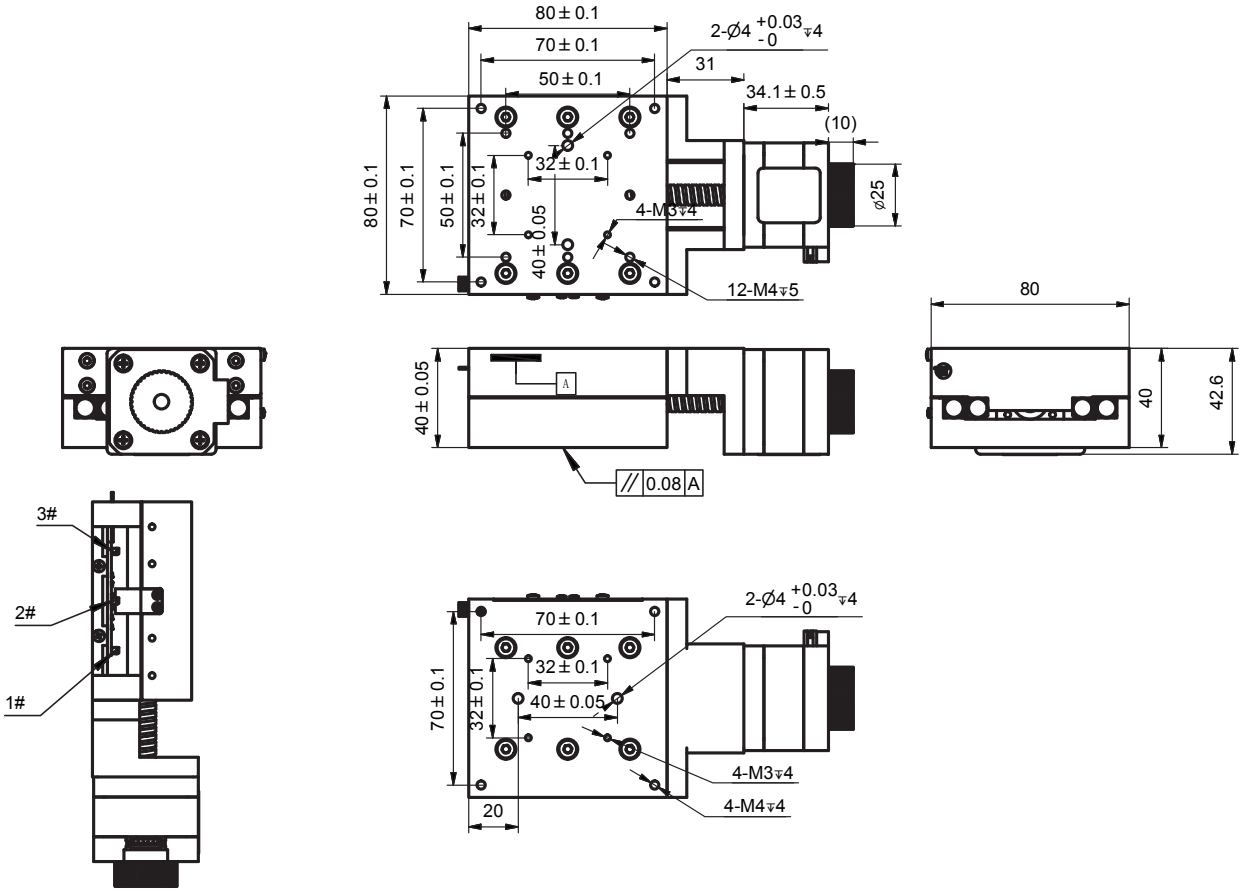

For customized options, please contact DINGS' or your local distributor

Speed Thrust Curves

Size 17 Single Stack Speed Thrust Curves

N ※ Bipolar chopper constant current drive, operating current 1.5A (RMS) (Recommended Load Limit 230N)

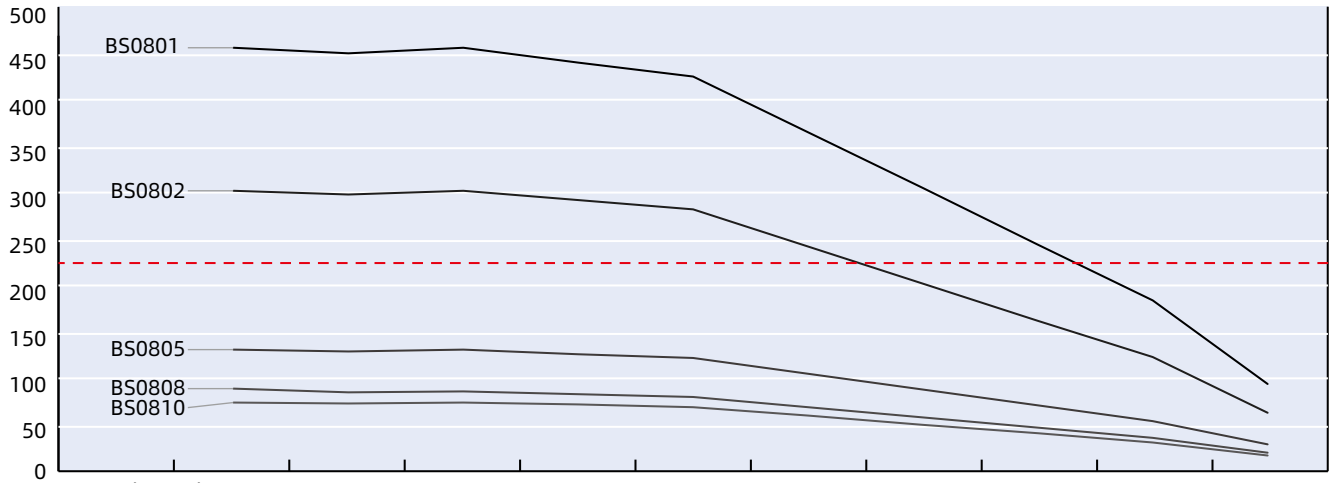

BS0810(mm/s)	5	10	20	25	50	75	100	125	150	175
BS0808(mm/s)	4	8	16	20	40	60	80	100	120	140
BS0805(mm/s)	2.5	5	10	12.5	25	37.5	50	62.5	75	87.5
BS0802(mm/s)	1	2	4	5	10	15	20	25	30	35
BS0801(mm/s)	0.5	1	2	2.5	5	7.5	10	12.5	15	17.5
Speed r/min	30	60	120	150	300	450	600	750	900	1050
Pulse pps	100	200	400	500	1000	1500	2000	2500	3000	3500

Size 17 Double Stack Speed Thrust Curves

N ※ Bipolar chopper constant current drive, operating current 2.5A (RMS) (Recommended Load Limit 230N)

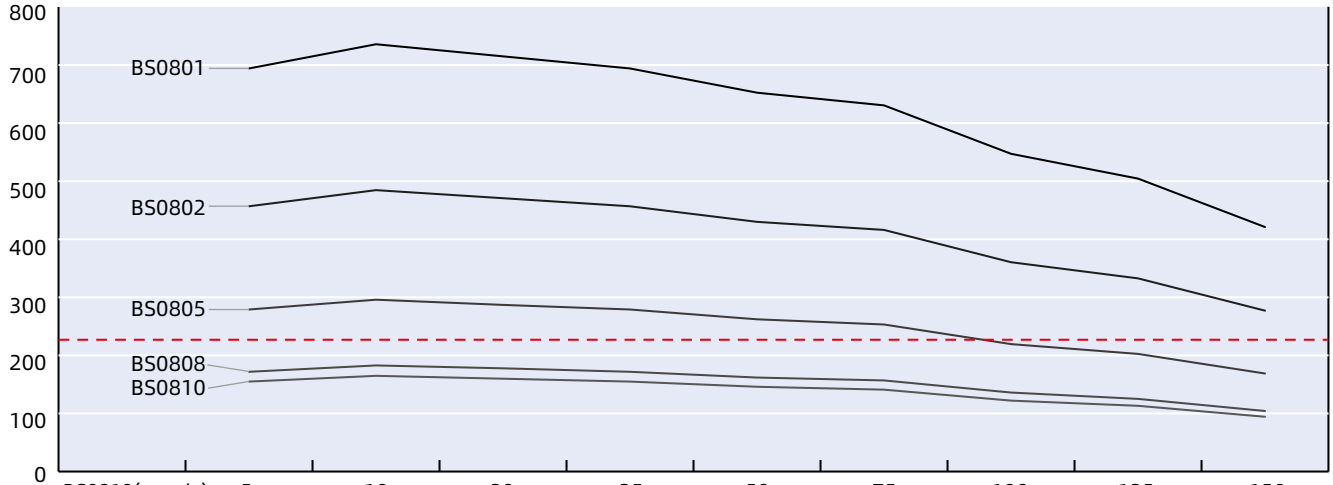

BS0810(mm/s)	5	10	20	25	50	75	100	125	150
BS0808(mm/s)	4	8	16	20	40	60	80	100	120
BS0805(mm/s)	2.5	5	10	12.5	25	37.5	50	62.5	75
BS0802(mm/s)	1	2	4	5	10	15	20	25	30
BS0801(mm/s)	0.5	1	2	2.5	5	7.5	10	12.5	15
Speed r/min	30	60	120	150	300	450	600	750	900
Pulse pps	100	200	400	500	1000	1500	2000	2500	3000

TEST CONDITION

Testing Voltage: 24Vdc, Driver Model: DS-OLS2-FPD bipolar, chopper driver at rated current (rms).
Motor thrust may vary depending on voltage and driver conditions. 50% thrust margin is recommended.

DMP 50

Motor Characteristics

Motor part number	DMP50-17E2115BS24-80100-110	
Phase	-	2
Step angle	°	1.8
Rated current/phase	A(RMS)	1.5
Resistance/phase	Ω	1.9±10%
Inductance/phase	mH	2.2±20%
Linear travel per step	mm/step	0.01
Ball screw diameter	mm	Φ8
Ball screw lead	mm	2
Grade	-	C5(DY)
Insulation class	-	B
Insulation resistance	MΩ	100(500VDC)
Heat rise	°C	80
Stroke	mm	50
Axial clearance of ballscrew	mm	0.005
Operating Temp	°C	0-40, No condensation

Dimensional Drawings

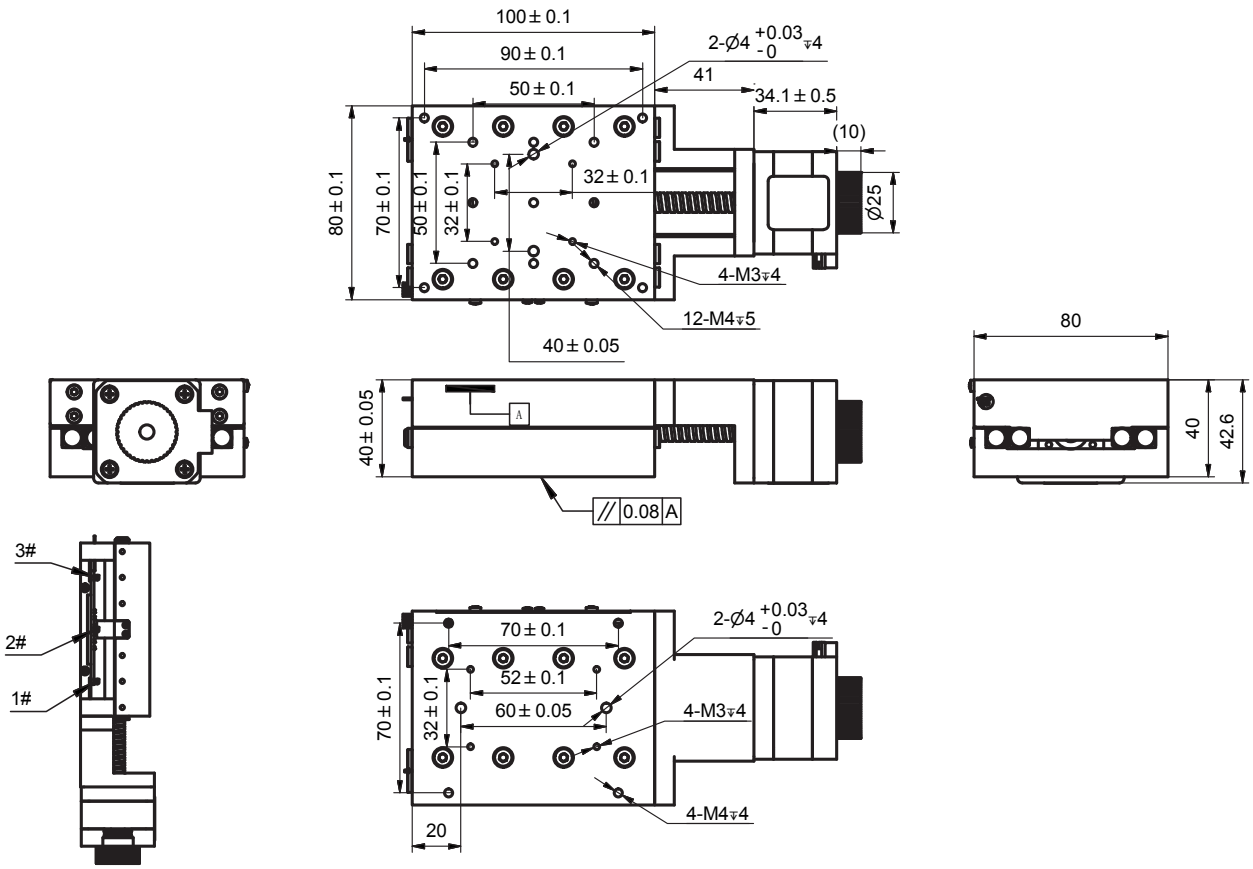

For customized options, please contact DINGS' or your local distributor

Speed Thrust Curves

Size 17 Single Stack Speed Thrust Curves

N ※ Bipolar chopper constant current drive, operating current 1.5A (RMS) (Recommended Load Limit 230N)

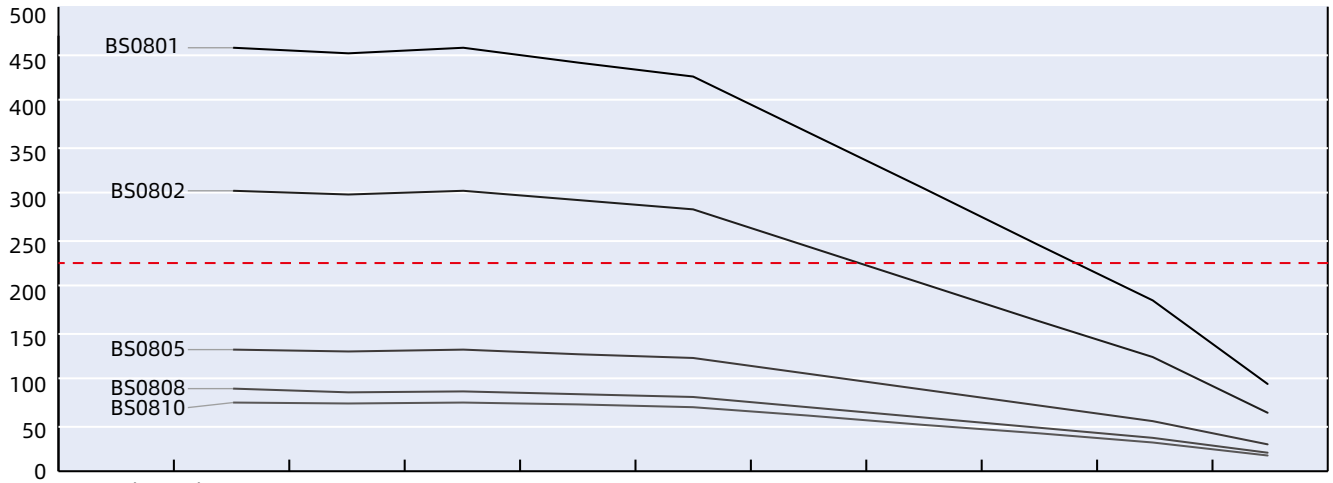

BS0810(mm/s)	5	10	20	25	50	75	100	125	150	175
BS0808(mm/s)	4	8	16	20	40	60	80	100	120	140
BS0805(mm/s)	2.5	5	10	12.5	25	37.5	50	62.5	75	87.5
BS0802(mm/s)	1	2	4	5	10	15	20	25	30	35
BS0801(mm/s)	0.5	1	2	2.5	5	7.5	10	12.5	15	17.5
Speed r/min	30	60	120	150	300	450	600	750	900	1050
Pulse pps	100	200	400	500	1000	1500	2000	2500	3000	3500

Size 17 Double Stack Speed Thrust Curves

N ※ Bipolar chopper constant current drive, operating current 2.5A (RMS) (Recommended Load Limit 230N)

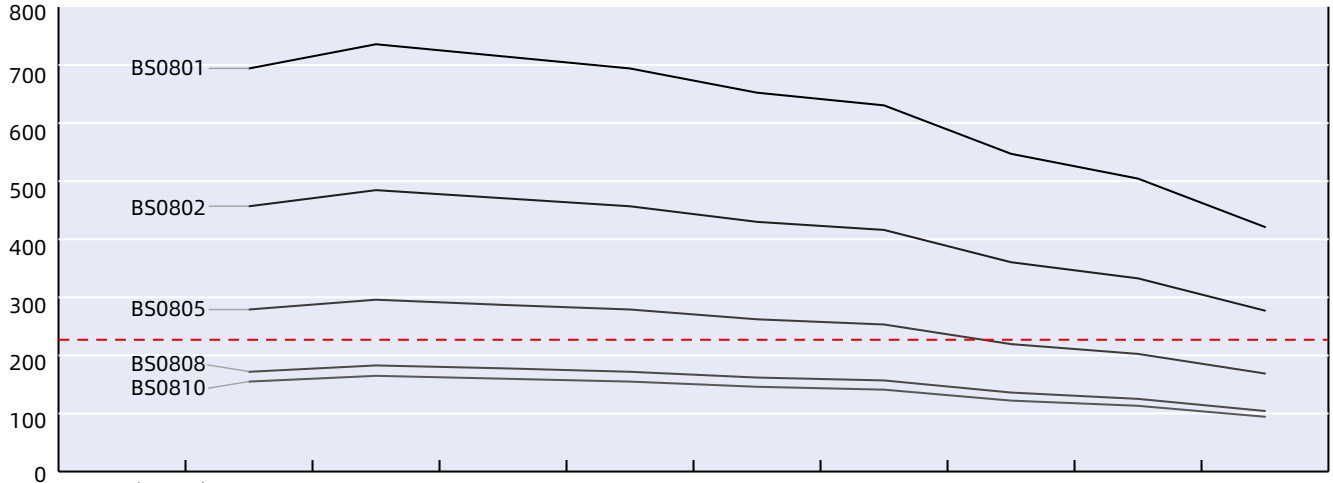

BS0810(mm/s)	5	10	20	25	50	75	100	125	150
BS0808(mm/s)	4	8	16	20	40	60	80	100	120
BS0805(mm/s)	2.5	5	10	12.5	25	37.5	50	62.5	75
BS0802(mm/s)	1	2	4	5	10	15	20	25	30
BS0801(mm/s)	0.5	1	2	2.5	5	7.5	10	12.5	15
Speed r/min	30	60	120	150	300	450	600	750	900
Pulse pps	100	200	400	500	1000	1500	2000	2500	3000

TEST CONDITION

Testing Voltage: 24Vdc, Driver Model: DS-OLS2-FPD bipolar, chopper driver at rated current (rms).
Motor thrust may vary depending on voltage and driver conditions. 50% thrust margin is recommended.

DMP 75

Motor Characteristics

Motor part number	DMP75-17E2115BS24-80125-110	
Phase	-	2
Step angle	°	1.8
Rated current/phase	A(RMS)	1.5
Resistance/phase	Ω	1.9±10%
Inductance/phase	mH	2.2±20%
Linear travel per step	mm/step	0.01
Ball screw diameter	mm	Φ8
Ball screw lead	mm	2
Grade	-	C5(DY)
Insulation class	-	B
Insulation resistance	MΩ	100(500VDC)
Heat rise	°C	80
Stroke	mm	75
Axial clearance of ballscrew	mm	0.005
Operating Temp	°C	0-40, No condensation

Dimensional Drawings

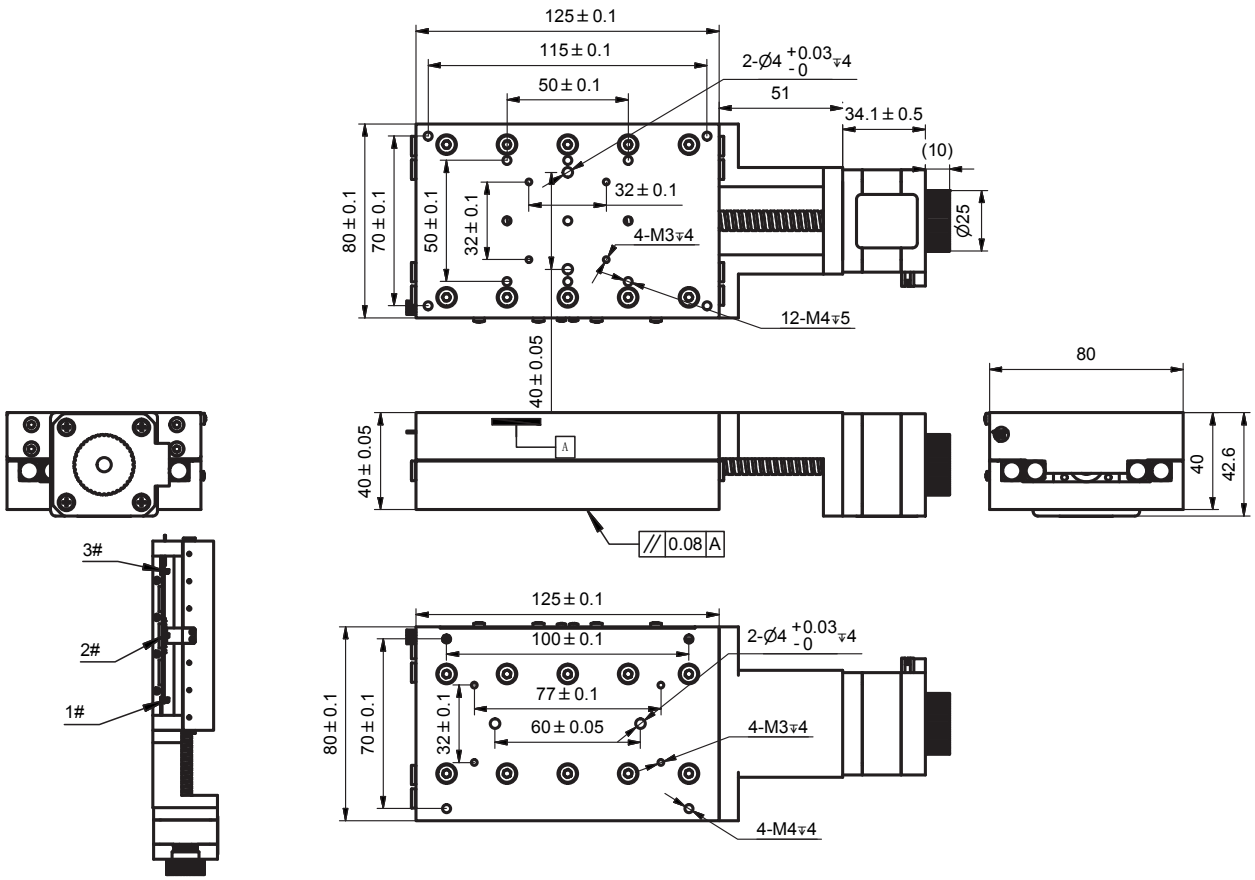

For customized options, please contact DINGS' or your local distributor

Speed Thrust Curves

Size 17 Single Stack Speed Thrust Curves

N ※ Bipolar chopper constant current drive, operating current 1.5A (RMS) (Recommended Load Limit 230N)

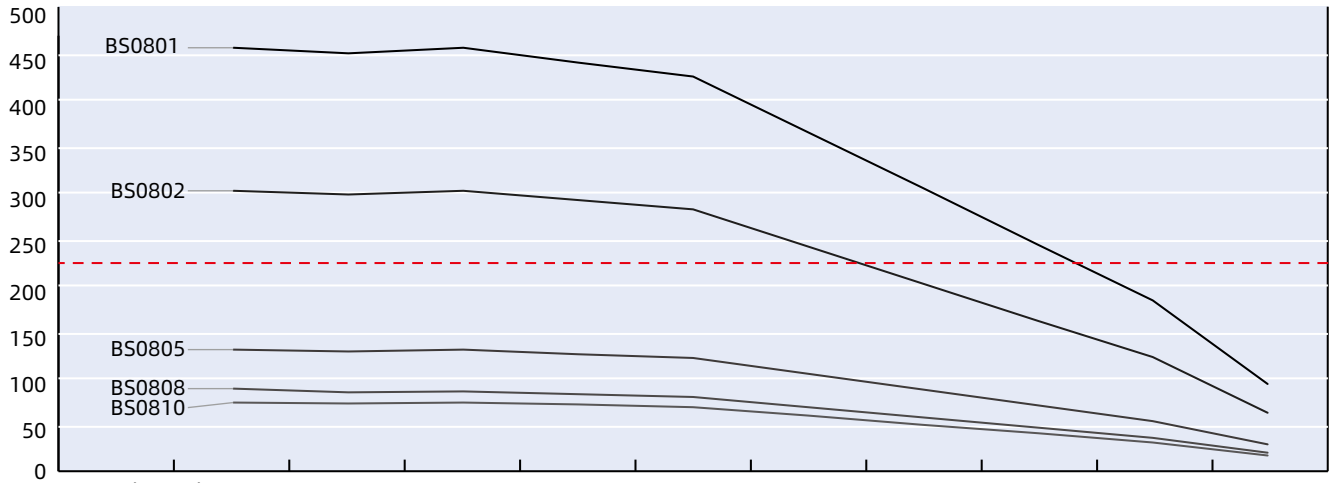

BS0810(mm/s)	5	10	20	25	50	75	100	125	150	175
BS0808(mm/s)	4	8	16	20	40	60	80	100	120	140
BS0805(mm/s)	2.5	5	10	12.5	25	37.5	50	62.5	75	87.5
BS0802(mm/s)	1	2	4	5	10	15	20	25	30	35
BS0801(mm/s)	0.5	1	2	2.5	5	7.5	10	12.5	15	17.5
Speed r/min	30	60	120	150	300	450	600	750	900	1050
Pulse pps	100	200	400	500	1000	1500	2000	2500	3000	3500

Size 17 Double Stack Speed Thrust Curves

N ※ Bipolar chopper constant current drive, operating current 2.5A (RMS) (Recommended Load Limit 230N)

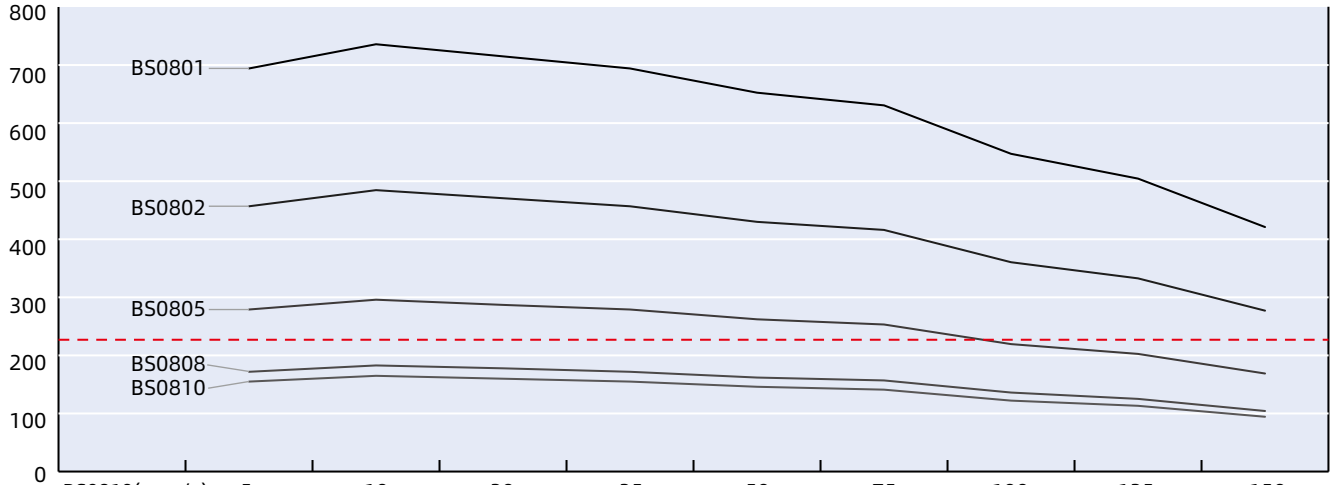

BS0810(mm/s)	5	10	20	25	50	75	100	125	150
BS0808(mm/s)	4	8	16	20	40	60	80	100	120
BS0805(mm/s)	2.5	5	10	12.5	25	37.5	50	62.5	75
BS0802(mm/s)	1	2	4	5	10	15	20	25	30
BS0801(mm/s)	0.5	1	2	2.5	5	7.5	10	12.5	15
Speed r/min	30	60	120	150	300	450	600	750	900
Pulse pps	100	200	400	500	1000	1500	2000	2500	3000

TEST CONDITION

Testing Voltage: 24Vdc, Driver Model: DS-OLS2-FPD bipolar, chopper driver at rated current (rms).
Motor thrust may vary depending on voltage and driver conditions. 50% thrust margin is recommended.

DMP 100

Motor Characteristics

Motor part number	DMP100-17E2115BS24-80175-110	
Phase	-	2
Step angle	°	1.8
Rated current/phase	A(RMS)	1.5
Resistance/phase	Ω	1.9±10%
Inductance/phase	mH	2.2±20%
Linear travel per step	mm/step	0.01
Ball screw diameter	mm	Φ8
Ball screw lead	mm	2
Grade	-	C5(DY)
Insulation class	-	B
Insulation resistance	MΩ	100(500VDC)
Heat rise	°C	80
Stroke	mm	100
Axial clearance of ballscrew	mm	0.005
Operating Temp	°C	0-40, No condensation

Dimensional Drawings

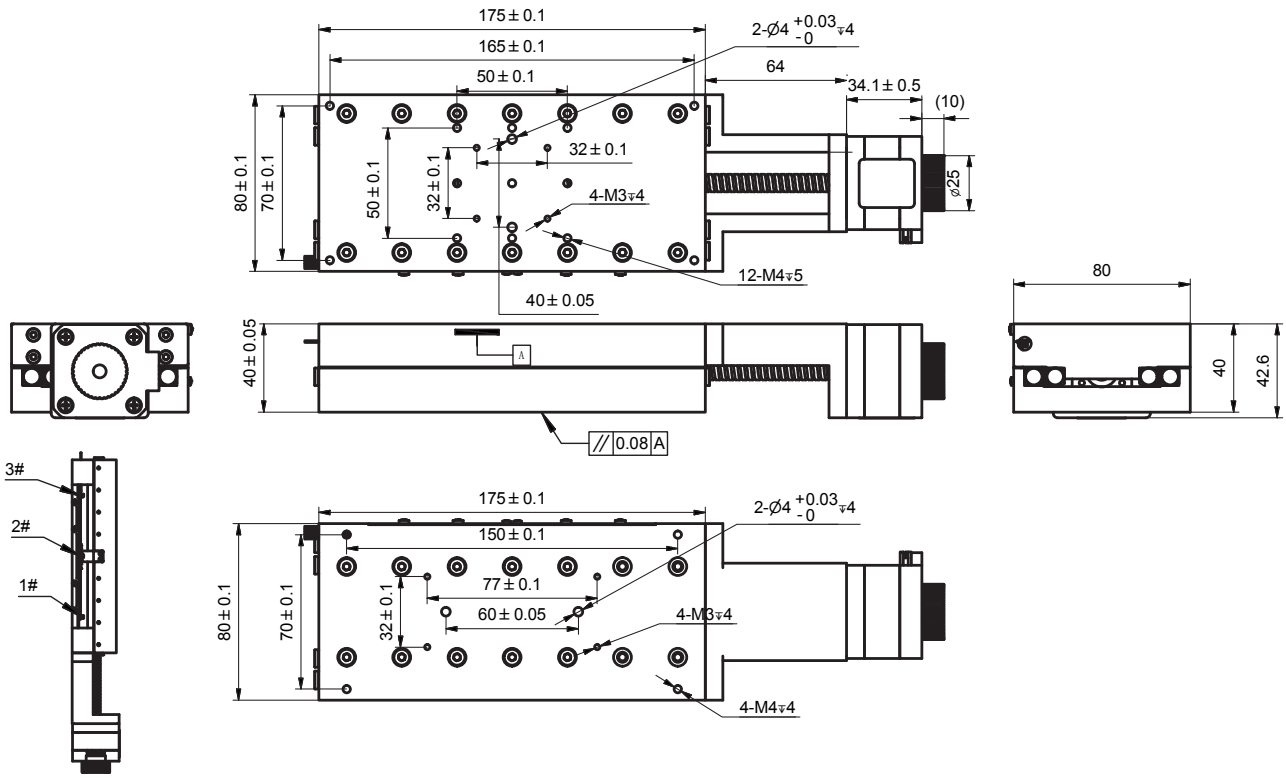

For customized options, please contact DINGS' or your local distributor

Speed Thrust Curves

Size 17 Single Stack Speed Thrust Curves

N ※ Bipolar chopper constant current drive, operating current 1.5A (RMS) (Recommended Load Limit 230N)

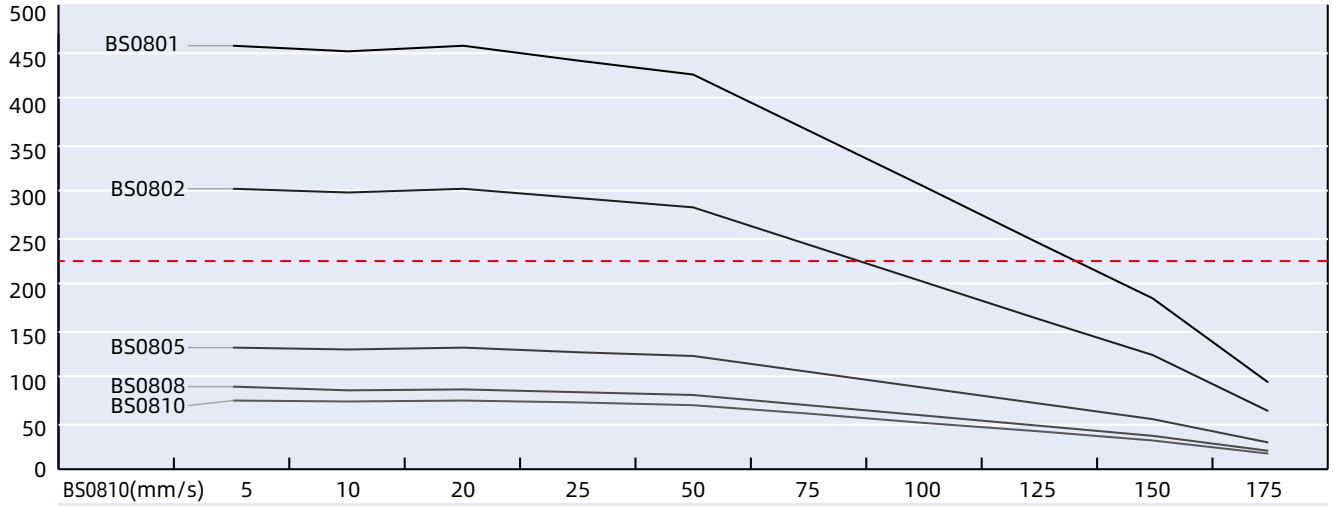

BS0810(mm/s)	5	10	20	25	50	75	100	125	150	175
BS0808(mm/s)	4	8	16	20	40	60	80	100	120	140
BS0805(mm/s)	2.5	5	10	12.5	25	37.5	50	62.5	75	87.5
BS0802(mm/s)	1	2	4	5	10	15	20	25	30	35
BS0801(mm/s)	0.5	1	2	2.5	5	7.5	10	12.5	15	17.5
Speed r/min	30	60	120	150	300	450	600	750	900	1050
Pulse pps	100	200	400	500	1000	1500	2000	2500	3000	3500

Size 17 Double Stack Speed Thrust Curves

N ※ Bipolar chopper constant current drive, operating current 2.5A (RMS) (Recommended Load Limit 230N)

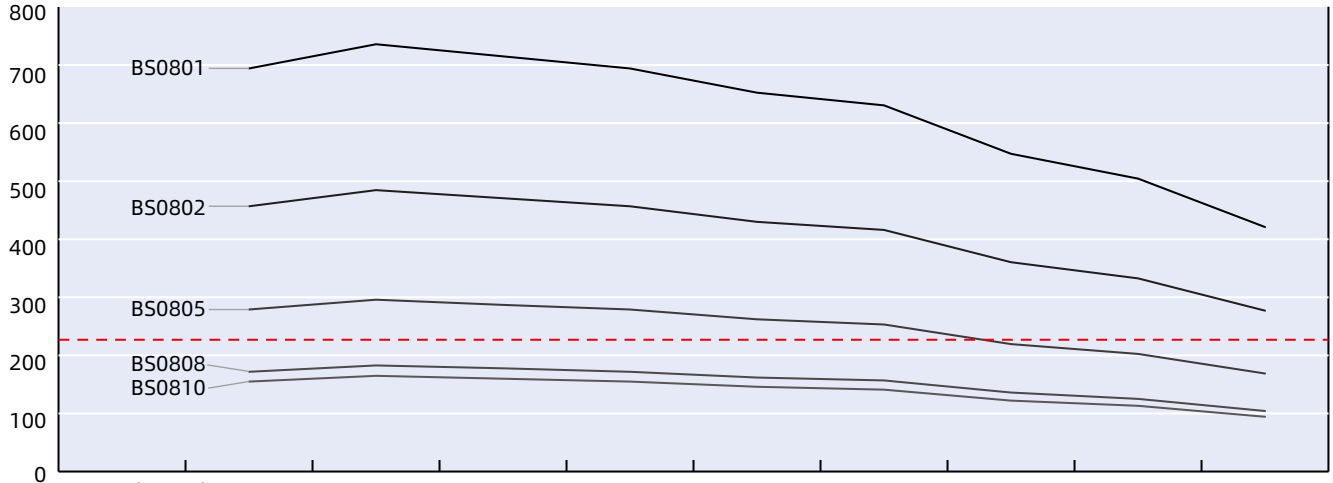

BS0810(mm/s)	5	10	20	25	50	75	100	125	150
BS0808(mm/s)	4	8	16	20	40	60	80	100	120
BS0805(mm/s)	2.5	5	10	12.5	25	37.5	50	62.5	75
BS0802(mm/s)	1	2	4	5	10	15	20	25	30
BS0801(mm/s)	0.5	1	2	2.5	5	7.5	10	12.5	15
Speed r/min	30	60	120	150	300	450	600	750	900
Pulse pps	100	200	400	500	1000	1500	2000	2500	3000

TEST CONDITION

Testing Voltage: 24Vdc, Driver Model: DS-OLS2-FPD bipolar, chopper driver at rated current (rms).
Motor thrust may vary depending on voltage and driver conditions. 50% thrust margin is recommended.

J Gripper

Based on our own design and development of through motor foundation, the stroke of 6mm and 12mm Gripper can be selected.

The structure is compact and simple, which can replace the pneumatic clamping claw, reduce the operation noise, and effectively improve the accuracy.

High resolution of encoder based closed loop torque control Motion Controller is optional.

Part number construction	J-2
Gripper 20mm (Stroke Length 6mm)	J-3
Gripper 28mm (Stroke Length 6mm / 12mm)	J-5
35mm 3-Finger Gripper	J-8
42mm 3-Finger Gripper	J-10

Part Number Construction

DMEG 12 - 11 N 2 1 10 D 4 - EK5D - 001

① ② ③ ④ ⑤ ⑥ ⑦ ⑧ ⑨ ⑩ ⑪

① Product Name
Electric Gripper

② Stroke (mm)
12 = 12 mm

③ Motor Size

Motor Size (mm)	20	28	35	42
Motor Size (NEMA)	8	11	14	17

④ Motor Type
N = Non-Captive type

⑤ Motor Step Angle
2 = 2-phase, 1.8° step angle

⑥ Motor Length
1 = Single stack
2 = Double stack

⑦ Rated Current / Phase
XX = X.X (A) / Phase

⑧ Lead Screw Code
Please refer to the lead screw code selection table

⑨ Number of Lead Wires
4 = 4-wire leads
6 = 6-wire leads

⑩ Option
EKX = Encoder [X = Encoder Resolution]
ER = Encoder Ready

⑪ Customer Sequence Number

Example

Part Number	DMEG12-11N2110D4-EK5D-001
Description	Electric Gripper 12mm Stroke NEMA 11 Non-Captive Linear Actuator 2-phase / 1.8° Stepper Single Stack 1.0A / Phase D Lead (0.05" or 1.27mm) 4-wire leads EK5 Encoder with differential output 1,000 lines Serial Number 001

20mm Gripper (6mm Stroke)

Motor Characteristics

Motor	Voltage (V)	Current (A [RMS])	Resistance (Ω)	Inductance (mH)	Lead wires	Motor length (mm)
8N2105	2.5	0.5	5.1	1.5	4	27.2
8N2205	4.4	0.5	8.8	2.7	4	38.1

Available Lead Screw and Travel per Step

Screw Dia. (inch)	Screw Dia. (mm)	Lead (inch)	Lead (mm)	Lead Code	Travel Per Step @1.8° (mm)*
0.128	3.24	0.0394	1	AB	0.005
0.138	3.5	0.0787	2	G	0.01
0.138	3.5	0.1575	4	M	0.02

Gripping Force Recommendation

Motor Size	Body Length (mm)	Part Code	Stroke	Lead Code	Lead (mm)	Max. Gripping Force (N)	Recommended Gripping Force (N)
20mm	27.2	8N2105	6mm	AB	1	25	13
				G	2	21	11
				M	4	11	6
	38.1	8N2205	6mm	AB	1	50	25
				G	2	36	18
				M	4	32	16

Gripper Weight

Part Number	Weight (kg)
DMEG06-8N21	0.148
DMEG06-8N22	0.171

For customized options, please contact DINGS' or your local distributor

20mm Gripper (6mm Stroke)

Dimensional Drawings

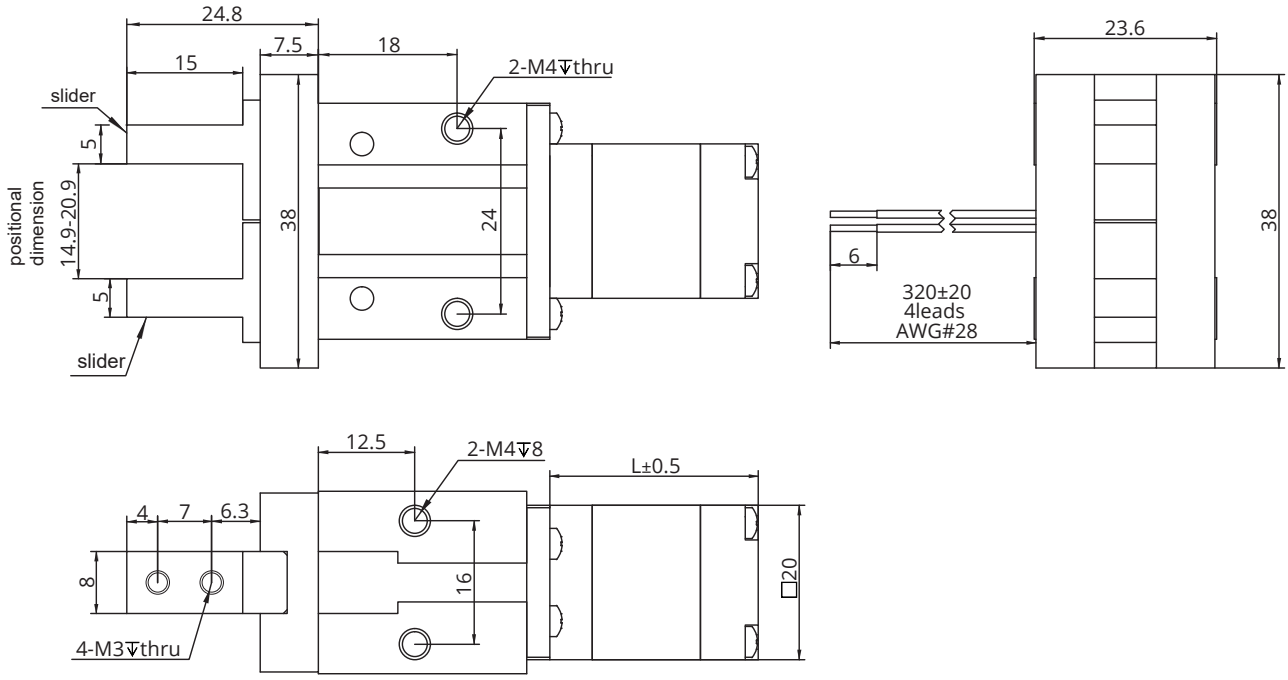

Note : All drawings are 1st-angle projection - ISO Compliant (3D models available)

28mm Gripper (6mm / 12mm Stroke)

Motor Characteristics

Motor	Voltage (V)	Current (A [RMS])	Resistance (Ω)	Inductance (mH)	Lead wires	Motor length (mm)
11N2105	4.5	0.5	9.1	6	4	33.5
11N2110	2.1	1	2.1	1.5	4	33.5
11N2210	4.1	1	4.1	4	4	45
11N2216	2.4	1.6	1.5	1.3	4	45

Available Lead Screw and Travel per Step

Screw Dia. (inch)	Screw Dia. (mm)	Lead (inch)	Lead (mm)	Lead Code	Travel Per Step @1.8° (mm)*
0.188	4.77	0.025	0.635	A	0.003175
0.188	4.77	0.05	1.27	D	0.00635
0.188	4.77	0.1	2.54	K	0.0127
0.188	4.77	0.2	5.08	R	0.0254

Gripping Force Recommendation

Motor Size	Body Length (mm)	Part Code	Stroke	Lead Code	Lead (mm)	Max. Gripping Force (N)	Recommended Gripping Force (N)
28mm	33.5	11N2105 / 2110	6 / 12 mm	A	0.635	110	55
				D	1.27	84	42
				K	2.54	56	28
				R	5.08	36	18
	45	11N2210 / 2216	6 / 12 mm	A	0.635	140	70
				D	1.27	120	60
				K	2.54	100	50
				R	5.08	60	30

Gripper Weight

Part Number	Weight (kg)
DMEG06-11N21	0.246
DMEG06-11N22	0.302
DMEG12-11N21	0.25
DMEG12-11N22	0.306

For customized options, please contact DINGS' or your local distributor

28mm Gripper (6mm / 12mm Stroke)

Dimensional Drawings

6mm Stroke

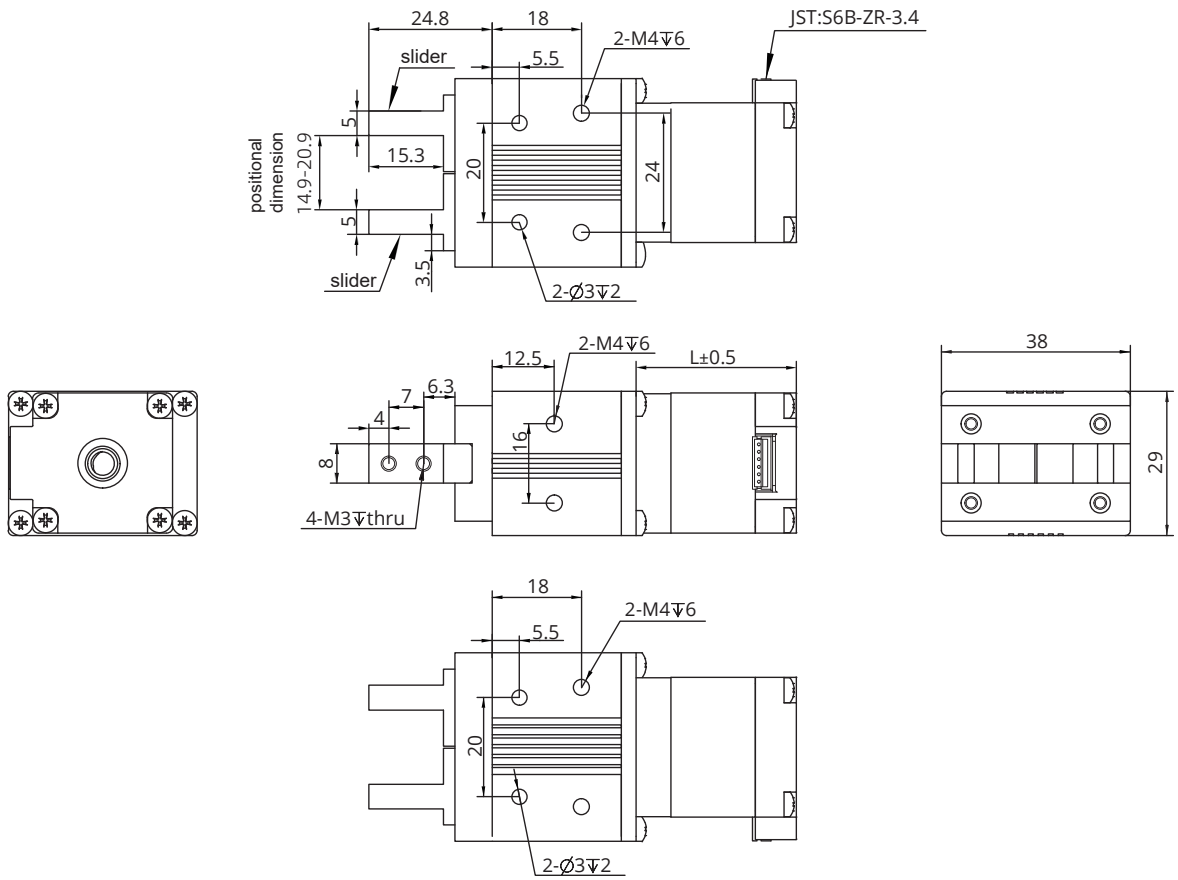

Note : All drawings are 1st-angle projection - ISO Compliant (3D models available)

28mm Gripper (6mm / 12mm Stroke)

- 12mm Stroke

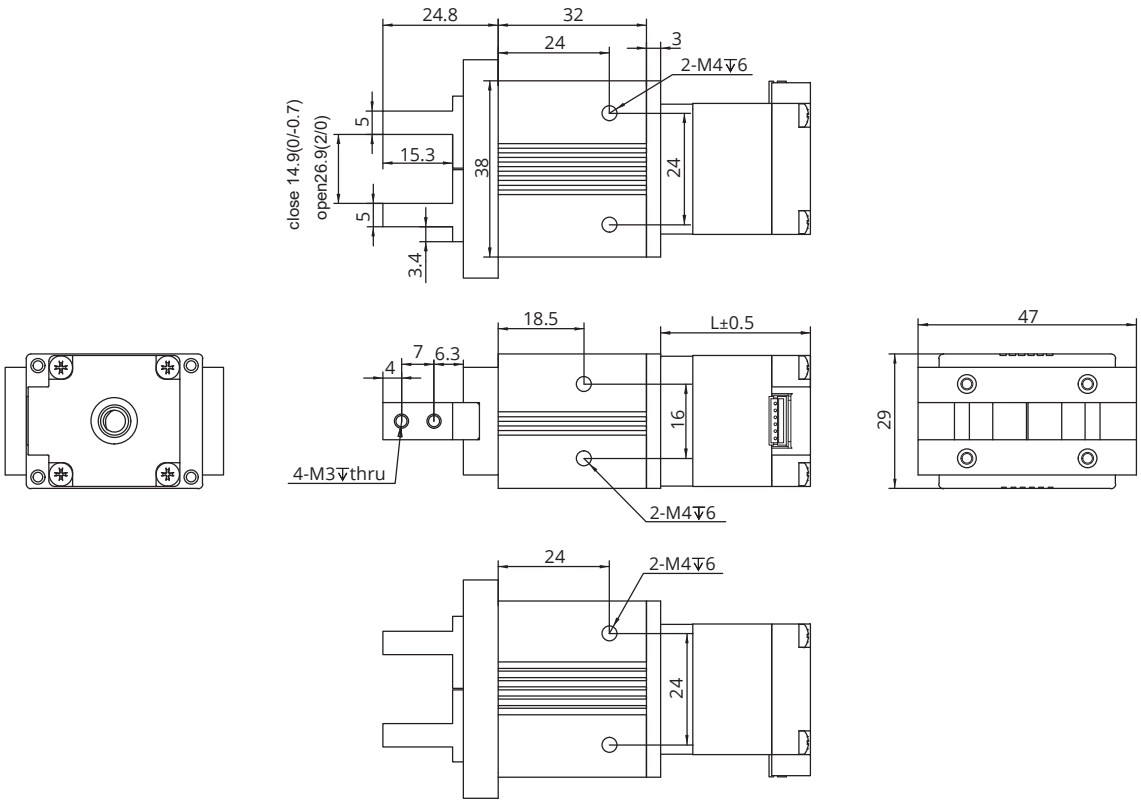

Note : All drawings are 1st-angle projection - ISO Compliant (3D models available)

35mm 3-Finger Gripper

Motor Characteristics

Motor	Voltage (V)	Current (A [RMS])	Resistance (Ω)	Inductance (mH)	Weight (g)	Lead wires	Motor length (mm)
14N2105	6.6	0.5	13.2	14	189	4	33.6
14N2110	3.5	1	3.5	3.6	189	4	33.6
14N2115	2.7	1.5	1.8	1.9	189	4	33.6
14N2205	12	0.5	24	29	210	4	45.6
14N2210	6	1	6	7.2	210	4	45.6
14N2215	4	1.5	2.7	3.2	210	4	45.6

Available Lead Screw and Travel per Step

Screw Dia. (inch)	Screw Dia. (mm)	Lead (inch)	Lead (mm)	Lead Code	Travel Per Step @1.8° (mm)*
0.25	6.35	0.024	0.6096	AA	0.003
0.25	6.35	0.05	1.27	D	0.0064
0.25	6.35	0.1	2.54	K	0.0127
0.25	6.35	0.2	5.08	R	0.0254

Gripping Force Recommendation

Motor Size	Body Length (mm)	Part Code	Stroke	Lead Code	Lead (mm)	Max. Gripping Force (N)	Recommended Gripping Force (N)
35mm	33.6	14N2105 / 2110 / 2115	6 mm	AA	0.6096	85	42.5
				D	1.27	73	36.5
				K	2.54	42	21
				R	5.08	21	10.5
	45.6	14N2205 / 2210 / 2215	6 mm	AA	0.6096	193	96.5
				D	1.27	184	92
				K	2.54	110	55
				R	5.08	67	33.5

Gripper Weight

Part Number	Weight (kg)
DMEG06-14N21	0.227
DMEG06-14N22	0.248

For customized options, please contact DINGS' or your local distributor

35mm 3-Finger Gripper

Dimensional Drawings

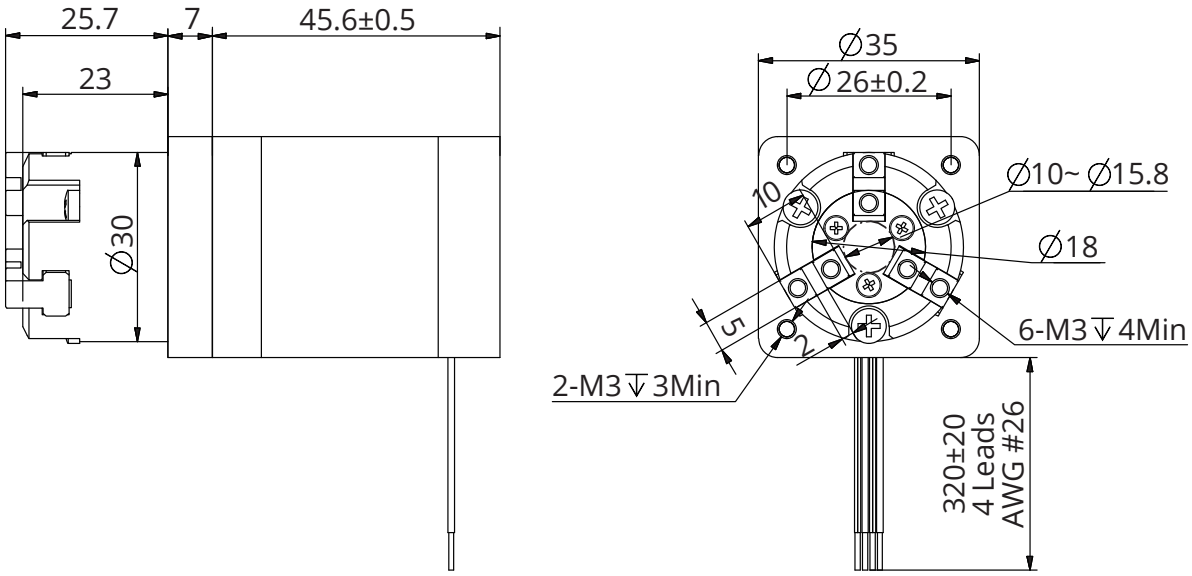

Note : All drawings are 1st-angle projection - ISO Compliant (3D models available)

42mm 3-Finger Gripper

Motor Characteristics

Motor	Voltage (V)	Current (A [RMS])	Resistance (Ω)	Inductance (mH)	Weight (g)	Lead wires	Motor length (mm)
17N2105	7.2	0.5	14.4	19.8	254	4	34.1
17N2110	3.8	1	3.8	5	254	4	34.1
17N2115	2.85	1.5	1.9	2.2	254	4	34.1
17N2205	11	0.5	22	46	386	4	48.1
17N2212	4.5	1.2	3.8	8	386	4	48.1
17N2225	2.5	2.5	1	1.8	386	4	48.1

Available Lead Screw and Travel per Step

Screw Dia. (inch)	Screw Dia. (mm)	Lead (inch)	Lead (mm)	Lead Code	Travel Per Step @1.8° (mm)*
0.25	6.35	0.024	0.6096	AA	0.003
0.25	6.35	0.05	1.27	D	0.0064
0.25	6.35	0.1	2.54	K	0.0127
0.25	6.35	0.2	5.08	R	0.0254

Gripping Force Recommendation

Motor Size	Body Length (mm)	Part Code	Stroke	Lead Code	Lead (mm)	Max. Gripping Force (N)	Recommended Gripping Force (N)
42mm	34.1	17N2105 / 2110 / 2115	6 mm	AA	0.6096	270	135
				D	1.27	163	81.5
				K	2.54	91	45.5
				R	5.08	56	28
	48.1	17N2205 / 2212 / 2225	6 mm	AA	0.6096	371	185.5
				D	1.27	336	168
				K	2.54	204	102
				R	5.08	146	73

Gripper Weight

Part Number	Weight (kg)
DMEG06-17N21	0.33
DMEG06-17N22	0.462

42mm 3-Finger Gripper

Dimensional Drawings

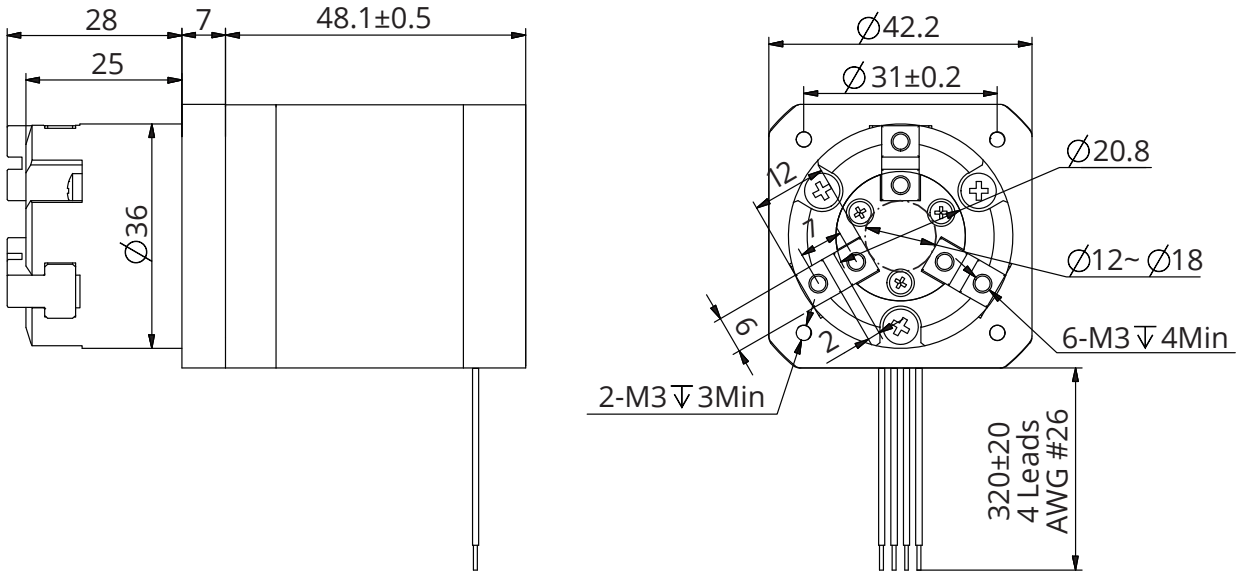

Note : All drawings are 1st-angle projection - ISO Compliant (3D models available)

K Voice Coil Motor / Voice Coil Actuator

DINGS' offers a comprehensive range of Voice Coil Motor (VCM) and Voice Coil Actuator (VCA) solutions, including cylindrical and flat-type Voice Coil Motors and Position Sensor Integrated Voice Coil Linear Actuators, available in various diameters to meet diverse application requirements.

Based on standardized motor diameters, DINGS' provides flexible stroke customization to meet specific application needs. Unlike many competitors that offer only fixed stroke options, DINGS' can customize stroke lengths according to customer requirements.

DINGS' Voice Coil solutions deliver low backlash, fast response, and high precision when combined with dedicated drive solutions. For applications requiring enhanced positioning accuracy, linear scales can also be integrated to provide precise feedback and closed-loop control.

Part number construction	K-2
12.7 mm Voice coil motor	K-3
13.2 mm Voice coil actuator	K-4
25.4 mm Voice coil motor	K-5
30 mm Voice coil motor	K-7
38 mm Voice coil motor	K-11
40 mm Voice coil actuator	K-12
45 mm Voice coil motor	K-13
60 mm Voice coil motor	K-14
60mm Voice coil linear actuator [Position sensor integrated]	K-15
90mm Voice coil linear actuator [Position sensor integrated]	K-16
76 mm Flat voice coil motor	K-17
97 mm Flat voice coil motor	K-18

Part Number Construction

VC - HF - 30 - 10 - 05 - PS - 001

① ② ③ ④ ⑤ ⑥ ⑦

① Motor Type
- VC = Voice Coil Motor
- VCXR = Flat-Type Voice Coil Motor

② Force Version
- None = Standard Series
- HF = High Force Series

③ Frame Size
- 30 = 30mm

④ Stroke
- 10 = 10mm Stroke
- (For custom stroke sizes, please contact DINGS')

⑤ Continuous Force
- 05 = 5N Continuous Force
- (For continuous force, refer to the thrust curve. For custom force requirements, please contact DINGS')

⑥ Position Sensor
- None = Without position sensor
- PS = With position sensor

⑦ Customer Sequence Number
- External dimensions, mounting dimensions, and appearance can be customized as required.

Example

Part Number	VC-30-15-4.63	VCXR-76-20-3.8-001	VC-60-15-40-PS
Description	Voice Coil Motor 30 mm Frame Size 15 mm Stroke 4.63 N Continuous Force	Flat-Type Voice Coil Motor 76 mm Frame Size 20 mm Stroke 3.8 N Continuous Force	Voice Coil Motor 60mm Frame Size 15mm Stroke 40N Continuous Force Position Sensor : Incremental Encoder

12.7mm Voice Coil Motor

Standard type

Motor Characteristics

Motor	Stroke (mm)	Back EMF constant (V/m/s)	Continuous force (N)	Continuous current @100°C (A)	Peak thrust force (N)	Force constant (N/A) @ mid position	Resistance (Ω)	Inductance (mH)	Coil gap (mm)	Coil max. temperature (°C)	Coil assembly weight (g)	Total assembly weight (g)
12.7	4	0.4	0.4	1	3.2	0.4	1.3	0.1	0.38	100	3	7.8

Dimensional Drawings

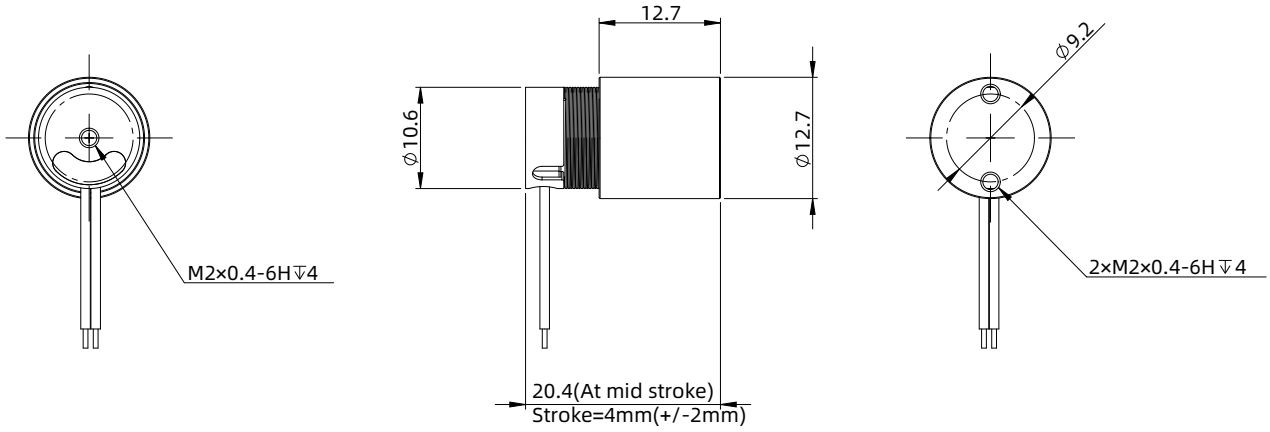

Force Curve

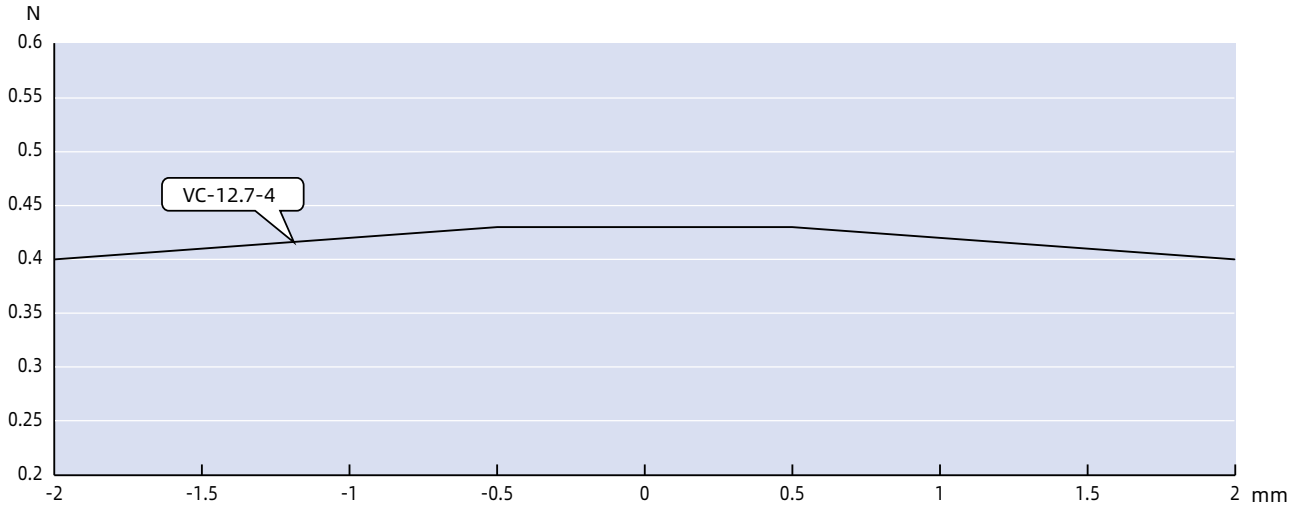

* The force curve is measured at rated current. Actual thrust may vary depending on the applied current.

13.2mm Voice Coil Actuator

High-Force type

Motor Characteristics

Motor	Stroke (mm)	Back EMF constant (V/m/s)	Continuous force (N)	Continuous current @100°C (A)	Peak thrust force (N)	Force constant (N/A) @ mid position	Resistance (Ω)	Inductance (mH)	Coil gap (mm)	Coil max. temperature (°C)	Coil assembly weight (g)	Total assembly weight (g)
13.2	3.8	3.2	2.2	0.7	6.7	3.2	3.5	0.25	0.4	100	12	49

Dimensional Drawings

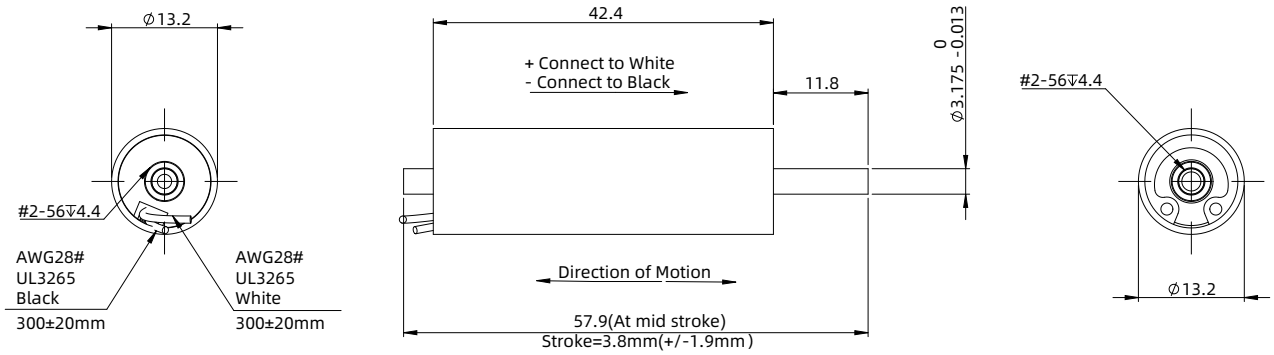

Force Curve

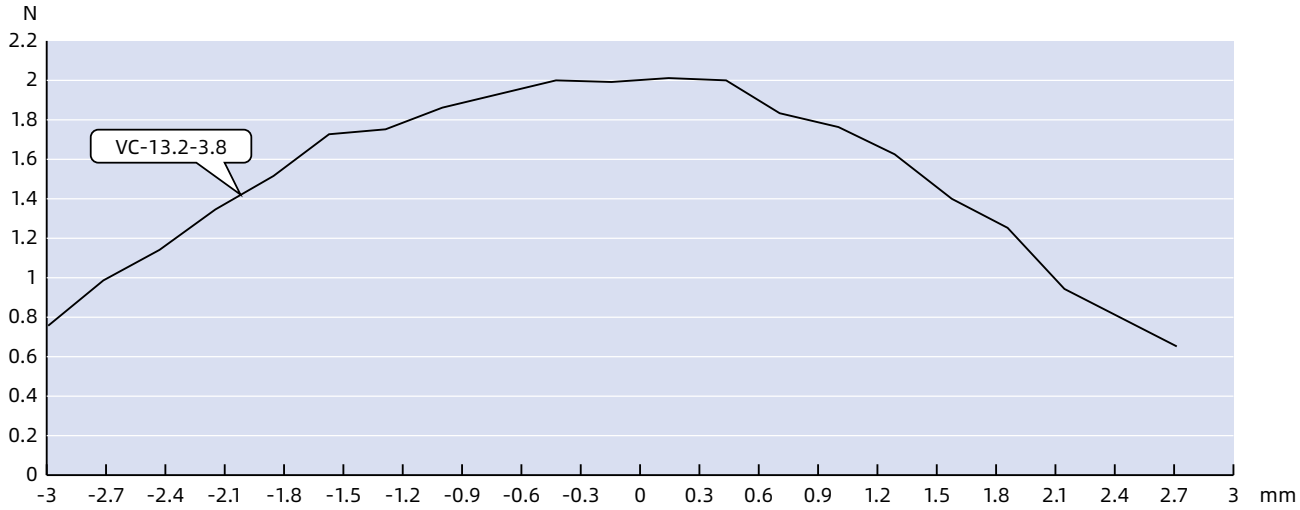

* The force curve is measured at rated current. Actual thrust may vary depending on the applied current.

25.4mm Voice Coil Motor

Standard type

Motor Characteristics

Motor	Stroke (mm)	Back EMF constant (V/m/s)	Continuous force (N)	Continuous current @100°C (A)	Peak thrust force (N)	Force constant (N/A) @ mid position	Resistance (Ω)	Inductance (mH)	Coil gap (mm)	Coil max. temperature (°C)	Coil assembly weight (g)	Total assembly weight (g)
25.4	9.5	9	11	1.25	31	9	6.9	2	0.38	100	33	102

Dimensional Drawings

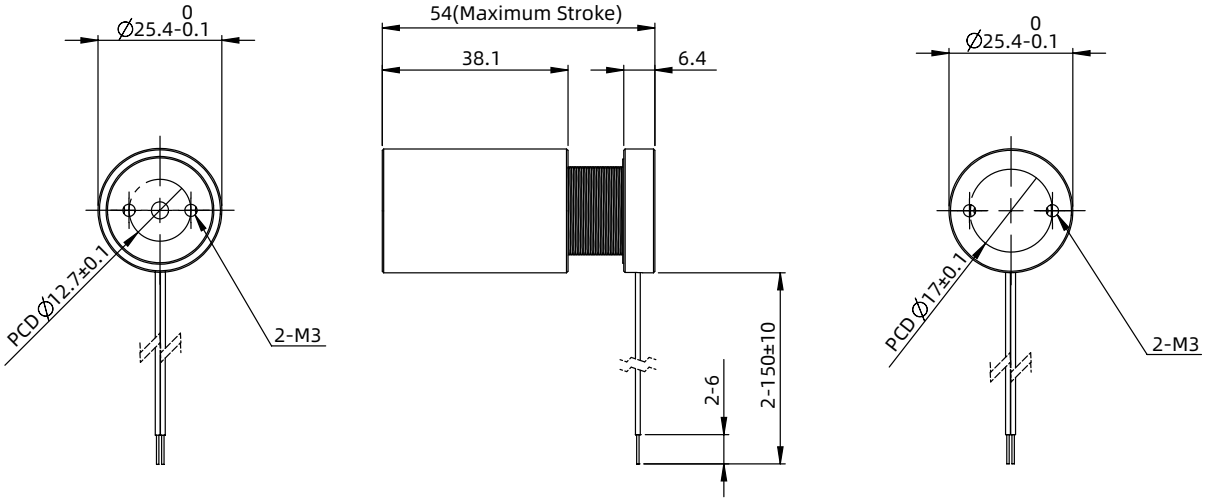

Force Curve

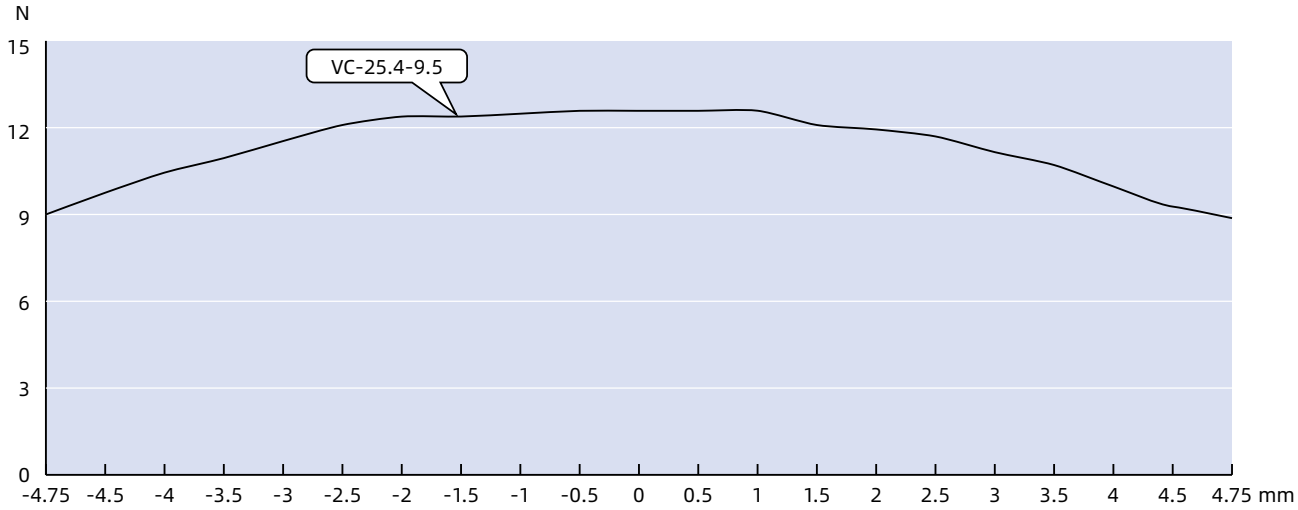

* The force curve is measured at rated current. Actual thrust may vary depending on the applied current.

25.4mm Voice Coil Motor

High-Force type

Motor Characteristics

Motor	Stroke (mm)	Back EMF constant (V/m/s)	Continuous force (N)	Continuous current @100°C (A)	Peak thrust force (N)	Force constant (N/A) @ mid position	Resistance (Ω)	Inductance (mH)	Coil gap (mm)	Coil max. temperature (°C)	Coil assembly weight (g)	Total assembly weight (g)
25.4	30	6	6	1	55	6	17.4	5.04	0.5	100	59	225

Dimensional Drawings

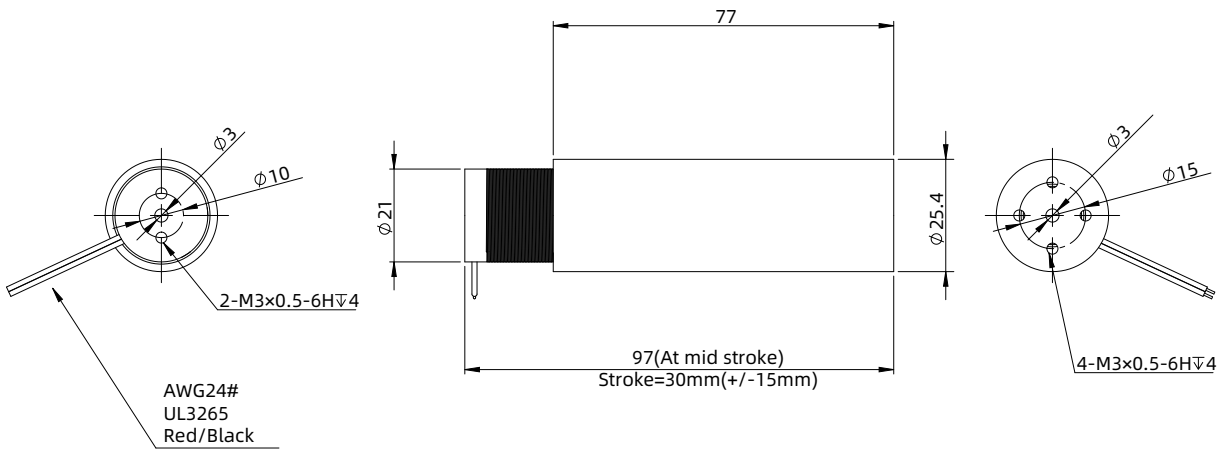

Force Curve

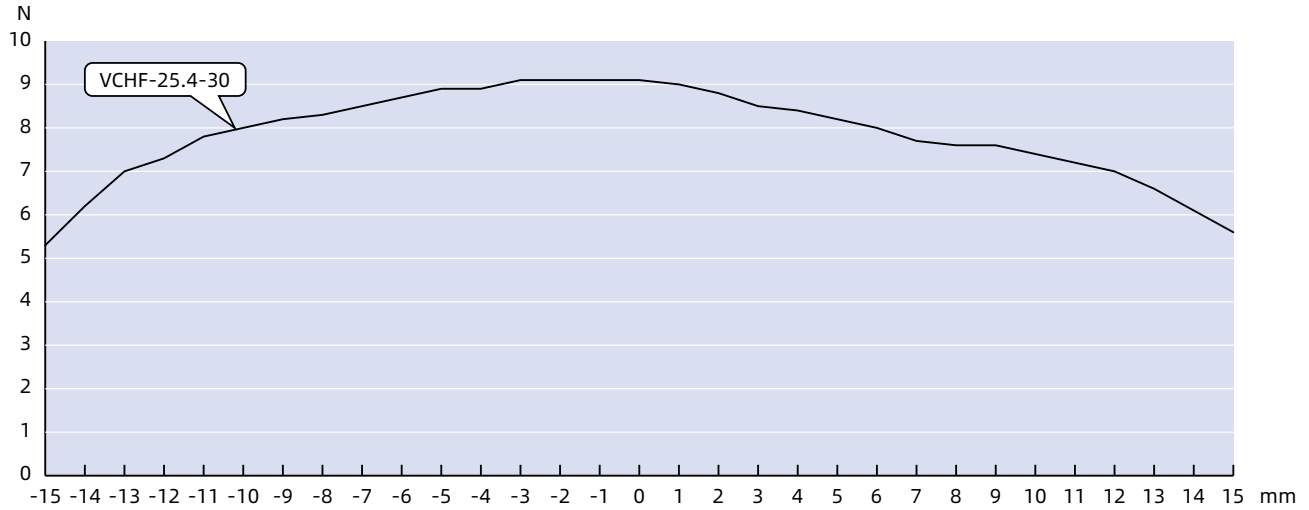

* The force curve is measured at rated current. Actual thrust may vary depending on the applied current.

30mm Voice Coil Motor

Standard type

Motor Characteristics

Motor	Stroke (mm)	Back EMF constant (V/m/s)	Continuous force (N)	Continuous current @100°C (A)	Peak thrust force (N)	Force constant (N/A) @ mid position	Resistance (Ω)	Inductance (mH)	Coil gap (mm)	Coil max. temperature (°C)	Coil assembly weight (g)	Total assembly weight (g)
30	13	7.35	4.63	0.63	29.4	7.35	11.34	2.63	0.6	100	25	96
30	15	7.35	4.63	0.63	29.4	7.35	11.35	2.63	0.6	100	25	96

Dimensional Drawings

- VC-30-13

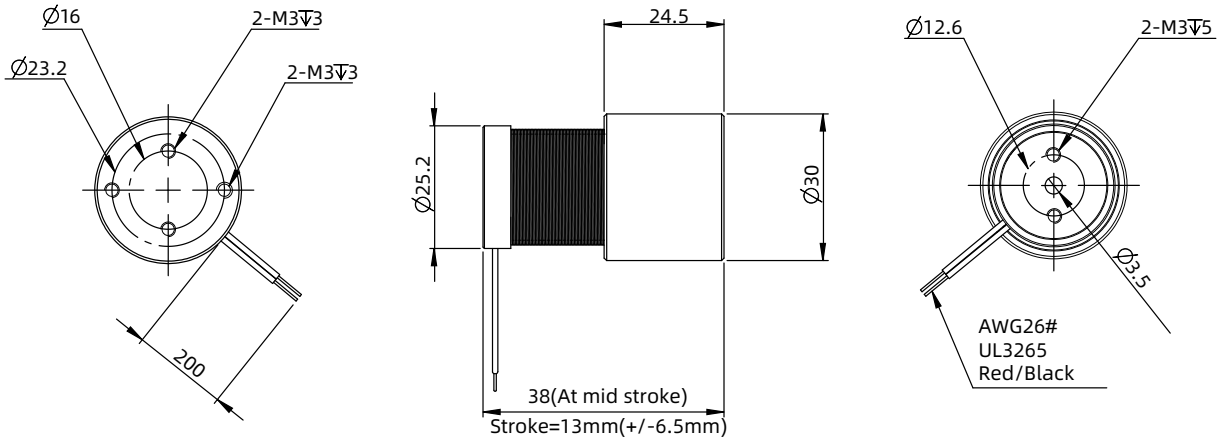

- VC-30-15

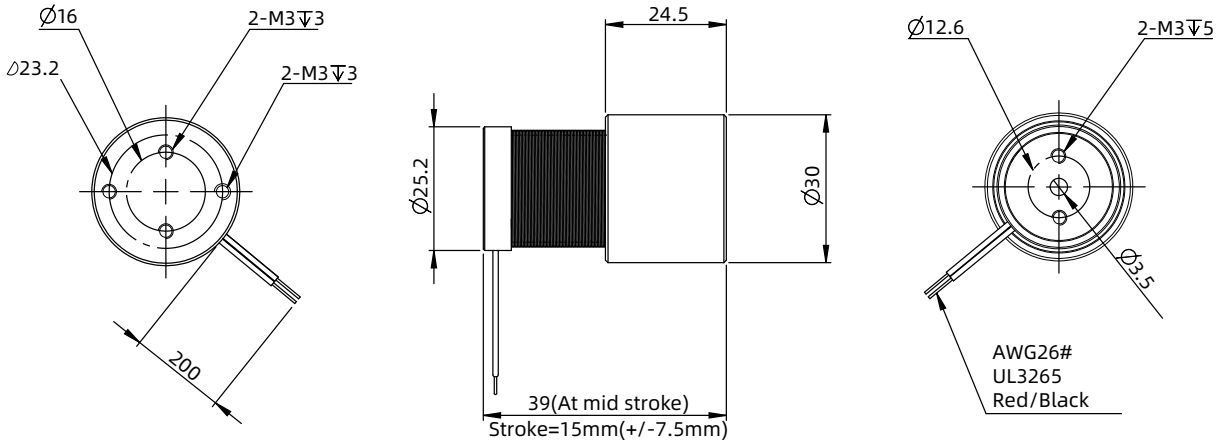

30mm Voice Coil Motor

Force Curve

- VC-30-13

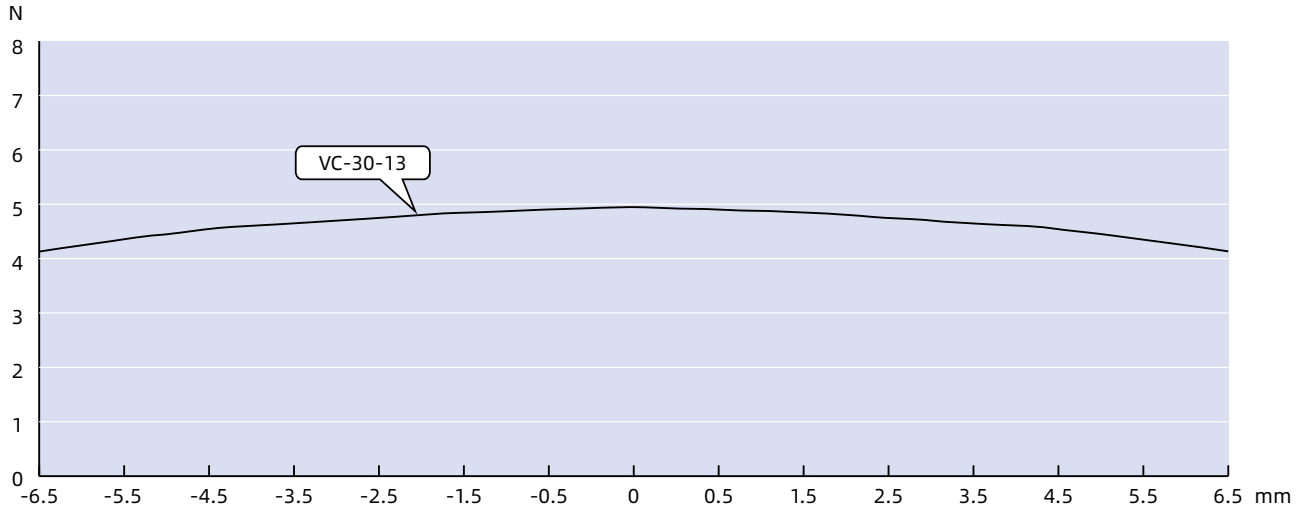

- VC-30-15

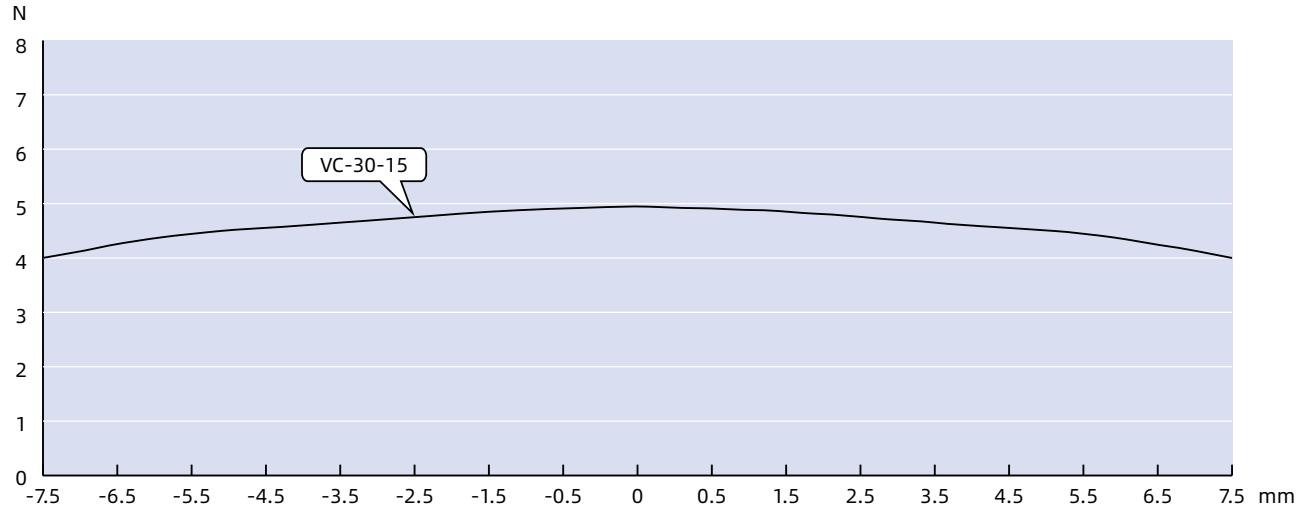

* The force curve is measured at rated current. Actual thrust may vary depending on the applied current.

30mm Voice Coil Motor

High-Force type

Motor Characteristics

Motor	Stroke (mm)	Back EMF constant (V/m/s)	Continuous force (N)	Continuous current @100°C (A)	Peak thrust force (N)	Force constant (N/A) @ mid position	Resistance (Ω)	Inductance (mH)	Coil gap (mm)	Coil max. temperature (°C)	Coil assembly weight (g)	Total assembly weight (g)
30	5	11.87	9.5	0.8	65	11.87	10.15	2.24	0.5	100	41	158
30	12	9.12	13	1.5	80	9.12	5.21	1.9	0.5	100	64	190

Dimensional Drawings

- VCHF-30-5

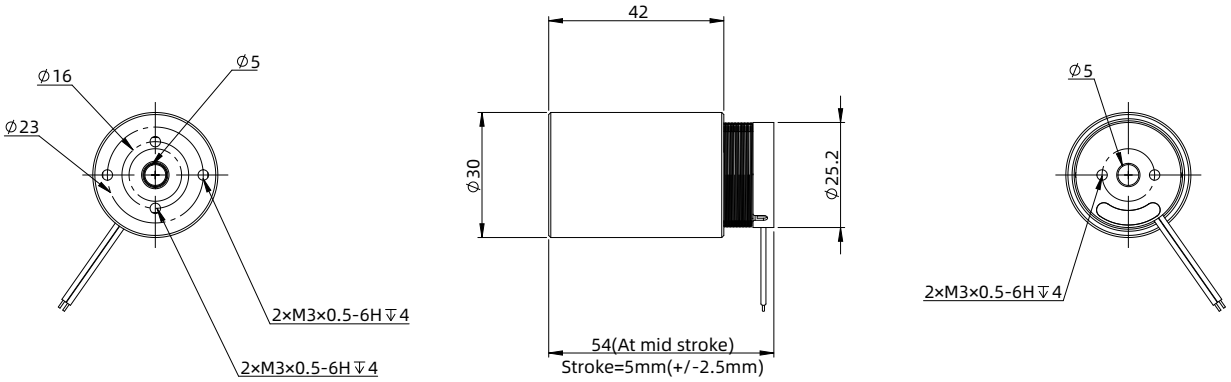

- VCHF-30-12

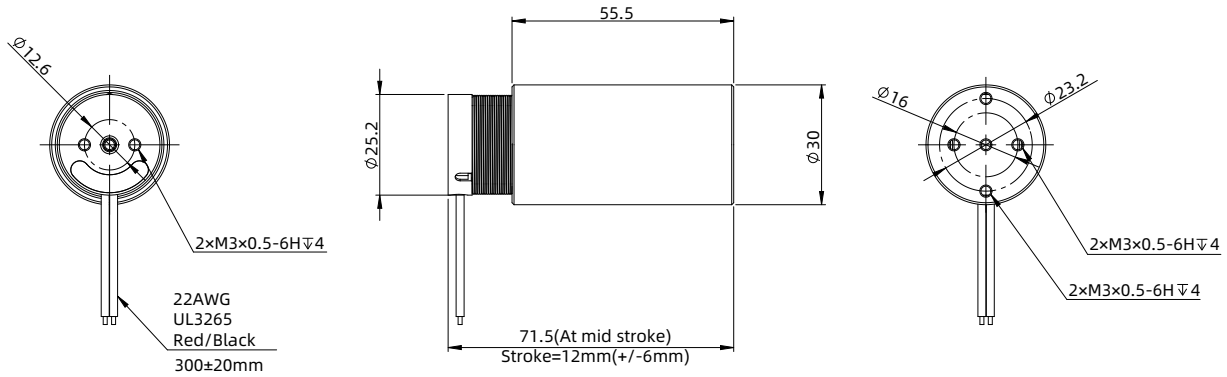

30mm Voice Coil Motor

Force Curve

- VCHF-30-5

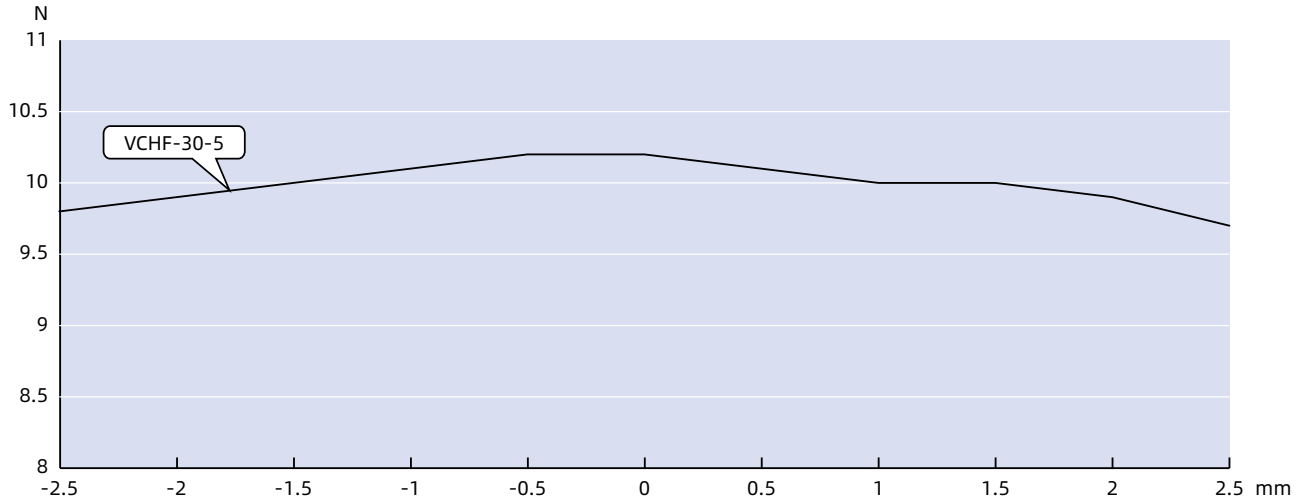

- VCHF-30-12

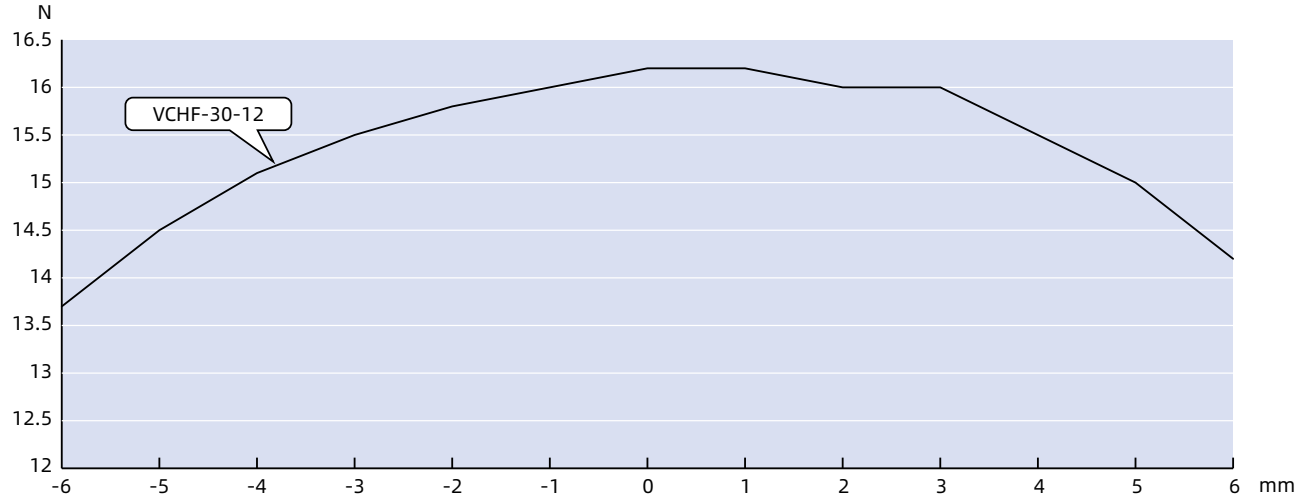

* The force curve is measured at rated current. Actual thrust may vary depending on the applied current.

38mm Voice Coil Motor

High-Force type

Motor Characteristics

Motor	Stroke (mm)	Back EMF constant (V/m/s)	Continuous force (N)	Continuous current @100°C (A)	Peak thrust force (N)	Force constant (N/A) @ mid position	Resistance (Ω)	Inductance (mH)	Coil gap (mm)	Coil max. temperature (°C)	Coil assembly weight (g)	Total assembly weight (g)
38	50	10.1	10	1	78	10.1	10.93	5.21	0.5	100	252	707.3

Dimensional Drawings

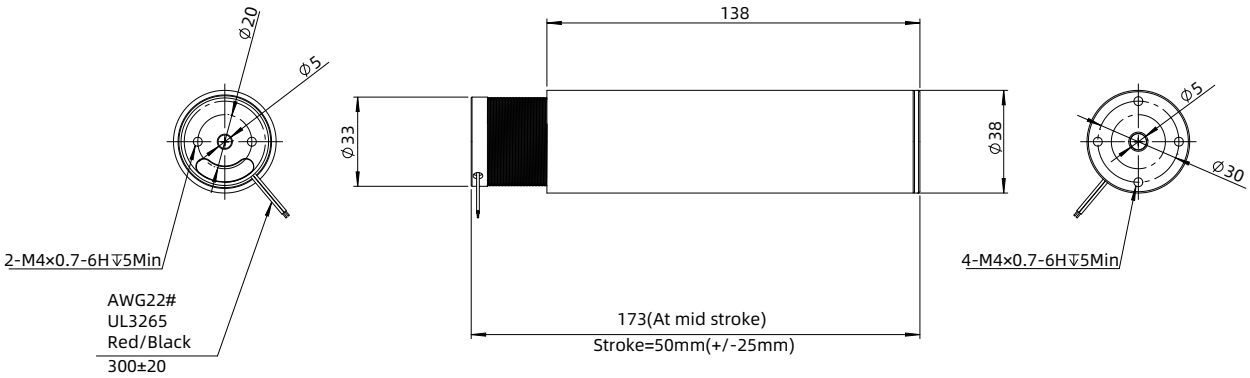

Force Curve

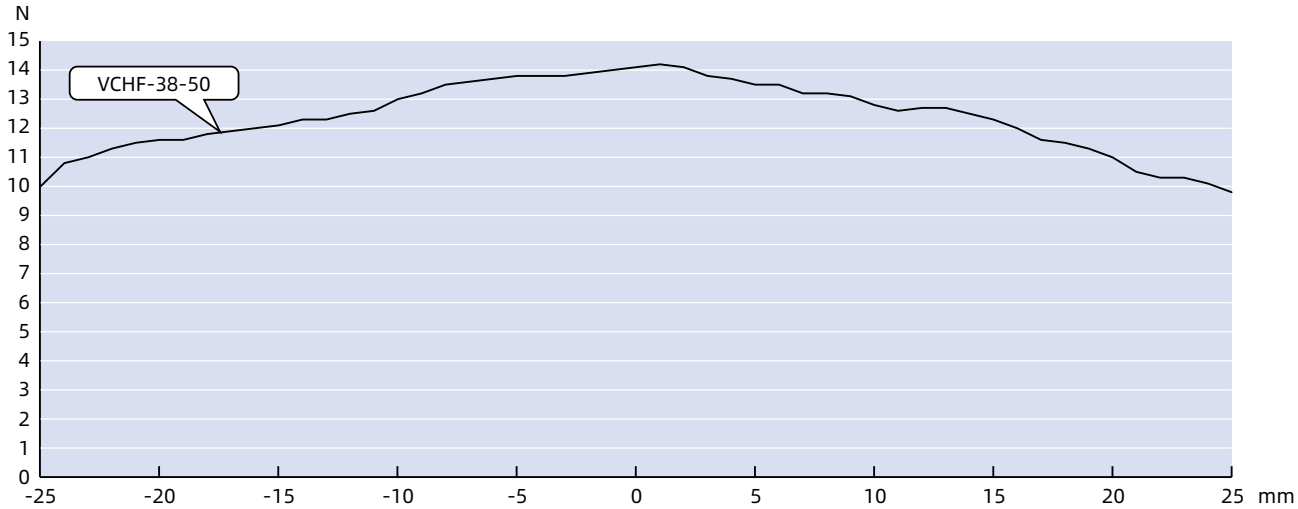

* The force curve is measured at rated current. Actual thrust may vary depending on the applied current.

40mm Voice Coil Actuator

Standard type

Motor Characteristics

Motor	Stroke (mm)	Back EMF constant (V/m/s)	Continuous force (N)	Continuous current @100°C (A)	Peak thrust force (N)	Force constant (N/A) @ mid position	Resistance (Ω)	Inductance (mH)	Coil gap (mm)	Coil max. temperature (°C)	Coil assembly weight (g)	Total assembly weight (g)
40	6	11	11	1	40	11	5	1.32	0.5	100	48	244

Dimensional Drawings

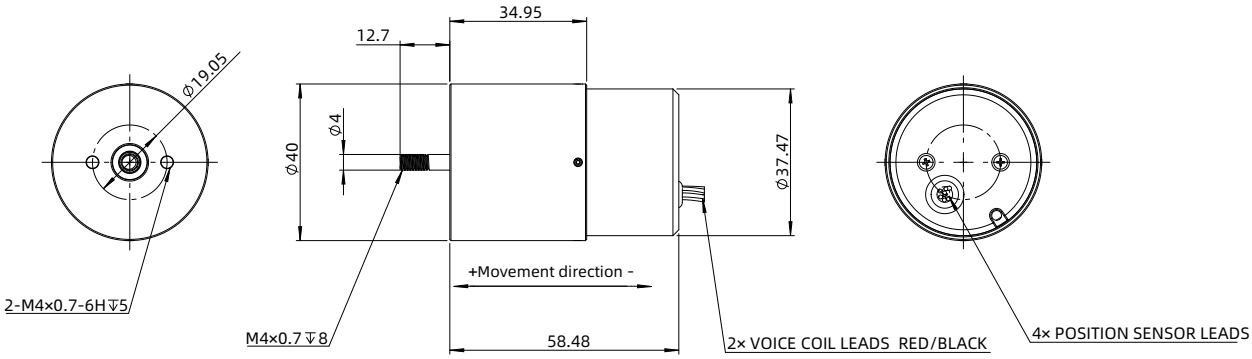

Force Curve

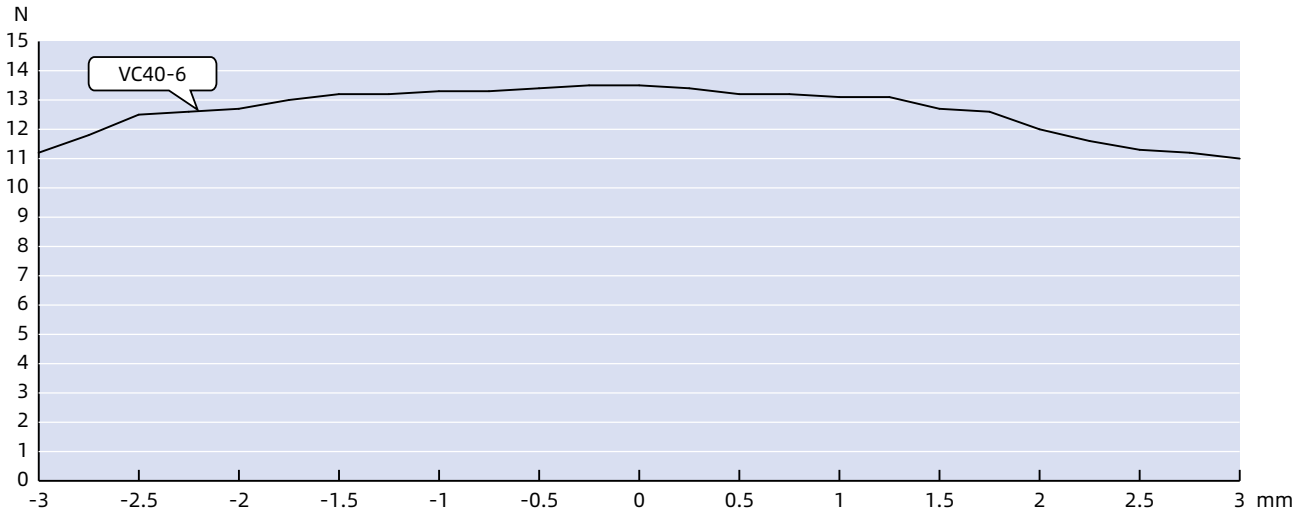

* The force curve is measured at rated current. Actual thrust may vary depending on the applied current.

45mm Voice Coil Motor

High-Force type

Motor Characteristics

Motor	Stroke (mm)	Back EMF constant (V/m/s)	Continuous force (N)	Continuous current @100°C (A)	Peak thrust force (N)	Force constant (N/A) @ mid position	Resistance (Ω)	Inductance (mH)	Coil gap (mm)	Coil max. temperature (°C)	Coil assembly weight (g)	Total assembly weight (g)
45	50	19.1	19	1	120	19.1	14.03	6.45	0.5	100	324	1154

Dimensional Drawings

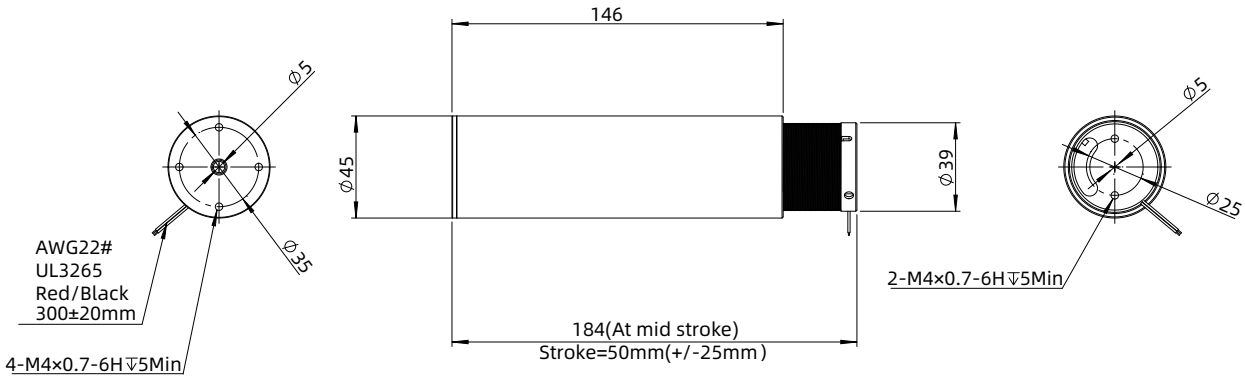

Force Curve

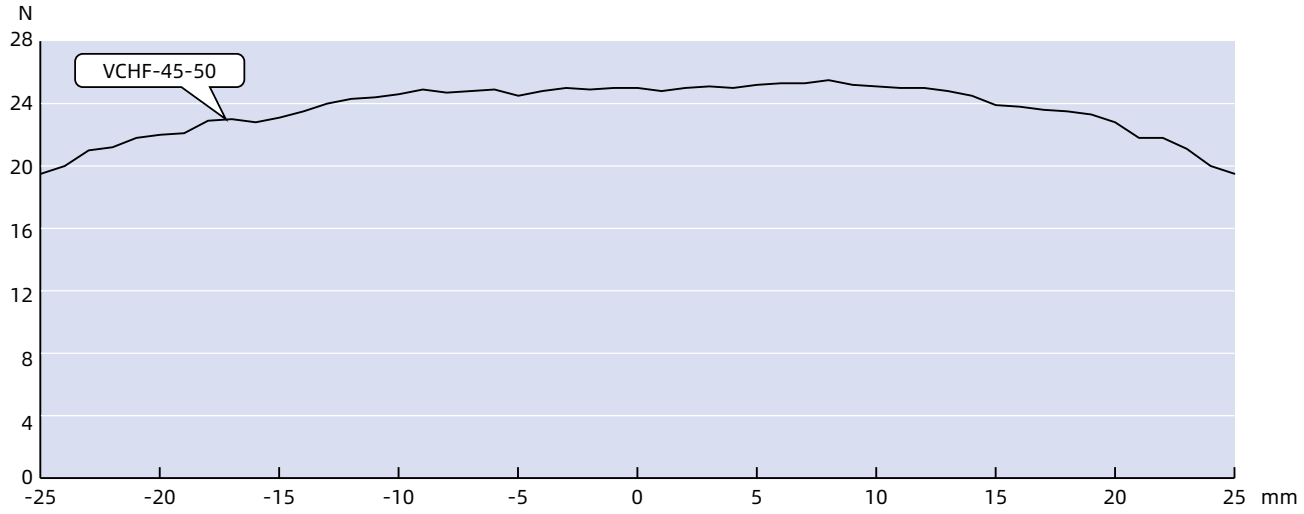

* The force curve is measured at rated current. Actual thrust may vary depending on the applied current.

60mm Voice Coil Motor

High-Force type

Motor Characteristics

Motor	Stroke (mm)	Back EMF constant (V/m/s)	Continuous force (N)	Continuous current @100°C (A)	Peak thrust force (N)	Force constant (N/A) @ mid position	Resistance (Ω)	Inductance (mH)	Coil gap (mm)	Coil max. temperature (°C)	Coil assembly weight (g)	Total assembly weight (g)
60	15	36.66	44	1.2	182	36.66	10.57	3.67	0.7	100	251	1183

Dimensional Drawings

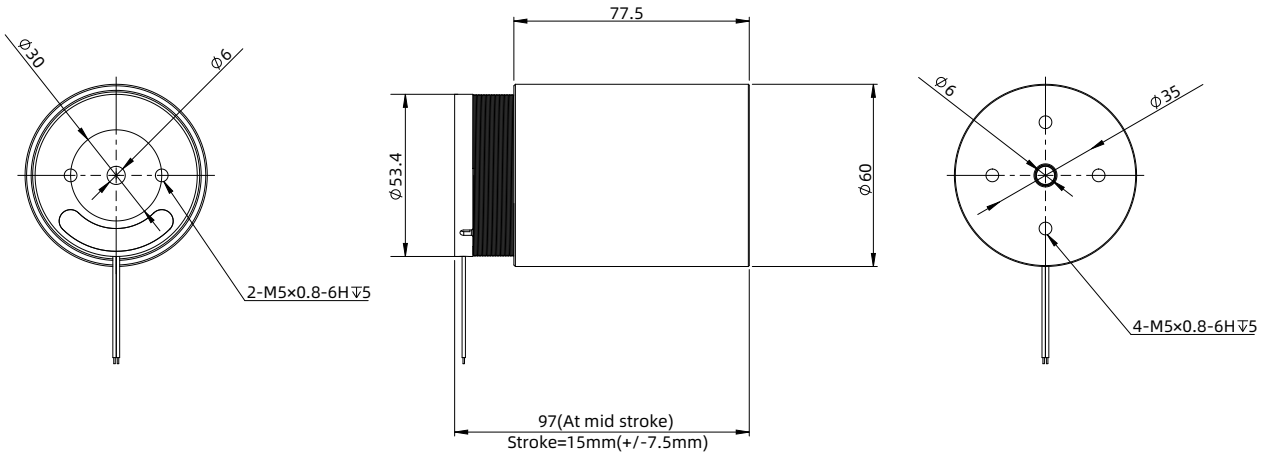

Force Curve

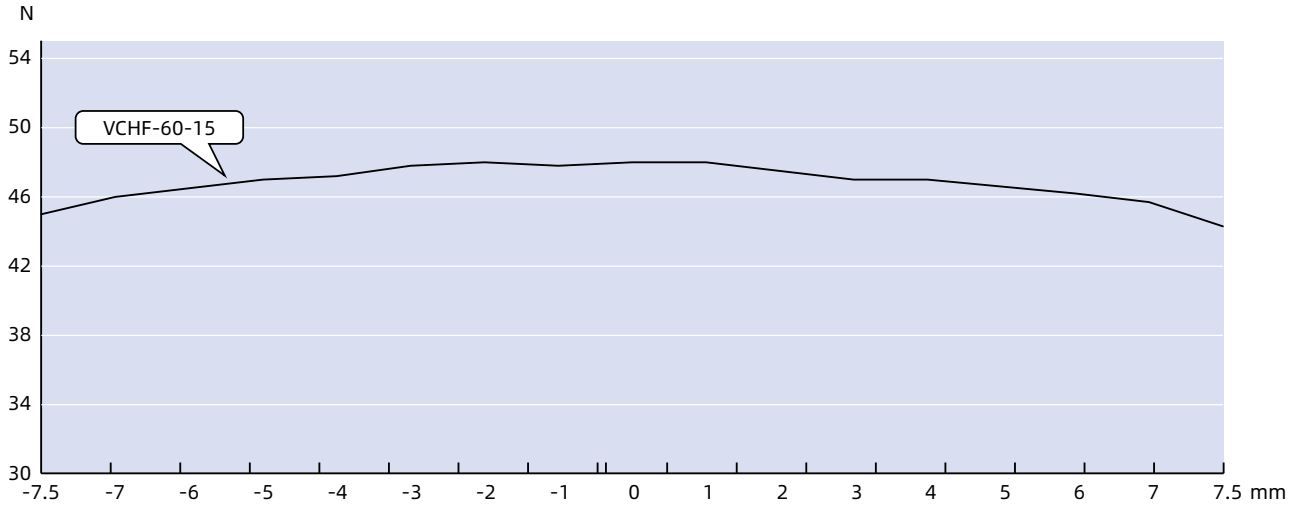

* The force curve is measured at rated current. Actual thrust may vary depending on the applied current.

60mm Voice Coil Linear Actuator [Position Sensor Integrated]

Position sensor integrated

Motor Characteristics

Motor	Stroke (mm)	Back EMF constant (V/m/s)	Continuous force (N)	Continuous current @100°C (A)	Peak thrust force (N)	Force constant (N/A) @ mid position	Resistance (Ω)	Coil gap (mm)	Coil max. temperature (°C)	Peak current (A)	Magnet weight (g)	Insulation Class	Resolution (μm)
60	15	20	40	2	142	20	6.75 ±10%	0.7	155	7	682	B	1

Dimensional Drawings

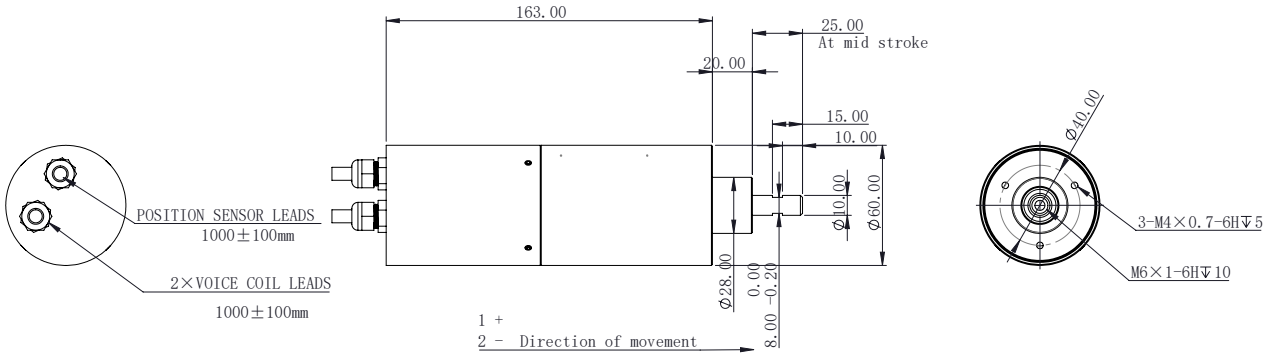

Force Curve

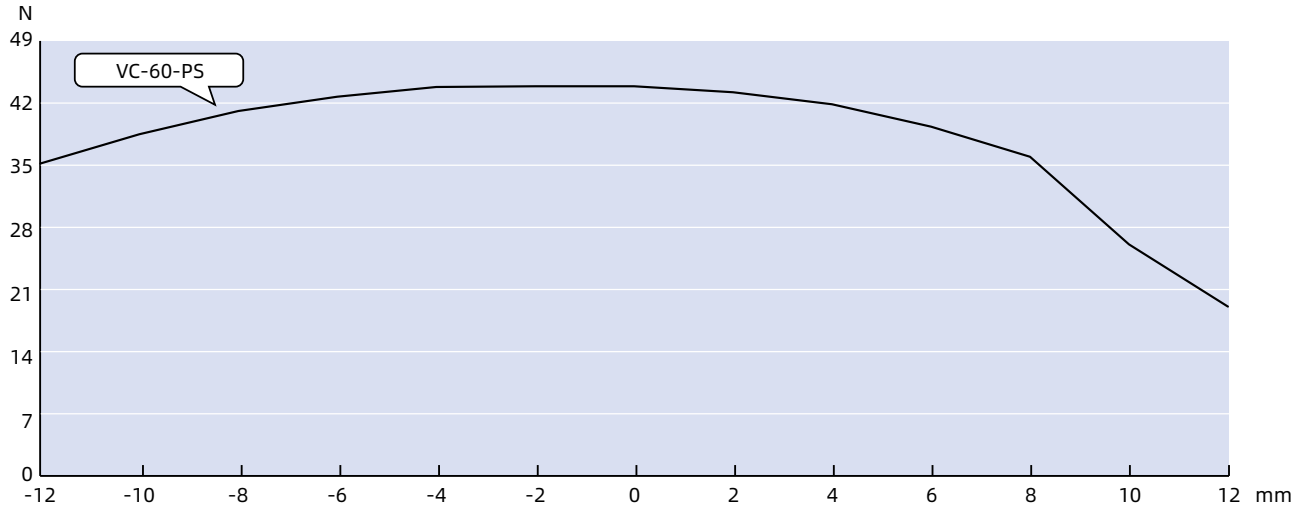

* The force curve is measured at rated current. Actual thrust may vary depending on the applied current.

90mm Voice Coil Linear Actuator [Position Sensor Integrated]

Position sensor integrated

Motor Characteristics

Motor	Stroke (mm)	Back EMF constant (V/m/s)	Continuous force (N)	Continuous current @100°C (A)	Peak thrust force (N)	Force constant (N/A) @ mid position	Resistance (Ω)	Coil gap (mm)	Coil max. temperature (°C)	Peak current (A)	Magnet weight (g)	Insulation Class	Resolution (μm)
90	15	22.5	90	4	340	22.5	4.00 ±10%	0.7	155	15	1055	B	1

Dimensional Drawings

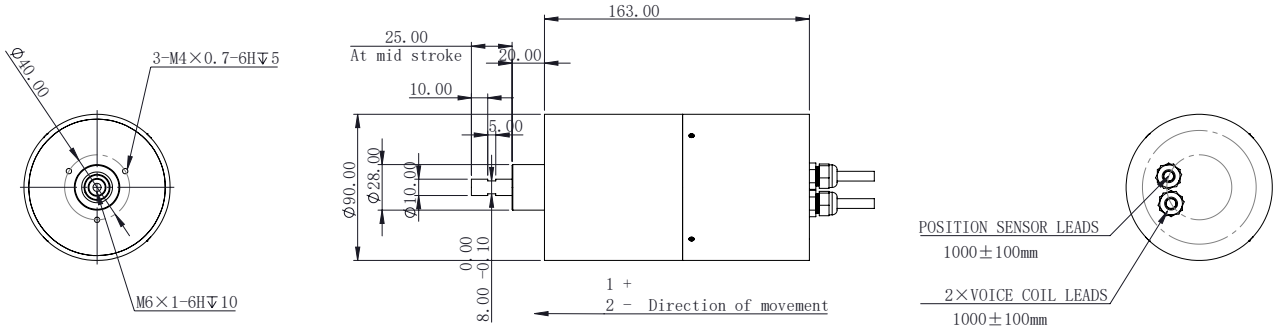

Force Curve

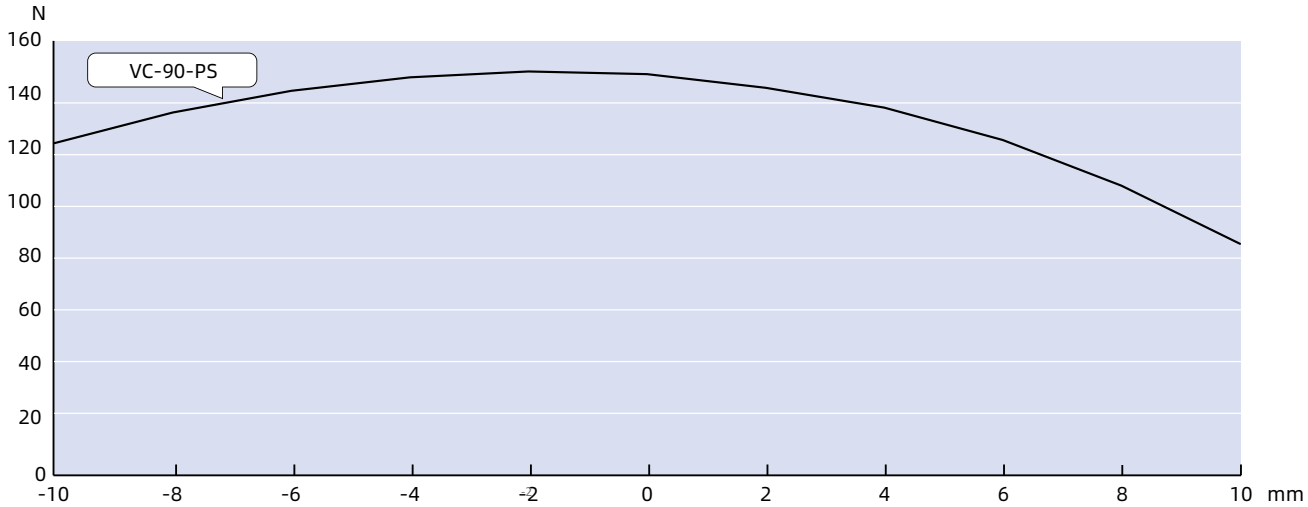

* The force curve is measured at rated current. Actual thrust may vary depending on the applied current.

76mm Flat Voice Coil Motor

Flat type

Motor Characteristics

Motor part number	VCXR-76-20-3.8-001	
Stroke	mm	20
Continuous force	N	3.84
Peak force	N	11.5
Force constant	N/A	1.92
Back EMF constant	V/m/s	1.92
Motor constant	N/√W	1.62
Resistance	Ω	1.4 ±10%
Inductance	mH	0.27 ±10%
Electrical time constant	ms	0.19
Continuous current (Coil at 100°C)	A	2
Peak current	A	6
Continuous power dissipation	W	7.2
Max. coil temperature	°C	155
Max. voltage	Vdc	60
Coil assembly mass	g	22
Magnet weight	g	215
Coil clearance	mm	0.6
Insulation class	-	B

Dimensional Drawings

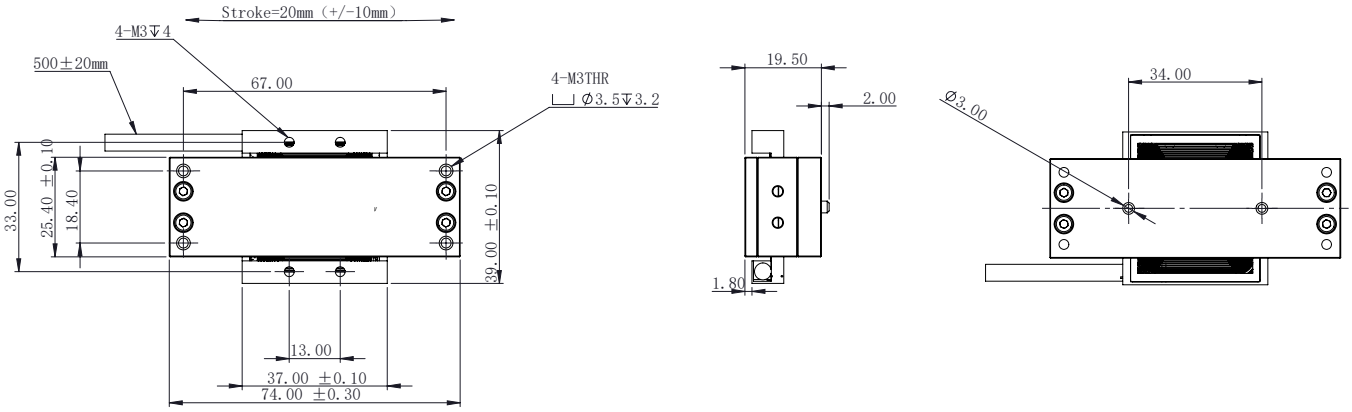

97mm Flat Voice Coil Motor

Flat type

Motor Characteristics

Motor part number	VCXR-97-20-11.69-001	
Stroke	mm	20
Continuous force	N	11.69
Peak force	N	35.1
Force constant	N/A	8.35
Back EMF constant	V/m/s	8.35
Resistance	Ω	3.7 ±10%
Inductance	mH	1.24 ±20%
Electrical time constant	ms	0.35
Continuous current (Coil at 100°C)	A	1.4
Peak current	A	4.2
Max. coil temperature	°C	155
Coil assembly mass	g	45
Magnet weight	g	496
Coil clearance	mm	0.6
Insulation class	-	B

Dimensional Drawings

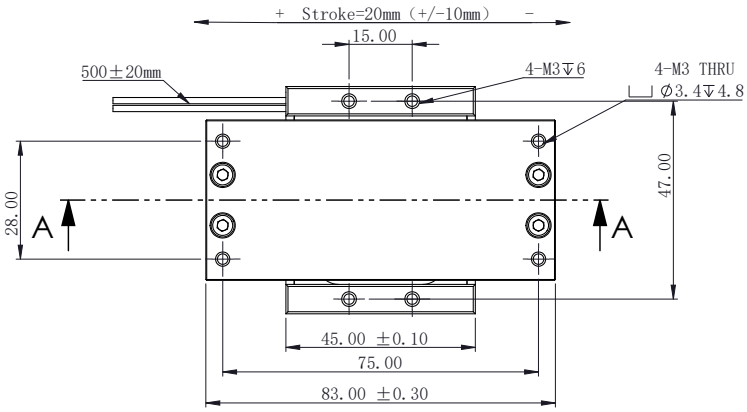

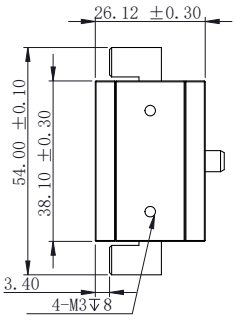

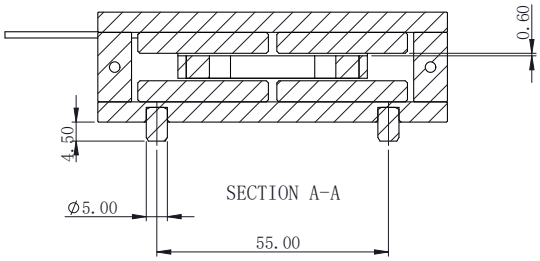

L Motion Controller

DINGS' offers various motion controllers includes drivers and programmable controllers with our hybrid stepper linear actuators, rotary stepper, hollow shaft motors, brushless DC motors and voice coil motors as one package.

From step and direction microstepping driver but also RS485, CANopen and EtherCAT supported open loop / closed loop of motion controllers are available.

DINGS' motion controllers are very specialized for all types of linear actuators includes External, Non-Captive, Captive and Kaptive actuators with encoder or without encoder. These stepper electronics also can be available for regular rotary steppers and also for hollow shaft motors too. Both open and closed loop controls are available.

For Brushless DC motor, DINGS' provides standard and Mini type of motion controllers via CANopen and EtherCAT field bus. These combination can be low-voltage DC Servo which can be alternatives for conventional closed loop stepping control system and AC Servo for certain applications. Also offers dedicated control drive solutions for Voice Coil Motors (VCMs). These solutions support RS-485 communication, analog frequency control, closed-loop position control, and Hall sensor feedback, making them ideal for semiconductor, optical, medical, and precision automation equipment requiring high-speed response and high-precision positioning performance.

Standalone stepper motor driver part number construction	L-2
Integrated stepper motor driver part number construction	L-3
Standalone stepper motor drivers	L-4
BLDC · VCM control drives	L-22
Integrated stepper motor drivers	L-26
Customization options	L-31

Standalone Stepper Motor Driver Part Number Construction

DS - CL S9 - F ETC - 2 A - XXX

① ② ③ ④ ⑤ ⑥ ⑦ ⑧

① DINGS' Brand

② Series
- OL = Open Loop
- CL = Closed Loop
- BV = BLDC / VCM
- OLB = Open Loop Brushless
- CLB = Closed Loop Brushless
- CLS = Closed Loop Servo

③ Frame Number / Size Code
- 20/28/35/42/57/60 = Frame number
- S(x) = S series
- M = M series
- C(x) = Custom series
- ST(x) = ST series
- D(x) = D series
- W(x) = W series

④ Structure Type
- I = Integrated
- F = Stand Alone

⑤ Control Mode
- PD = Pulse/Direction
- SC = Speed Control
- RS4 = RS485
- CAO = CANopen
- ETC = EtherCAT
- SA = Step Servo

⑥ Axis Count
- 1 = Single-axis
- 2 = Dual-axis
- 4 = 4-axis
- 8 = 8-axis

⑦ Encoder
- I = Incremental
- A = Absolute
- N = None

⑧ Customization Requirements
- 00(XX) = Custom serial number
- L = Side Mounting
- T = End Mounting
- 24V = 24V Signal Voltage
- H = Hollow shaft
- C = Closed type
- I = Incremental
- A = Absolute

Example	
Part Number	DS-OL42-FPD
Description	Open Loop 42 Series Integrated Pulse-direction

Example	
Part Number	DS-CLS9-FETC-2A
Description	Closed Loop S9 Series Stand Alone Type EtherCAT Dual Axis Absolute Type

Integrated Stepper Motor Driver Part Number Construction

O H P L 17E2110S4

① ② ③ ④ ⑤

① Control Type
- O = Open Loop
- C = Closed Loop

② Structure
- H = Hollow Shaft Type
- B = Closed Type

③ Control Method
- P = Pulse/Direction
- S = Speed Control Type
- R = RS485 Communication
- C = CANopen Communication
- E = EtherCAT Communication

④ Mounting Type
- L = Side Mounting
- T = Back Mounting

⑤ Product Model

Example

Part Number	OHRT17E2110S4
Description	Open Loop Hollow Shaft RS485 Communication Back Mounting

Standalone Stepper Motor Drivers

DS-OLS2-FPD Driver

Features

1. 32-bit DSP technology
2. Anti-resonance for optimal torque and quiet, low-heat operation
3. Automatic tuning at power-on, selectable via DIP switch
4. Precision current control to minimize motor heating
5. Supports 1 pulse, 2 pulse control, selectable via DIP switch
6. Drives 4,6,8-wire 2-phase stepper motor
7. Opto-isolated input
8. Maximum pulse input frequency: 200kHz
9. Output current adjustable from 0.3 to 2.2A (8 levels) via DIP switch
10. Over-voltage and over-current protections
11. External alarm output, maximum output current 100mA, 24VDC withstand voltage

Specification

Applicable motor		2-phase hybrid stepper motor, max supported current : 2.2A (max.)
Power supply		24 - 36VDC
Output current		0.3A - 2.2A / phase (max.)
Driving method		Full-bridge bipolar PWM drive
Control method		Pulse-direction control
Encoder support		No
Input signal	Pulse signal	Opto-isolated input: H = 3.5–26V, L = 0–0.8V, input current 6–15mA, max. response frequency 200kHz
	Direction signal	
	Enable signal	
Output signal	Alarm output	Opto-isolated output: max. voltage 30VDC, max. current 50mA
Size (excluding connector)		86 × 55 × 20 mm
Weight (excluding connector)		Approx. 90 g
Operating environment	Environment	Avoid dust, oil mist and corrosive gas
	Humidity	< 85% RH, no condensation
	Temperature	0 ~ 40°C
	Cooling	Install in a ventilated environment

Installation (unit : mm)

1. Consider terminal size and cooling space during installation.
2. Recommended temperatures: under 60°C (driver), under 80°C (motor).
3. Install the driver vertically for natural cooling. Add a fan if needed to maintain stable operation.

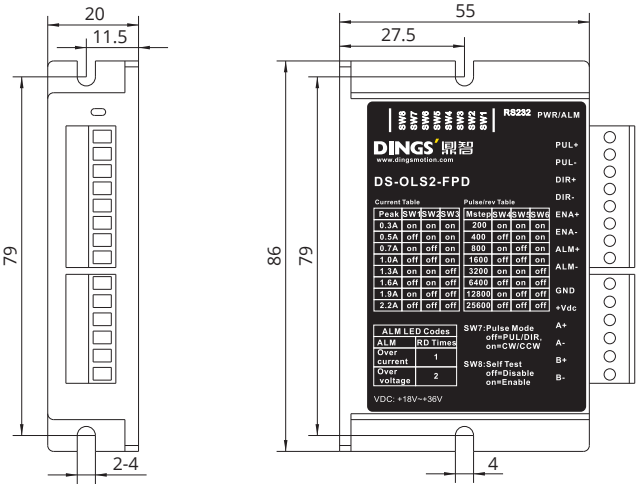

Standalone Stepper Motor Drivers

DS-OLS22-FPD Open-Loop Control - Pulse/Direction type

Features

1. Input power : DC 12V - 48V
2. 8 Output current settings
3. Constant current bipolar microstepping drive
4. Supports 16 micro-step resolutions via DIP switch
5. Supports 1 pulse, 2 pulse control
6. Opto-isolated input
7. Motor short circuit protection
8. Compact design, low noise, low vibration
9. Enable signal function supported

Specification

Applicable motor		2-phase hybrid stepper motor, max supported current : 3A (max.)
Power supply		12 - 48VDC
Output current		0.5A - 3A / phase (max.)
Driving method		Full-bridge bipolar PWM drive
Input signal	Pulse signal	Opto-isolated input: H = 3.5 – 26 V, L = 0 – 0.8 V, input current 6 - 15 mA
	Direction signal	
	Enable signal	
Size (excluding connector)		92.5 × 56 × 21 mm
Weight (excluding connector)		Approx. 96g
Operating environment	Environment	Avoid dust, oil mist and corrosive gas
	Humidity	< 85% RH, no condensation
	Temperature	0 ~ 40°C
	Cooling	Install in a ventilated environment

Installation (unit : mm)

1. Consider terminal size and cooling space during installation.
2. Recommended temperatures: under 60°C (driver), under 80°C (motor).
3. Install the driver vertically for natural cooling. Add a fan if needed to maintain stable operation.

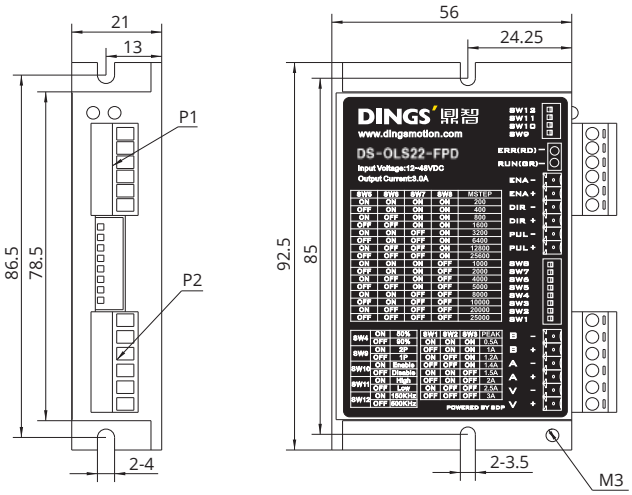

Standalone Stepper Motor Drivers

DS-OLS4-FPD Open-Loop Control - Pulse/Direction type

Features

1. 32-bit DSP technology
2. Anti-resonance for optimal torque and quiet, low-heat operation
3. Built-in high-resolution microstepping, selectable via DIP switch
4. Automatic tuning at power-on, selectable via DIP switch
5. Precision current control to minimize motor heating
6. Automatic idle current reduction to 50% , SW4 selection
7. Supports 1 pulse, 2 pulse control, selectable via DIP switch
8. Drives 4,6,8-wire 2-phase stepper motor
9. Opto-isolated input
10. Maximum pulse input frequency: 200kHz
11. 4-bit DIP switch for 16-level microstepping resolution
12. Over-voltage and over-current protections
13. External alarm output, maximum output current 100mA, 24VDC withstand voltage

Specification

Applicable motor		2-phase hybrid stepper motor, max supported current : 4.2A (max.)	
Power supply		24 - 48VDC	
Output current		1.0A - 4.2A / phase (max.)	
Driving method		Full-bridge bipolar PWM drive	
Control method		Pulse-direction control	
Encoder support		No	
Input signal	Pulse signal Direction signal	DIP selectable 24V signal	Opto-isolated input: H = 18–28V, L = 0–0.8V, input current 6–15mA, max. response frequency 200kHz
		DIP selectable 5V signal	Opto-isolated input: H = 3.5–5V, L = 0–0.8V, input current 6–15mA, max. response frequency 200kHz
	Enable signal	Opto-isolated input: H = 3.5–26V, L = 0–0.8V, input current 6–15mA	
Output signal	Alarm output	Opto-isolated output: max. voltage 30VDC, max. current 100mA	
Size (excluding connector)		118 × 75.5 × 25.5 mm	
Weight (excluding connector)		Approx. 240 g	
Operating environment	Environment	Avoid dust, oil mist and corrosive gas	
	Humidity	< 85% RH, no condensation	
	Temperature	0 ~ 40°C	
	Cooling	Install in a ventilated environment	

Installation (unit : mm)

1. Consider terminal size and cooling space during installation.
2. Recommended temperatures: under 60°C (driver), under 80°C (motor).
3. Install the driver vertically for natural cooling. Add a fan if needed to maintain stable operation.

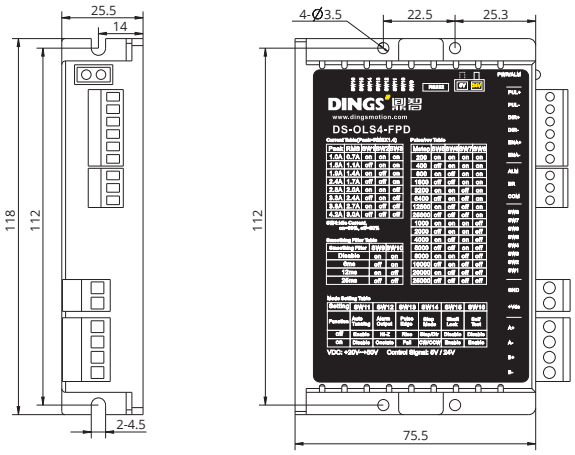

Standalone Stepper Motor Drivers

DS-OLS8-FPD Open-Loop Control - Pulse/Direction type

Features

1. Input power : DC 24V - 72V
2. 8 Output current settings
3. Constant current bipolar microstepping drive
4. Supports 16 micro-step resolutions
5. Supports 1 pulse, 2 pulse control
6. Opto-isolated input, compatible with 5–24VDC signals
7. Motor short circuit protection
8. Test run function
9. Compact design, low noise, low vibration
10. Enable signal function supported

Specification

Applicable motor		2-phase hybrid stepper motor, max supported current : 7.8A (max.)
Power supply		24 - 72VDC
Output current		2.8A - 7.8A / phase (max.)
Driving method		Full-bridge bipolar PWM drive
Control method		Pulse-direction control
Encoder support		No
Input signal	Pulse signal	Opto-isolated input: H = 3.5–26V, L = 0–0.8V, input current 6–15mA, max. response frequency 500kHz
	Direction signal	
	Enable signal	
Output signal	Alarm output	Opto-isolated output: max. voltage 30VDC, max. current 50mA
Size (excluding connector)		118 × 77 × 34 mm
Weight (excluding connector)		Approx. 300g
Operating environment	Environment	Avoid dust, oil mist and corrosive gas
	Humidity	< 85% RH, no condensation
	Temperature	0 ~ 40°C
	Cooling	Install in a ventilated environment

Installation (unit : mm)

1. Consider terminal size and cooling space during installation.
2. Recommended temperatures: under 60°C (driver), under 80°C (motor).
3. Install the driver vertically for natural cooling. Add a fan if needed to maintain stable operation.

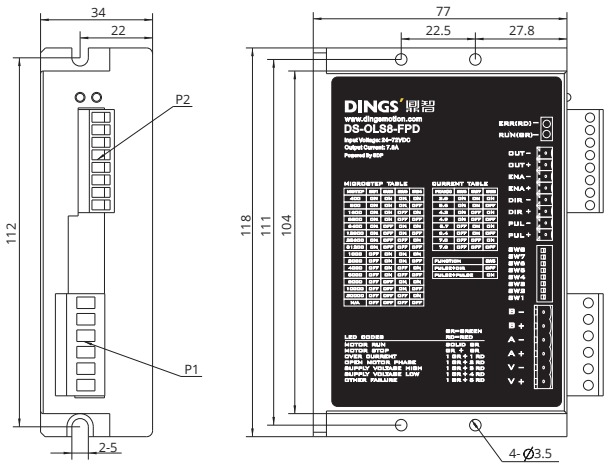

Standalone Stepper Motor Drivers

DS-OLF2-FPD Open-Loop Control - 5-phase Pulse type

Features

1. Input power : DC 24V - 36V
2. Output rated current: 0.2A - 2.4A (max.)
3. Compatible with 5-phase hybrid stepper motor
4. 4 inputs, 2 outputs
5. Supports 1 pulse, 2 pulse control
6. Microstepping drive (up to 125,000 pulses per revolution)

Specification

Applicable motor		5-phase hybrid stepper motor, max supported current : 2.4A (max.)
Power supply		24 - 36VDC
Output current		0.2A - 2.4A / phase (max.)
Driving method		Full-bridge bipolar PWM drive
Control method		Pulse-direction control
Encoder support		No
Input signal	Pulse signal	Opto-isolated input: H = 3.5–5V, L = 0–0.8V, input current 5–8mA
	Enable signal	
	Direction signal	
	Select signal	
Output signal	Alarm output	Opto-isolated output: max. voltage 30VDC, max. current 10mA
Size (excluding connector)		85 × 56 × 21 mm
Weight (excluding connector)		Approx. 96g
Operating environment	Environment	Avoid dust, oil mist and corrosive gas
	Humidity	< 85% RH, no condensation
	Temperature	0 ~ 40°C
	Cooling	Install in a ventilated environment

Installation (unit : mm)

1. Consider terminal size and cooling space during installation.
2. Recommended temperatures: under 60°C (driver), under 80°C (motor).
3. Install the driver vertically for natural cooling. Add a fan if needed to maintain stable operation.

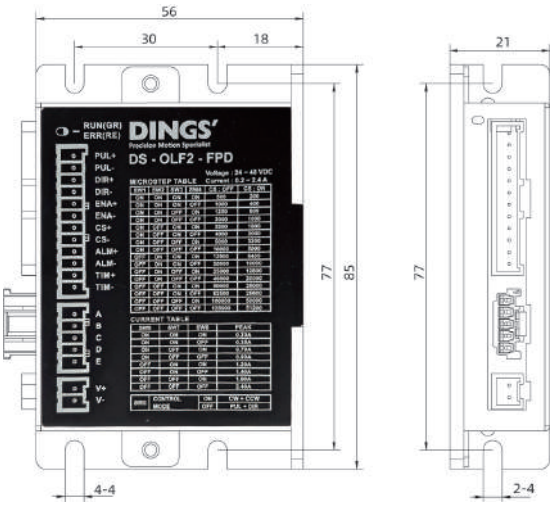

Standalone Stepper Motor Drivers

DS-OLS7-FRS4 Stand Alone Open Loop - RS485

Features

1. Input power : DC 24V - 48V
2. Constant current bipolar microstepping drive
3. Supports 1 pulse, 2 pulse control
4. Opto-isolated input
5. Motor short circuit protection
6. Compact design, low noise and low vibration
7. Drive current adjustable up to 3.2A (max.)
8. Support RS 485 communication

Specification

Applicable motor		2-phase hybrid stepper motor, max supported current : 3.2A (max.)
Power supply		24 - 48VDC
Output current		0.1A - 3.2A / phase (max.)
Driving method		Full-bridge bipolar PWM drive
Control method		Pulse-direction control / RS485 communication control
Encoder support		No
Input signal	IN1 (DIR) signal	Opto-isolated input: H = 3.5–26V, L = 0–0.8V, input current 6–15mA, max. response frequency 500kHz
	IN2 (STEP) signal	
Output signal	Alarm output	Opto-isolated output: max. voltage 30VDC, max. current 50mA
Size (excluding connector)		94 × 60 × 27 mm
Weight (excluding connector)		Approx. 175g
Operating environment	Environment	Avoid dust, oil mist and corrosive gas
	Humidity	< 85% RH, no condensation
	Temperature	0 ~ 40°C
	Cooling	Install in a ventilated environment

Installation (unit : mm)

1. Consider terminal size and cooling space during installation.
2. Recommended temperatures: under 60°C (driver), under 80°C (motor).
3. Install the driver vertically for natural cooling. Add a fan if needed to maintain stable operation.

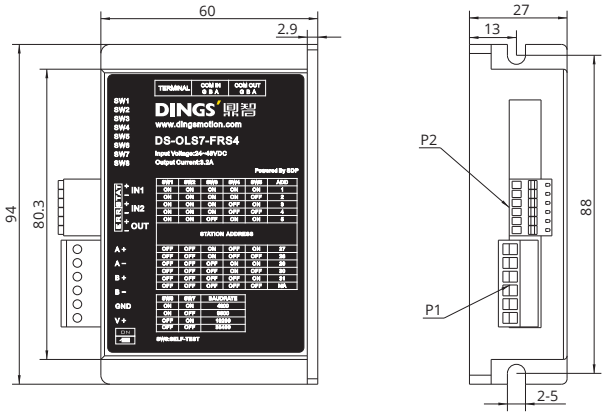

Standalone Stepper Motor Drivers

DS-OLS8-FRS4 Stand Alone Open Loop - RS485 type

Features

1. Input power : DC 24V - 72V
2. Constant current bipolar microstepping drive
3. Supports 1 pulse, 2 pulse control
4. Opto-isolated input
5. Motor short circuit protection
6. Compact design, low noise and low vibration
7. Drive current adjustable up to 6.5A (max.)
8. Support RS 485 communication

Specification

Applicable motor		2-phase hybrid stepper motor, max supported current : 6.5A (max.)
Power supply		24 - 72VDC
Output current		0.1A - 6.5A / phase (max.)
Driving method		Full-bridge bipolar PWM drive
Control method		Pulse-direction control / RS485 communication control
Encoder support		No
Input signal	Pulse signal	Opto-isolated input: H = 3.5–26V, L = 0–0.8V, input current 6–15mA, max. response frequency 500kHz
	Direction signal	
	Enable signal	
Output signal	Alarm output	Opto-isolated output: max. voltage 30VDC, max. current 50mA
Size (excluding connector)		118 × 78 × 34 mm
Weight (excluding connector)		Approx. 300g
Operating environment	Environment	Avoid dust, oil mist and corrosive gas
	Humidity	< 85% RH, no condensation
	Temperature	0 ~ 40°C
	Cooling	Install in a ventilated environment

Installation (unit : mm)

1. Consider terminal size and cooling space during installation.
2. Recommended temperatures: under 60°C (driver), under 80°C (motor).
3. Install the driver vertically for natural cooling. Add a fan if needed to maintain stable operation.

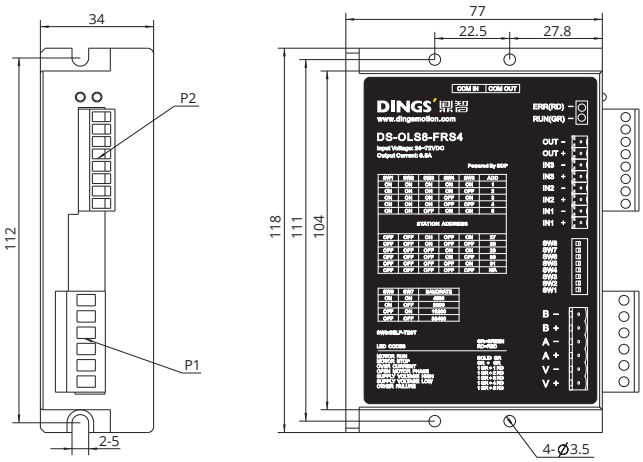

Standalone Stepper Motor Drivers

DS-CLS9-FRS4 Stand Alone Closed Loop - RS485 - Communication type

Features

1. Input power : DC 24V - 48V
2. Rated output current : 0.1–4.5A/phase (max.)
3. Supports pulse-direction and RS485 control (MODBUS-RTU)

Specification

Applicable motor		2-phase hybrid stepper motor, max supported current : 4.5A (max.)
Power supply		24 - 48VDC
Output current		0.1A - 4.5A / phase (max.)
Driving method		Full-bridge bipolar PWM drive
Control method		Pulse-direction control / RS485 communication control
Encoder support		Supports incremental encoder
Input signal	2 high-speed inputs	Opto-isolated input: H = 3.5–26V, L = 0–0.8V, 6–15mA, max. 200kHz
	5 general inputs	Opto-isolated input: H = 18–28V, L = 0–0.8V, input current 6–15mA
Output signal	4 general outputs	Opto-isolated output: max. voltage 30VDC, max. current 50mA
Size (excluding connector)		134 × 77 × 34 mm
Weight (excluding connector)		Approx. 350g
Operating environment	Environment	Avoid dust, oil mist and corrosive gas
	Humidity	< 85% RH, no condensation
	Temperature	0 ~ 40°C
	Cooling	Install in a ventilated environment

Installation (unit : mm)

1. Consider terminal size and cooling space during installation.
2. Recommended temperatures: under 60°C (driver), under 80°C (motor).
3. Install the driver vertically for natural cooling. Add a fan if needed to maintain stable operation.

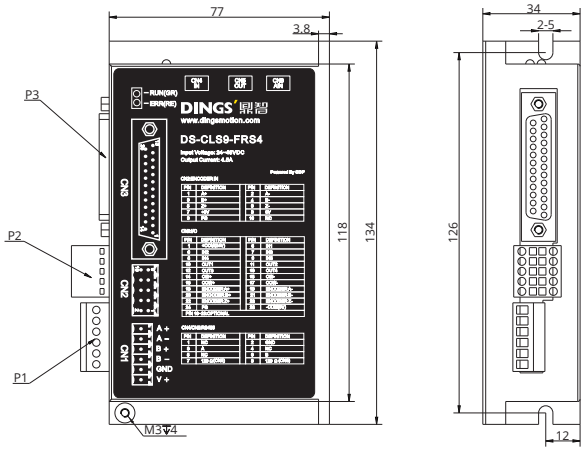

Standalone Stepper Motor Drivers

DS-CLS9-FRS4-01 Stand Alone Closed Loop - RS485 - Communication type

Features

1. Input power : DC 24V - 48V
2. Rated output current : 0.1–4.5A/phase (max.)
3. Supports pulse-direction and RS485 control (MODBUS-RTU)
4. Supports torque control and encoder signal output

Specification

Applicable motor		2-phase hybrid stepper motor, max supported current : 4.5A (max.)
Power supply		24 - 48VDC
Output current		0.1A - 4.5A / phase (max.)
Driving method		Full-bridge bipolar PWM drive
Control method		Pulse-direction control / RS485 communication control
Encoder support		Supports incremental encoder
Input signal	2 high-speed inputs	Opto-isolated input: H = 3.5–26V, L = 0–0.8V, 6–15mA, max. 200kHz
	5 general inputs	Opto-isolated input: H = 18–28V, L = 0–0.8V, input current 6–15mA
Output signal	4 general outputs	Opto-isolated output: max. voltage 30VDC, max. current 50mA
Size (excluding connector)		134 × 77 × 34 mm
Weight (excluding connector)		Approx. 350g
Operating environment	Environment	Avoid dust, oil mist and corrosive gas
	Humidity	< 85% RH, no condensation
	Temperature	0 ~ 40°C
	Cooling	Install in a ventilated environment

Installation (unit : mm)

1. Consider terminal size and cooling space during installation.
2. Recommended temperatures: under 60°C (driver), under 80°C (motor).
3. Install the driver vertically for natural cooling. Add a fan if needed to maintain stable operation.

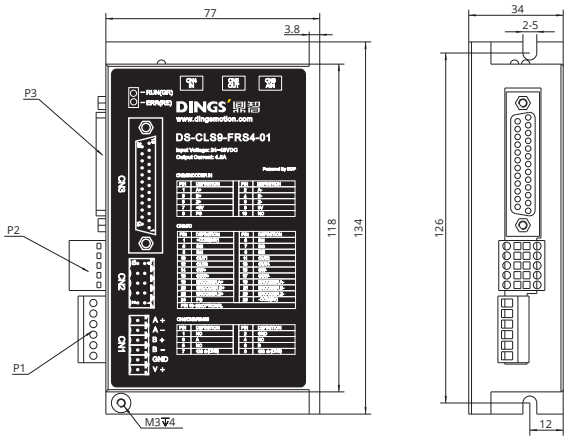

Standalone Stepper Motor Drivers

DS-CLS10-FRS4 Stand Alone Closed Loop Control - RS485 type

Features

1. Input power : DC 24V - 72V
2. Rated output current : 0.4–6.0A/phase (max.)
3. Constant current bipolar microstepping drive
4. 2 high-speed inputs, 5 general digital inputs, 4 configurable digital outputs
5. RS485 interface with MODBUS-RTU support, up to 30 nodes
6. Selectable command mode (PULSE / RS-485 communication)

Specification

Applicable motor		2-phase hybrid stepper motor, max supported current : 6.0A (max.)
Power supply		24 - 72VDC
Output current		0.4A - 6.0A / phase (max.)
Driving method		Full-bridge bipolar PWM drive
Control method		Pulse-direction control / RS485 communication control
Encoder support		Supports incremental encoder
Input signal	2 high-speed inputs	Opto-isolated input: H = 3.5–26V, L = 0–0.8V, 6–15mA, max. 200kHz
	5 general inputs	Opto-isolated input: H = 18–28V, L = 0–0.8V, input current 6–15mA
Output signal	3 general outputs	Opto-isolated output: max. voltage 30VDC, max. current 50mA
Size (excluding connector)		156 × 97 × 33.5 mm
Weight (excluding connector)		Approx. 376g
Operating environment	Environment	Avoid dust, oil mist and corrosive gas
	Humidity	< 85% RH, no condensation
	Temperature	0 ~ 40°C
	Cooling	Install in a ventilated environment

Installation (unit : mm)

1. Consider terminal size and cooling space during installation.
2. Recommended temperatures: under 60°C (driver), under 80°C (motor).
3. Install the driver vertically for natural cooling. Add a fan if needed to maintain stable operation.

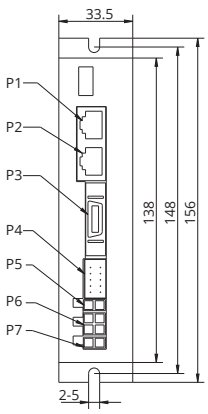

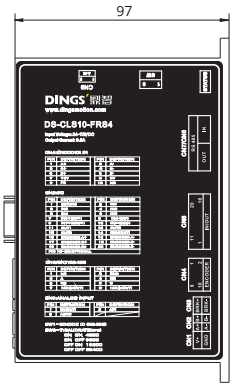

Standalone Stepper Motor Drivers

DS-CLS10-FRS4-1A Stand Alone Closed Loop Control - RS485 type

Features

1. Input power : DC 24V - 72V
2. Rated output current : 6.5A/phase (max.)
3. Closed-loop 2-phase stepper motor drive with RS-485 command control
4. MODBUS-RTU protocol, supports up to 30-axis control
5. Supports ABS encoder (BiSS-C type, 16-bit single-turn / 16-bit multi-turn)
6. Various parameter settings via DINGS' Tuner Pro GUI
7. Selectable command mode (PULSE / RS-485 communication)

Specification

Applicable motor		2-phase hybrid stepper motor, max supported current : 6.5A (max.)
Power supply		24 - 72VDC
Output current		6.5A / phase (max.)
Driving method		Full-bridge bipolar PWM drive
Control method		Pulse-direction control / RS485 communication control
Encoder support		Supports ABS encoder (BiSS-C type, 16-bit single-turn / 16-bit multi-turn)
Input signal	2 high-speed inputs	Opto-isolated input: H = 3.5–26V, L = 0–0.8V, 6–15mA, max. 200kHz
	5 general inputs	Opto-isolated input: H = 18–28V, L = 0–0.8V, input current 6–15mA
Output signal	3 general outputs	Opto-isolated output: max. voltage 30VDC, max. current 50mA
Size (excluding connector)		156 × 97 × 33.5 mm
Weight (excluding connector)		Approx. 500g
Operating environment	Environment	Avoid dust, oil mist and corrosive gas
	Humidity	< 85% RH, no condensation
	Temperature	0 ~ 40°C
	Cooling	Install in a ventilated environment

Installation (unit : mm)

1. Consider terminal size and cooling space during installation.
2. Recommended temperatures: under 60°C (driver), under 80°C (motor).
3. Install the driver vertically for natural cooling. Add a fan if needed to maintain stable operation.

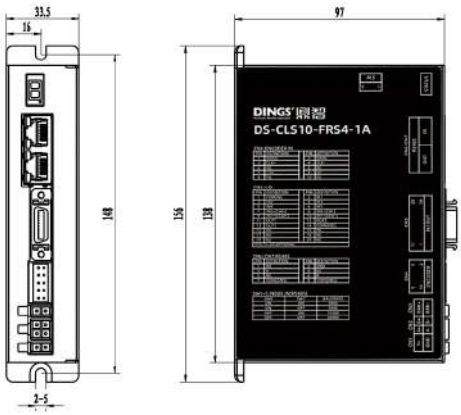

Standalone Stepper Motor Drivers

DS-CLF4-FRS4 Stand Alone Closed Loop Control

Features

1. Input power : DC 24V - 36V
2. Max. output phase current (peak) : 4.0A
3. Supports MODBUS-RTU protocol (RS485 communication, up to 32 nodes)
4. Supports high-speed pulse input, motion control functions and multiple digital I/O
5. 2-channel high-speed pulse input signals: opto-isolated, configurable as pulse/direction signals
6. 5-channel input signals: opto-isolated, DC 5V input
7. 3-channel opto-isolated output signals: configurable port functions
8. Smooth and precise current control with reduced motor heat generation
9. Built-in protections: motor short circuit, overcurrent, overvoltage, undervoltage, overheating

Specification

Applicable motor		2-phase open/closed-loop incremental stepper motors 3-phase open-loop stepper motors 5-phase open/closed-loop stepper motors
Power supply		24 - 36V DC
Output current		0.3A - 4A (Phase)
Overvoltage Protection		45V DC
Undervoltage Protection		15V DC
Input · Output signal	2 high-speed pulse input signals	Opto-isolated, input 3.5–5V, current 5–8mA
	5 input signals	Opto-isolated, max 30VDC, max sink current 10mA
	3 output signals	
Size (excluding connector)		92.5 × 21 × 56 mm
Weight (excluding connector)		175g
Operating environment	Environment	Avoid dust, oil mist and corrosive gas
	Humidity	< 85% RH, no condensation
	Temperature	Operating : 0 ~ 40°C / Storage : -10 ~ 70°C
	Cooling	Install in a ventilated environment

Installation (unit : mm)

1. Consider terminal size and cooling space during installation.
2. Recommended temperatures: under 60°C (driver), under 80°C (motor).
3. Install the driver vertically for natural cooling. Add a fan if needed to maintain stable operation.

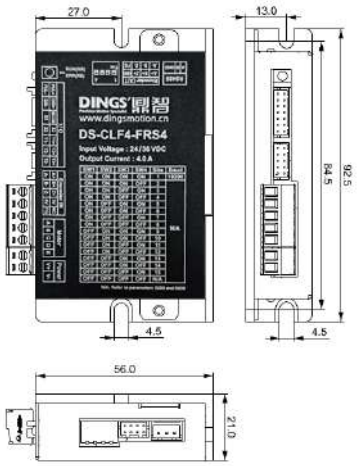

Standalone Stepper Motor Drivers

DS-CLS3-FETC-4I Stand Alone Closed Loop - EtherCAT type

Features

1. Input power : DC 24V - 36V
2. Rated output current : 0.4–3.0A/phase (max.)
3. Constant current bipolar microstepping drive
4. Supports EtherCAT communication and control modes: PP / PV / PT / HM / CSP / CSV
5. Opto-isolated input
6. Motor short-circuit, undervoltage, overvoltage, and overcurrent protection
7. Supports control of up to 4 axes

Specification

Applicable motor		2-phase/3-phase/5-phase hybrid stepper motors, max supported current : 3.0A (max.)
Power supply		24 - 36VDC
Output current		0.4A - 3.0A / phase (max.)
Driving method		Full-bridge bipolar PWM drive
Control method		EtherCAT communication control
Encoder support		Supports incremental encoder
Input signal	1×4 high-speed input	Opto-isolated input: H = 24V, L = 0–0.8V, input current 5–8mA, max. 100kHz
	3×4 general inputs	Opto-isolated input: H = 24V, L = 0–0.8V, input current 5–8mA, max. 1kHz
Output signal	2×4 general outputs	Opto-isolated output: max. voltage 30VDC, max. current 50mA
Size (excluding connector)		144 × 106 × 31 mm
Weight (excluding connector)		Approx. 450g
Operating environment	Environment	Avoid dust, oil mist and corrosive gas
	Humidity	< 85% RH, no condensation
	Temperature	0 ~ 40°C
	Cooling	Install in a ventilated environment

Installation (unit : mm)

1. Consider terminal size and cooling space during installation.
2. Recommended temperatures: under 60°C (driver), under 80°C (motor).
3. Install the driver vertically for natural cooling. Add a fan if needed to maintain stable operation.

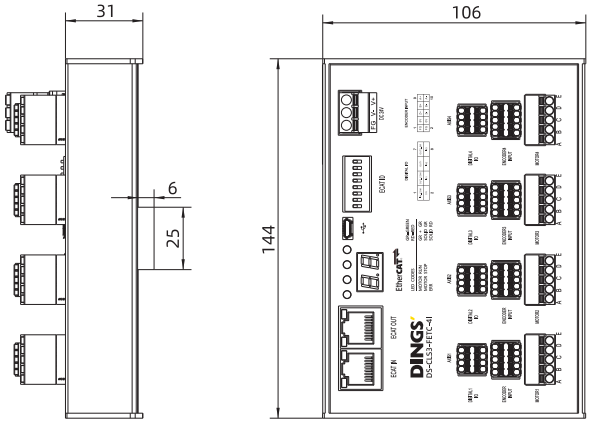

Standalone Stepper Motor Drivers

DS-CLS9-FETC Stand Alone Closed Loop - EtherCAT type

Features

1. Input power : DC 24V - 48V
2. Max. output current : 6.5A (max.)
3. Constant current bipolar microstepping drive
4. Supports EtherCAT communication and control modes: PP, PV, HM, CSP, CSV
5. Opto-isolated input
6. Motor short-circuit, undervoltage, overvoltage, and overcurrent protection
7. Compact design, low noise and low vibration

Specification

Applicable motor		2-phase hybrid stepper motor, max supported current : 6.5A (max.)
Power supply		24 - 48VDC
Output current		0.1A - 6.5A / phase (max.)
Driving method		Full-bridge bipolar PWM drive
Control method		EtherCAT communication control
Encoder support		Supports incremental encoder
Input signal	2 high-speed inputs	Opto-isolated input: H = 3.5–26V, L = 0–0.8V, 6–15mA, max. 500kHz
	5 general inputs	Opto-isolated input: H = 18–28V, L = 0–0.8V, input current 6–15mA
Output signal	3 general outputs	Opto-isolated output: max. voltage 30VDC, max. current 50mA
	1 brake output	Opto-isolated output: max. voltage 30VDC, max. current 500mA
Size (excluding connector)		156 × 97 × 33.5 mm
Weight (excluding connector)		Approx. 500g
Operating environment	Environment	Avoid dust, oil mist and corrosive gas
	Humidity	< 85% RH, no condensation
	Temperature	0 ~ 40°C
	Cooling	Install in a ventilated environment

Installation (unit : mm)

1. Consider terminal size and cooling space during installation.
2. Recommended temperatures: under 60°C (driver), under 80°C (motor).
3. Install the driver vertically for natural cooling. Add a fan if needed to maintain stable operation.

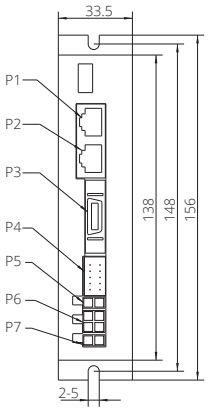

Standalone Stepper Motor Drivers

DS-CLS9-FETC-1A Standalone Closed Loop - EtherCAT

Features

1. Input power: 24–48VDC
2. Maximum output phase current (peak): 6.5A
3. Full-bridge bipolar PWM drive
4. EtherCAT communication control supporting PP / PV / HM / CSP / CSV modes
5. ABS encoder with BiSS-C communication
6. No homing required with ABS encoder
7. Motor short-circuit, undervoltage, overvoltage and overcurrent protection
8. Built-in STO (Safe Torque Off) function

Specification

Applicable motor		2-phase hybrid stepper motor with ABS encoder
Power supply		24 - 48VDC
Output current		0.4A - 6.5A / phase (Peak)
Driving method		Full-bridge bipolar PWM drive
Control method		EtherCAT communication control
Encoder support		ABS encoder (BiSS-C communication)
Input signal	1 touch-probe input	Opto-isolated input: 18–24VDC, input current 5–8mA, max. response frequency 100kHz
	3 general inputs	Opto-isolated input: 18–24VDC, input current 5–8mA, max. response frequency 1kHz
Output signal	1 general outputs	Opto-isolated output: max. voltage 30VDC, max. current 50mA
	1 brake output	Opto-isolated output: max. voltage 30VDC, max. current 50mA
Size (excluding connector)		134 × 77 × 34mm
Weight (excluding connector)		Approx. 311g
Operating environment	Environment	Avoid dust, oil mist and corrosive gas
	Humidity	< 85% RH, no condensation
	Temperature	0 ~ 40°C
	Cooling	Install in a ventilated environment

Installation (unit : mm)

1. Consider terminal size and cooling space during installation.
2. Recommended temperatures: under 60°C (driver), under 80°C (motor).
3. Install the driver vertically for natural cooling. Add a fan if needed to maintain stable operation.

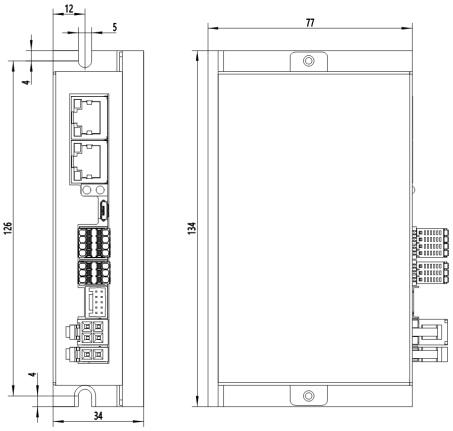

Standalone Stepper Motor Drivers

DS-CLS9-FETC-2I/2A Stand ALone Closed Loop - EtherCAT type

Features

1. Input power : DC 24V - 48V
2. Rated output current : 0.4–6.5A/phase (max.)
3. Supports EtherCAT communication and control modes: PP / PV / HM / CSP / CSV
4. Opto-isolated input
5. Motor short-circuit, undervoltage, overvoltage, and overcurrent protection
6. Supports control of up to 2 axes
7. Supports ABS encoder (BiSS-C type, 16-bit single-turn / 16-bit multi-turn)

Specification

Drive model		DS-CLS9-FETC-2I	DS-CLS9-FETC-2A
Applicable motor		2-phase hybrid stepper motor, max supported current : 6.5A (max.)	
Power supply		24 - 48VDC	
Output current		0.4A - 6.5A / phase (max.)	
Driving method		Full-bridge bipolar PWM drive	
Control method		EtherCAT communication control	
Encoder support		Supports INC encoder	Supports ABS encoder (BiSS-C type, 16-bit single-turn / 16-bit multi-turn)
Input signal	1×2 high-speed input	Opto-isolated input: H = 24V, L = 0–0.8V, input current 5–8mA, max. 100kHz	
	3×2 general inputs	Opto-isolated input: H = 24V, L = 0–0.8V, input current 5–8mA, max. 1kHz	
Output signal	2×2 general outputs	Opto-isolated output: max. voltage 30VDC, max. current 50mA	
	1×2 brake output	Opto-isolated output: max. voltage 30VDC, max. current 500mA	
Size (excluding connector)		156 × 97 × 34 mm	
Weight (excluding connector)		Approx. 500g	
Operating environment	Environment	Avoid dust, oil mist and corrosive gas	
	Humidity	< 85% RH, no condensation	
	Temperature	0 ~ 40°C	
	Cooling	Install in a ventilated environment	

Installation (unit : mm)

1. Consider terminal size and cooling space during installation.
2. Recommended temperatures: under 60°C (driver), under 80°C (motor).
3. Install the driver vertically for natural cooling. Add a fan if needed to maintain stable operation.

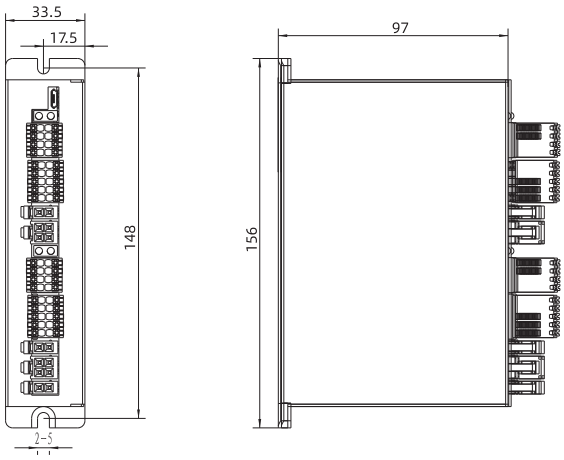

Standalone Stepper Motor Drivers

DS-CLS9-FCAO Stand Alone Closed Loop - CANopen type

Features

1. Input power : DC 24V - 48V
2. Constant current bipolar microstepping drive
3. Supports CANopen communication and control modes: PP / PV / HM
4. Opto-isolated input
5. Motor short-circuit, undervoltage, overvoltage, and overcurrent protection
6. Compact design, low noise and low vibration

Specification

Applicable motor		2-phase hybrid stepper motor, max supported current : 6.5A (max.)
Power supply		24 - 48VDC
Output current		0.1A - 6.5A / phase (max.)
Driving method		Full-bridge bipolar PWM drive
Control method		CANopen communication control
Encoder support		Supports incremental encoder
Input signal	2 high-speed inputs	Opto-isolated input: H = 3.5–26V, L = 0–0.8V, 5–8mA, max. 500kHz
	5 general inputs	Opto-isolated input: H = 24V, L = 0–0.8V, input current 5–8mA
Output signal	3 general outputs	Opto-isolated output: max. voltage 30VDC, max. current 50mA
	1 brake output	Opto-isolated output: max. voltage 30VDC, max. current 500mA
Size (excluding connector)		156 × 97 × 33.5 mm
Weight (excluding connector)		Approx. 500g
Operating environment	Environment	Avoid dust, oil mist and corrosive gas
	Humidity	< 85% RH, no condensation
	Temperature	0 ~ 40°C
	Cooling	Install in a ventilated environment

Installation (unit : mm)

1. Consider terminal size and cooling space during installation.
2. Recommended temperatures: under 60°C (driver), under 80°C (motor).
3. Install the driver vertically for natural cooling. Add a fan if needed to maintain stable operation.

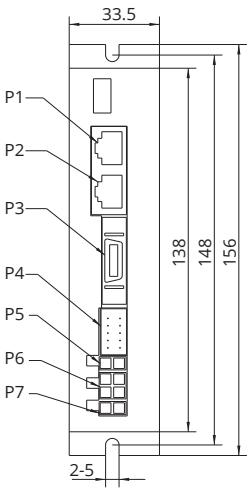

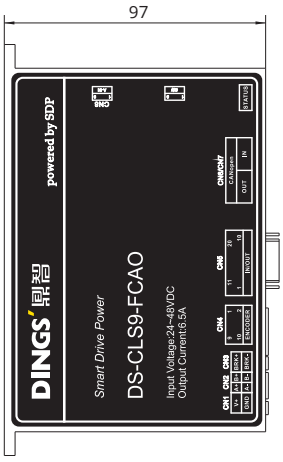

Standalone Stepper Motor Drivers

DS-OLS10-FSC Stand Alone Open Loop - Speed regulator

Features

1. Input power : DC 24V - 48V
2. Control mode: Constant speed, analog variable speed
3. Opto-isolated input: Compatible with 5–24VDC
4. Motor short circuit protection
5. Compact design, low noise and low vibration

Specification

Applicable motor		2-phase hybrid stepper motor, max supported current : 4.5A (max.)
Power supply		24 - 48VDC
Output current		1.0A - 4.5A / phase (max.)
Driving method		Full-bridge bipolar PWM drive
Control method		Analog speed control
Encoder support		No
Input signal	IN 1 (Start)	Opto-isolated input: H = 3.5–26V, L = 0–0.8V, 6–15mA
	IN 2 (Direction)	
	IN 1 (Speed switch)	
Analog input signal		10KΩ potentiometer or 0–10 VDC analog signal
Size (excluding connector)		118 × 78 × 34 mm
Weight (excluding connector)		Approx. 300g
Operating environment	Environment	Avoid dust, oil mist and corrosive gas
	Humidity	< 85% RH, no condensation
	Temperature	0 ~ 40°C
	Cooling	Install in a ventilated environment

Installation (unit : mm)

1. Consider terminal size and cooling space during installation.
2. Recommended temperatures: under 60°C (driver), under 80°C (motor).
3. Install the driver vertically for natural cooling. Add a fan if needed to maintain stable operation.

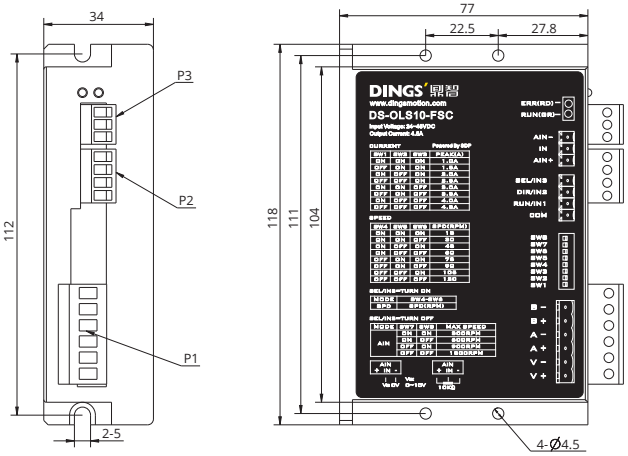

BLDC · VCM Control Drivers

DS-OLBD1-FRS4

Features

1. Input power : DC12V - 48V
2. Output current : Rated 6A, Peak 18A
3. Motor type supported: Brushless DC motor (BLDC)
4. 3 inputs, 2 outputs
5. Supports RS485 protocol

Specification

Applicable motor		Brushless DC
Power supply		12 - 48VDC
Output current		6A (rated), 18A (peak)
Driving method		3-phase PWM drive
Control method		Analog speed control, RS485
Sensing method		Digital hall sensor
Input signal	FR (Forward/Reverse)	Single-ended input type
	EN (Enable)	
	BK (Brake)	
Output signal	PG (Speed out)	OC Gate Output, Max. Current: 10 mA
	ALM (Alarm)	
Analog Input signal		10KΩ potentiometer or 0–5 VDC analog signal
Size (excluding connector)		118 × 75.5 × 25.5 mm
Weight (excluding connector)		Approx. 200g
Operating environment	Environment	Avoid dust, oil mist and corrosive gas
	Humidity	< 85% RH, no condensation
	Temperature	-15 ~ 50°C
	Cooling	Install in a ventilated environment

Installation (unit : mm)

1. Consider terminal size and cooling space during installation.
2. Recommended temperatures: under 60°C (driver), under 80°C (motor).
3. Install the driver vertically for natural cooling. Add a fan if needed to maintain stable operation.

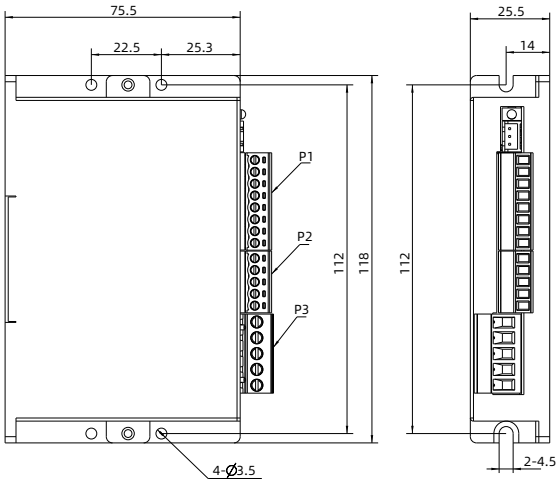

BLDC · VCM Control Drivers

DS-OLBD3-FRS4

Features

1. Input power : DC 12V - 48V
2. Output current : Rated 10A, Peak 30A
3. Motor types supported: Brushless DC motor (BLDC)
4. 3 inputs, 2 outputs
5. Supports RS485 protocol

Specification

Applicable motor		Brushless DC
Power supply		12 - 48VDC
Output current		10A (rated), 30A (peak)
Driving method		3-phase PWM drive
Control method		Analog speed control, RS485
Sensing method		Digital hall sensor
Input signal	FR (Forward/Reverse)	Single-ended input type
	EN (Enable)	
	BK (Brake)	
Output signal	PG (Speed out)	OC Gate Output, Max. Current: 10 mA
	ALM (Alarm)	
Analog Input signal		10KΩ potentiometer or 0–5 VDC analog signal
Size (excluding connector)		118 × 77 × 34 mm
Weight (excluding connector)		Approx. 300g
Operating environment	Environment	Avoid dust, oil mist and corrosive gas
	Humidity	< 85% RH, no condensation
	Temperature	-15 ~ 50°C
	Cooling	Install in a ventilated environment

Installation (unit : mm)

1. Consider terminal size and cooling space during installation.
2. Recommended temperatures: under 60°C (driver), under 80°C (motor).
3. Install the driver vertically for natural cooling. Add a fan if needed to maintain stable operation.

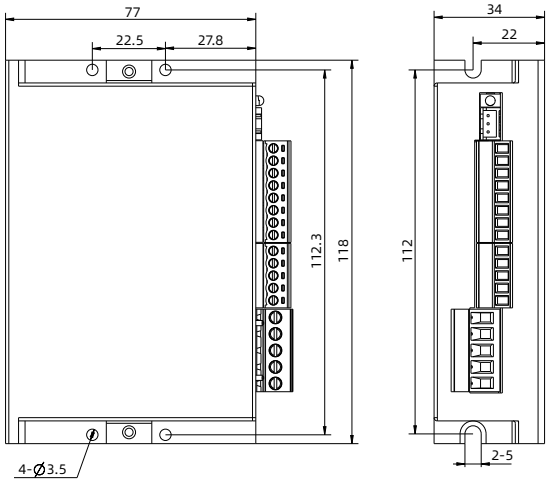

BLDC · VCM Control Drivers

DS-OLBV1-FRS4

Features

1. Input power : DC 18V - 52V (24V/48V recommended)
2. Output current : Continuous 6A, Peak 18A
3. Motor types supported : Voice Coil Motor (VCM)
4. 3 inputs, 2 outputs
5. Supports RS-485 communication and 0-5V analog frequency control

Specification

Applicable motor		Voice Coil Motor (VCM)
Power supply		18 - 52VDC (24V/48V Recommended)
Output current		6A (Continuous), 18A (Peak, ≤2s)
Driving method		Frequency control
Control method		RS-485, Analog frequency input
Frequency Setting Range		0.1 ~ 500Hz (Up to 3000Hz Configurable)
Input signal	IN1 (General Input)	Single-ended input type
	EN (Enable Input)	
	IN3 (General Input)	
Output signal	OUT1 (General Output)	Open-Collector Output, Max. Voltage: 30VDC, Max. Current: 10mA
	ALM (Alarm Output)	
Analog Input signal		0–5VDC Frequency Command Input (SV)
Size (excluding connector)		118 × 75.5 × 25.5 mm
Weight (excluding connector)		Approx. 300g
Operating environment	Environment	Avoid dust, oil mist and corrosive gas
	Humidity	< 85% RH, no condensation
	Temperature	-15 ~ 50°C
	Cooling	Install in a ventilated environment

Installation (unit : mm)

1. Consider terminal size and cooling space during installation.
2. Recommended temperatures: under 60°C (driver), under 80°C (motor).
3. Install the driver vertically for natural cooling. Add a fan if needed to maintain stable operation.

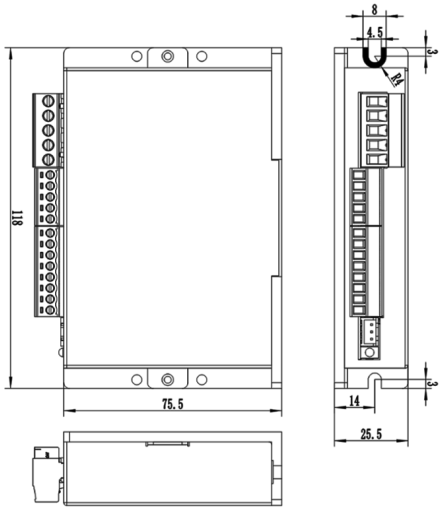

BLDC · VCM Control Drivers

DS-CLBV1-FRS4

Features

1. Input power : DC 24V - 48V
2. Output current : 0.4A ~ 4.5A / Phase
3. Motor types supported : Voice Coil Motor (VCM)
4. 7 inputs, 4 outputs
5. Supports RS-485 communication and Pulse/Direction control
6. Supports closed-loop position control
7. Supports Hall sensor analog feedback input

Specification

Applicable motor		Voice Coil Motor (VCM)
Power supply		24 - 48VDC
Output current		0.4A ~ 4.5A
Driving method		Position / Speed control
Control method		RS-485, Pulse/Direction, Dual pulse
Sensing method		Analog position sensor
Input signal	IN1 ~ IN5 (General Inputs)	Opto-isolated Inputs
	CP (Pulse Input)	
	DR (Direction Input)	
Output signal	OUT1~OUT4 (General Output)	Opto-isolated Outputs, Max. Voltage: 30VDC, Max. Current: 50mA
	ALM (Alarm Output)	
Analog Input signal		0–5VDC Analog Position Sensor Feedback Input (AIN)
Size (excluding connector)		134 × 77 × 34 mm
Weight (excluding connector)		Approx. 325g
Operating environment	Environment	Avoid dust, oil mist and corrosive gas
	Humidity	< 85% RH, no condensation
	Temperature	0 ~ 40°C
	Cooling	Install in a ventilated environment

Installation (unit : mm)

1. Consider terminal size and cooling space during installation.
2. Recommended temperatures: under 60°C (driver), under 80°C (motor).
3. Install the driver vertically for natural cooling. Add a fan if needed to maintain stable operation.

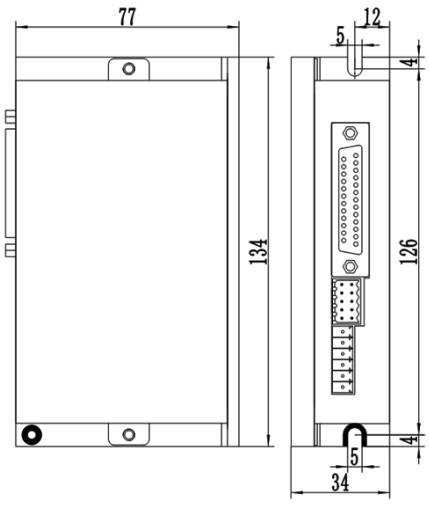

Integrated Stepper Motor Drivers

DS-OL42-(ICAO/IPD/IRS4) Integrated Open Loop

Features

1. Input power : DC24V - 36V
2. Rated output current : 0.5–3.0A/phase (max.)
3. IPD(IRS4) : Pulse, RS485 control, support MODBUS-RTU communication protocol
   ICAO : Support CANopen communication protocol, Support control mode PP / PV / HM
4. Through-hole integrated driver compatible with DINGS' NEMA Size 17 stepper motors (shaft diameter < 11mm)

Specification

Drive model		DS-OL42-ICAO	DS-OL42-IRS4 (IPD)
Applicable motor		2-phase hybrid stepper motor, max supported current : 3.0A (max.)	
Power supply		24 - 36VDC	
Output current		0.5A - 3.0A / phase (max.)	
Driving method		Full-bridge bipolar PWM drive	
Control method		CANopen	RS485 / Pulse-direction
Encoder support		No	
Input signal		**4 general inputs** Opto-isolated input: H = 5V, L = 0–0.8V, 6–15mA	**2 high-speed inputs** Opto-isolated input: H = 3.5–26V, L = 0–0.8V, 5–8mA, max. 200kHz **2 general inputs** Opto-isolated input: H = 5V, L = 0–0.8V, 5–8mA
Output signal	1 general outputs	Opto-isolated output: max. voltage 30VDC, max. current 10mA	
Size (excluding connector)		42.2 × 42.2 × 25.2 mm	
Weight (excluding connector)		Approx. 60g	
Operating environment	Environment	Avoid dust, oil mist and corrosive gas	
	Humidity	< 85% RH, no condensation	
	Temperature	0 ~ 40°C	
	Cooling	Install in a ventilated environment	

Installation (unit : mm)

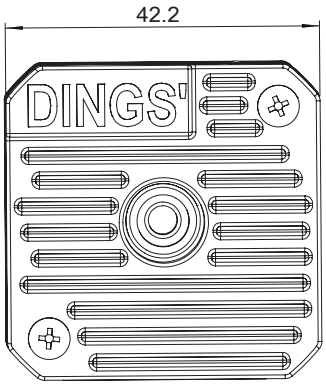

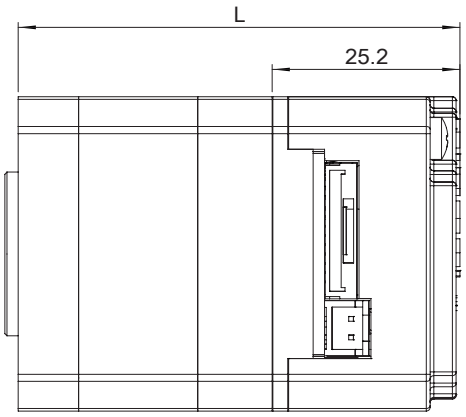

Integrated Stepper Motor Drivers

DS-OL57-(ICAO/IRS4/ISC) Integrated Open Loop

Features

1. Input power : DC 24V - 48V
2. Rated output current : 0.5–5.6A/phase (max.)
3. Multiple control modes supported: Pulse, MODBUS-RTU communication, I/O control, internal programming, CAN bus, analog control
4. Through-hole integrated driver compatible with DINGS' NEMA Size 23 stepper motors (shaft diameter < 16mm)
5. Undervoltage, overvoltage, and overcurrent protection

Specification

Drive model		DS-OL57-ICAO	DS-OL57-IRS4 (IPD)	DS-OL57-ISC
Applicable motor		2-phase hybrid stepper motor, max supported current : 5.6A (max.)		
Power supply		24 - 48VDC		
Output current		0.5A - 5.6A / phase (max.)		
Driving method		Full-bridge bipolar PWM drive		
Control method		CANopen	RS485 / Pulse-direction	Analog speed command
Encoder support		No		
Input signal		**4 general inputs** Opto-isolated input: H = 3.5–5V, L = 0–0.8V, 5–8mA	**2 high-speed inputs** H = 3.5–26V, L = 0–0.8V, 5–8mA	**3 high-speed inputs** H = 3.5–5V, L = 0–0.8V, 5–8mA, Max. 200kHz
			2 general inputs H = 3.5–5V, L = 0–0.8V, 5–8mA	**Analog input** Connected to 10K potentiometer or 0~5V analog
Output signal	1 general output	Opto-isolated output: max. voltage 30VDC, max. current 10mA		
Size (excluding connector)		56.2 × 56.2 × 25.4 mm		
Weight (excluding connector)		Approx. 60g		
Operating environment	Environment	Avoid dust, oil mist and corrosive gas		
	Humidity	< 85% RH, no condensation		
	Temperature	0 ~ 40°C		
	Cooling	Install in a ventilated environment		

Installation (unit : mm)

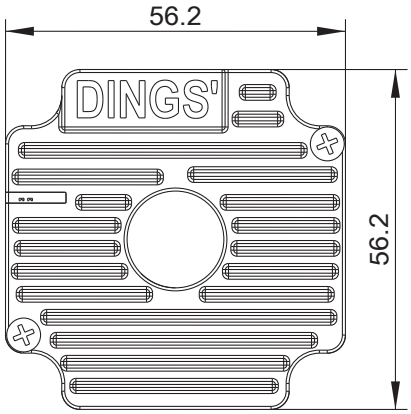

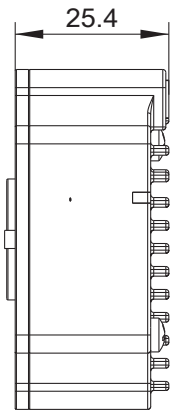

Integrated Stepper Motor Drivers

DS-CL28-SA Integrated Closed Loop - RS485

Features

1. Input power : DC 24V ± 10%
2. Rated output current : 0–1.0A/phase (max.)
3. Integrated 28 step closed-loop control system, RS485 communication interface supports MODBUS-RTU communication protocol
4. 3 inputs and 1 output

Specification

Applicable motor		2-phase hybrid stepper motor, max supported current : 1.0A (max.)
Power supply		24VDC ± 10 %
Output current		0.1A - 1.0A / phase (max.)
Driving method		Full-bridge bipolar PWM drive
Control method		RS485 communication control
Encoder support		Built-in INC encoder
Input signal	4 general inputs	Opto-isolated input : 24VDC
Operating environment	Environment	Avoid dust, oil mist and corrosive gas
	Humidity	< 85% RH, no condensation
	Temperature	0 ~ 40°C
	Cooling	Install in a ventilated environment

Installation (unit : mm)

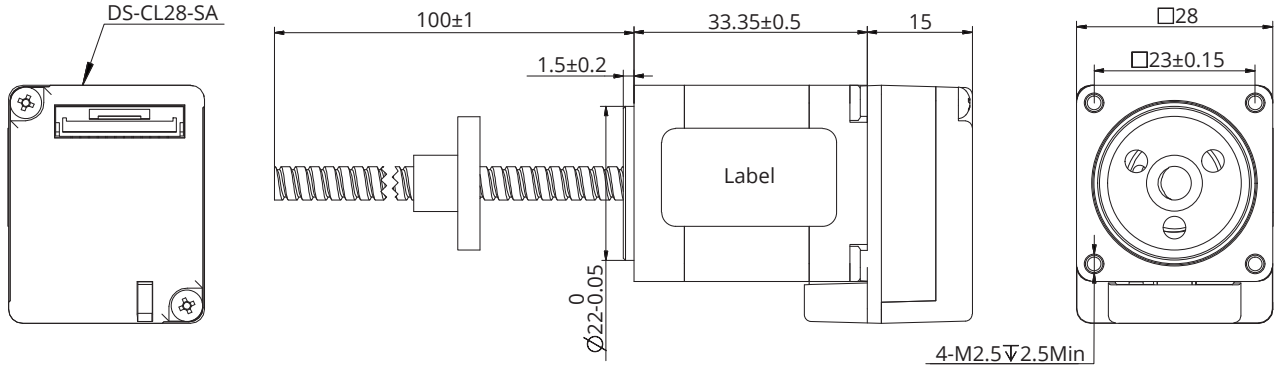

Integrated Stepper Motor Drivers

DS-CL28-IRS4(IPD) Integrated Open / Closed Loop

Features

1. Max. frequency response: 500KHz (duty cycle 50%)
2. Supports pulse mode, internal pulse mode, I/O control, position pressing mode, and torque mode
3. 3 Input signals : pulse, direction, enable (optocoupler isolation, 5V signal drive, current limiting resistor required for exceeding 5V)
4. 1 output signal : alarm (optocoupler isolation, output when there is no alarm)
5. Protection functions : overcurrent, overvoltage, undervoltage, motor phase loss

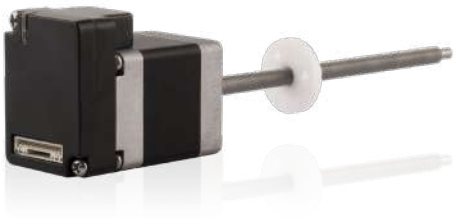

Specification

Applicable motor		2-phase hybrid stepper motor, max supported current : 1.5A (max.)
Power supply		24VDC
Output current		0.5A - 1.5A / phase (max.)
Driving method		Full-bridge bipolar PWM drive
Control method		RS485 communication control
Encoder support		Built-in INC encoder
Input signal	3 high-speed inputs	Opto-isolated input: H = 3.5–5V, L = 0–0.8V, 6–15mA, max. 500kHz
Output signal	Alarm output	Opto-isolated output: max. voltage 30VDC, max. current 10mA
Operating environment	Environment	Avoid dust, oil mist and corrosive gas
	Humidity	< 85% RH, no condensation
	Temperature	0 ~ 40°C
	Cooling	Install in a ventilated environment

Installation (unit : mm)

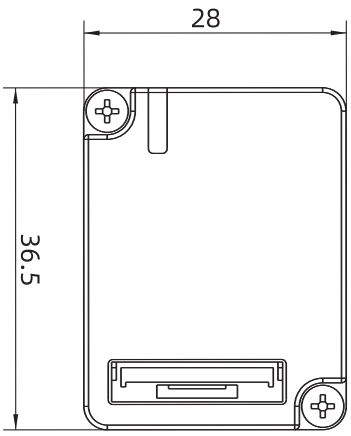

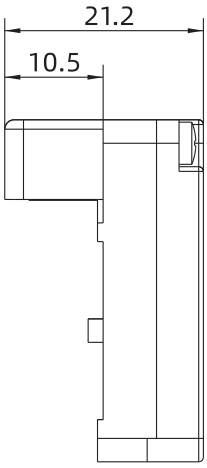

Integrated Stepper Motor Drivers

DS-CL42-SA Integrated Closed Loop - RS485

Features

1. Input power : DC 24V ± 10%
2. Rated output current : 0–1.2A/phase (max.)
3. Integrated 42 step closed-loop control system, RS485 communication interface supports MODBUS-RTU communication protocol
4. 7 inputs and 3 outputs

Specification

Applicable motor		2-phase hybrid stepper motor, max supported current : 1.2A (max.)
Power supply		24VDC ± 10 %
Output current		0.1A - 1.2A / phase (max.)
Driving method		Full-bridge bipolar PWM drive
Control method		RS485 communication control
Encoder support		Built-in INC encoder
Input signal	7 general inputs	Opto-isolated input : 24VDC
Output signal	3 general outputs	Opto-isolated output : 24VDC
	1 brake output	24VDC
Operating environment	Environment	Avoid dust, oil mist and corrosive gas
	Humidity	< 85% RH, no condensation
	Temperature	0 ~ 40°C
	Cooling	Install in a ventilated environment

Installation (unit : mm)

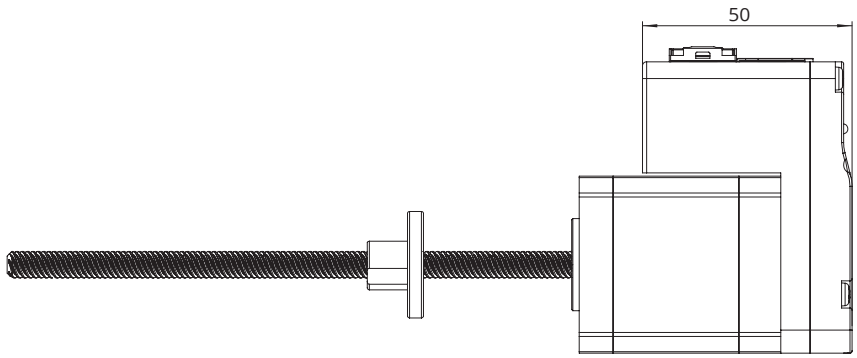

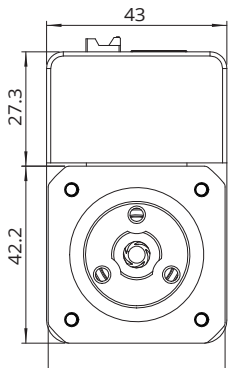

Coreless Push Rod Actuator

- **Features**

1. Lightweight design based on a coreless motor, featuring low inertia and fast response, enabling millisecond-level rapid start, braking, and reversal.
2. Smooth operation even at low speeds, without vibration or stalling, suitable for precision motion control.
3. Integrated high-precision lead screw and closed-loop control system to meet precise positioning requirements.
4. High power density design effectively balances compact size and high thrust, with a maximum thrust of up to 1500 N.

- **Specification**

Item	Unit	Ø8*	Ø10	Ø12	Ø16	Ø22
Rated voltage	V	12	12	12	12	24
Rated current	A	0.085	0.8	0.65	2.6	1.1
Rated thrust	N	25	80	85	200	750
Standard stroke (Customizable)	mm	15	20–30	30–40	30–40	40–50
Max speed	mm/s	3.58	28	14	20	5
Repeatability	mm	±0.08	±0.08	±0.08	±0.08	±0.08

*Ø8 model is available with two motor options: Cored Brushed DC and Cored Brushless DC.

Customization Options

DC Servo Motor

Features

1. Compact size ideal for tight spaces
2. Optimized rotor and pole pairs design reduces cogging torque for smoother motion
3. Segmented stator improves heat dissipation and reduces eddy current loss; vacuum epoxy potting enhances insulation
4. High-resolution encoder enables precise control and retains position after power loss

Specification

Motor model	Unit	25SW11-x	25SW22-x	25SW33-x
Pole pairs	-	5	5	5
Rated voltage	V	48	48	48
Rated power	W	11	22	33
Rated torque	mN.m	35	70	105
Peak torque	mN.m	105	210	315
Rated speed	RPM	3000	3000	3000
Max speed	RPM	6000	6000	6000
Rated current	A	2	2	2
Peak current	A	6	6	6
Phase-to-phase resistance	Ω	1.4	2.4	3.4
Phase-to-phase inductance	mH	0.30	0.51	0.72
Back EMF constant	Vrms/krpm	1.15	2.3	3.45
Torque constant	mN.m/A	17.5	35	52.5
Rotor inertia	g·cm²	2.8	4.8	6.8
Protection class	-	IP54	IP54	IP54
Motor length (L)	mm	51.5	62.5	73.5

Outer Rotor Motor

Features

1. Compact size ideal for tight spaces
2. Compact design with high output torque using high-performance magnetic materials
3. Wide speed range and stable low-speed operation with multi-slot stator
4. Outer rotor design reduces cogging torque, noise, and vibration

Specification

Motor model	/	20ZWCO14L-1	42ZWCO32L-001
Pole pairs	/	4	7
Rated voltage	V	12	18
No-load speed	RPM	9380	3800
No-load current	A	0.051	0.3
Rated power	W	4.1	63.5
Rated torque	mN.m	7.59	220
Rated speed	RPM	5170	2760
Rated current	A	0.655	4.6
Phase-to-phase resistance	Ω	7.45	0.51
Phase-to-phase inductance	mH	0.754	0.28
Back EMF constant	Vrms/krpm	0.88	3.3
Torque constant	mN.m/A	11.8	48.7
Rotor inertia	g·cm²	5.1	175
Protection class	/	IP20	IP20

Customization Options

IP54 Rating Protection Solution

1. Epoxy resin Primer coating and blue polyurethane finish with thickness of 0.1 – 0.15 mm
2. Coated surface can withstand up to 48 hours of salt spray
3. Wiring connections use industrial threaded connector, capable of anti-vibration and anti-squeezing, obtaining protection class of IP 54

DLG/DRS Electric Slide Ball Screw Linear Actuator

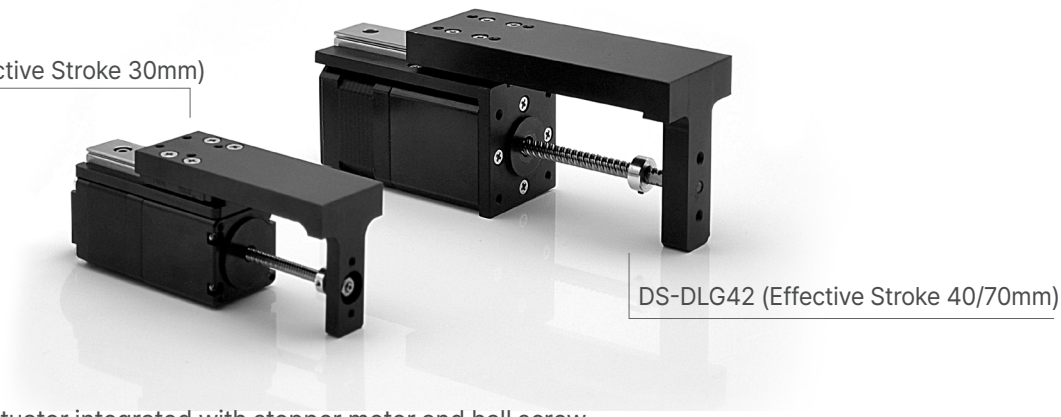

1. Compact linear actuator integrated with stepper motor and ball screw
2. Direct integration structure without coupling, higher efficiency and precision
3. It enables equipment design compact and reduce the number of parts and assembly process
4. Compared with trapezoidal screw type, it can achieve high precision, bigger thrust and longer life cycle

Dimensional Drawings

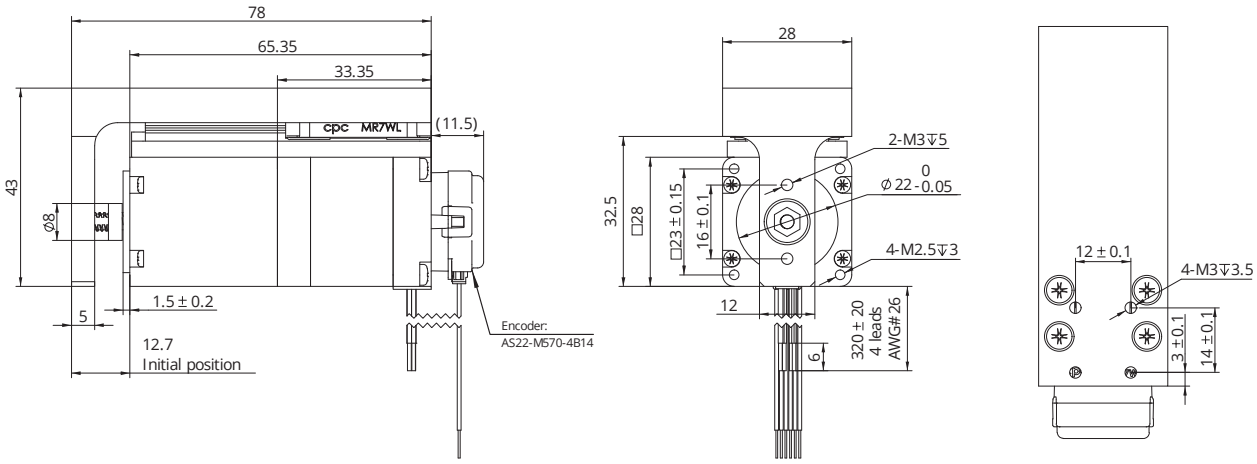

DS-DLG 28

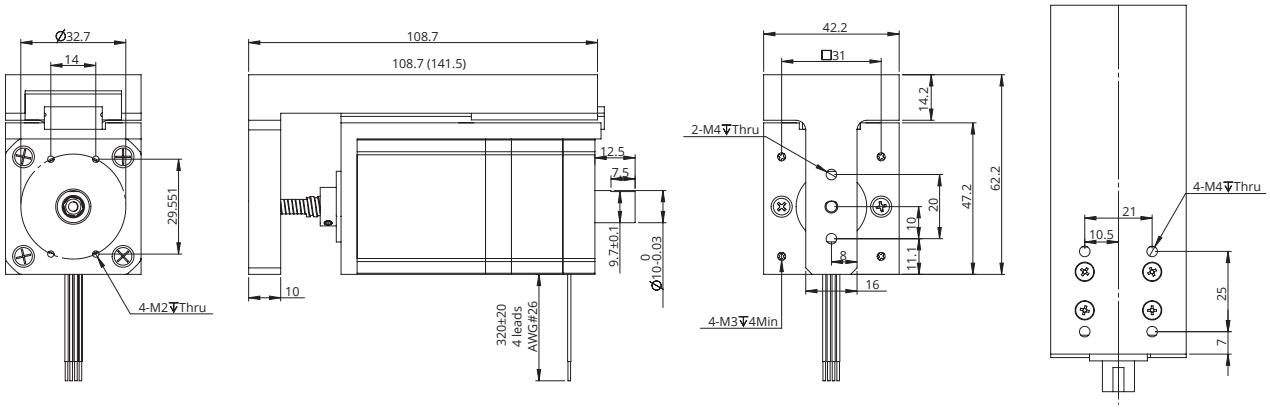

DS-DLG 42

Customization Options

Brushless DC Blower Motor

1. Potentiometer speed control
2. Analog speed command signal. Fan speed is proportional to the analog command signal, and the range of the command signal is 0 - 5 V
3. Digital speed command signal (PWM). Fan speed is proportional to the PWM duty cycle signal, the command signal is 5V, 200Hz, the adjustment range is 10% - 90%, and it stops when it is lower than 10%.
4. High wind pressure, high flow rate, low noise, long life, small size, customizable.

Dimensional Drawings

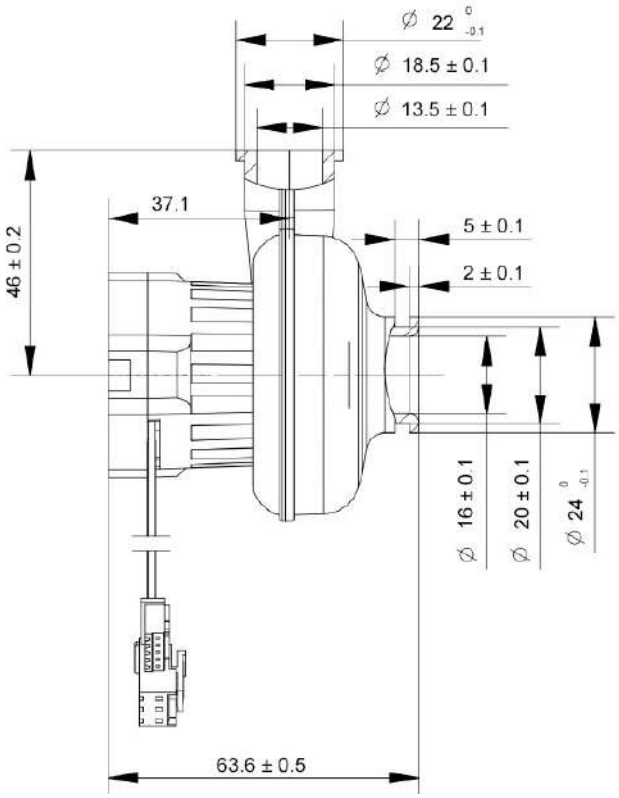

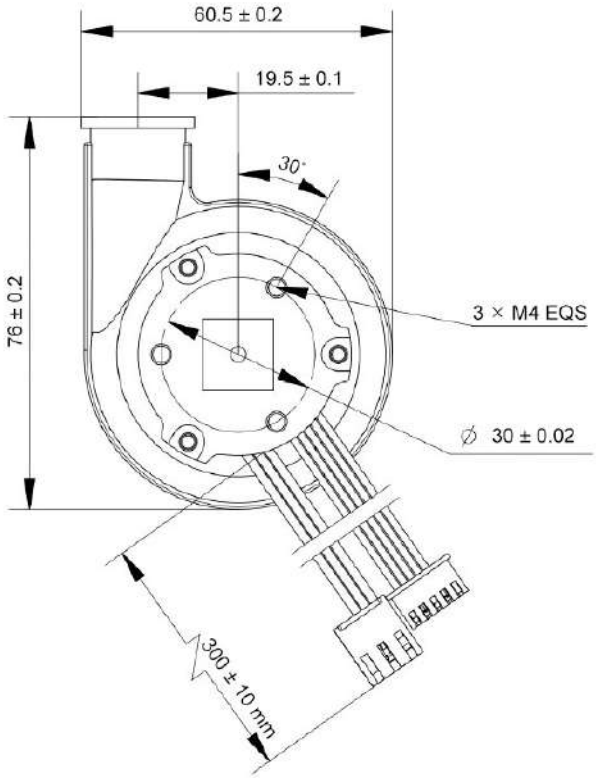

Customization Options

New energy main drive motor

1. Equipped with supporting electronic control, it has strong load and overload capacity, small starting torque and can meet multiple speed regulation requirements
2. DINGS' Established R&D and production line dedicated for permanent magnet synchronous motors with specialized development capabilities
3. Can meet various voltage customization requirements (72V / 96V / 115V / 320V / 350V)

For more information, contact your local DINGS' representative (see the back cover).

DINGS'
Precision Motion Specialist

ENG Web | Partners Web | YouTube

HEADQUARTERS

Jiangsu DINGS' Intelligent Control Technology Co., Ltd.

No. 2850 Luheng Road, Changzhou Economic Development Zone, Jiangsu Province, China

Tel : +86-519-85177825
E-mail : info@dingsmotion.com
Web : dingsmotion.cn

GLOBAL MANUFACTURING LOCATION

DINGS' Intelligent Control Technology (Thailand) Co., Ltd.

42/29 Moo 4, Uthai Subdistrict, Uthai District, Phra Nakhon Si Ayutthaya 13210, Thailand

Tel : +66 64-505-9951

SUBSIDIARIES

DINGS' Motion USA

355 Cochrane Circle Morgan Hill, CA 95037

+1-408-612-4970
sales@dingsmotionusa.com
dingsmotionusa.com

DINGS' Motion Europe

4 Avenue du Grand Trémoutier
44120 Vertou, France

+33-(0)6-41-37-80-07
sebastien@dingsmotion.com
fr.dingsmotion.com

DINGS' Korea Co., Ltd.

C-702, 158 Haneulmaeul-ro, Ilsandong-gu, Goyang-si, Republic of Korea

+82-31-994-0755
daniel@dingsmotion.com
dingsmotion.kr / dkps.co.kr / en.dkps.co.kr

INTERNATIONAL OFFICES

DINGS' Shenzhen Office

Room 1105, Block C, CIMC Industry Park, Guangming District, Shenzhen, China

info@dingsmotion.com

DINGS' Motion Europe - Austria

Wilhelm-Weber-Weg 1/1/17,
1110 Vienna, Austria

+43-676-349-77-85
dusan@dingsmotion.com
dingsmotion.com

DINGS' Japan

101, 2-27-18, Nishi-kojiya, Ota-ku,
Tokyo 144-0034, Japan

+81-90-7730-0034
tsukahara@dingsmotion.com
jp.dingsmotion.com

Rev. 2026.09

© DINGS'. All rights reserved

No part of this catalog may be reproduced or distributed without prior written consent from DINGS'.
Specifications, features, and designs are subject to change without prior notice for product improvement.
DINGS' reserves the right of final interpretation of this catalog and its products.