REVISION			
REV.	DATE	DESCRIPTION	DRAWN BY

CE RoHS
11E2110BS14-100
DINGS' MOTION
Work order
DATE REV00

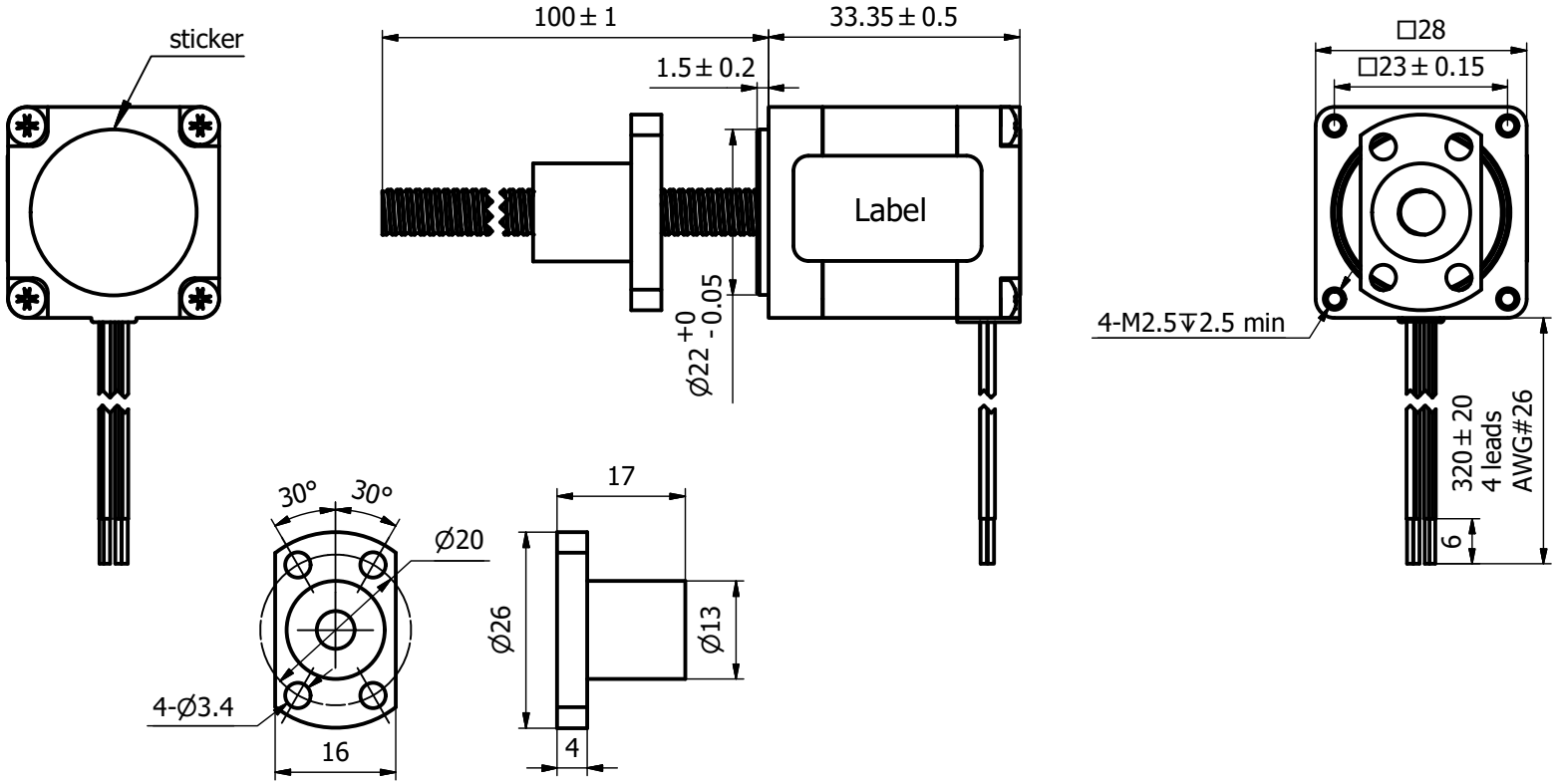

Motor's phase	2
Step angle	1.8°
Rated current/phase	1.0 A
Resistance/phase	2.1Ω±10%
Inductance/phase	1.5 mH±20%
Linear travel per step	0.005mm/step
Ball screw diameter	Φ6.0mm
Ball screw lead	1.0mm
Grade	C7(KSS)
Insulation class	B
Insulation resistance	100MΩ(500VDC)
Heat rise	80°C
Motor weight	0.12 kg

Notes,
1.To maximize output force and life of linear actuators,
radial load on lead screws should be avoided or be kept at a minimum.

CUSTOMER

WIRING CHART

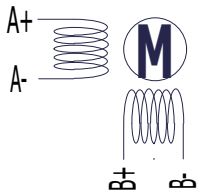

EXCITING SEQUENCE

CW	→			
Red A+	+		-	
Red/wht A-	-		+	
Green B+		+		-
Grn/wht B-		-		+
CCW	←			

NOTICE TO PERSONS RECEIVING THIS DRAWING
THIS DRAWING IS ONLY CONDITIONALLY ISSUED, AND FOR THE SOLE PURPOSE OF INFORMING LICENSEES AND ASSOCIATE CONTRACTORS OF DINGS' MOTION, AND VENDORS THERETO AND CUSTOMERS THEREOF, RECEIPT OR POCESSION THEREOF DOES NOT CONFER TO TRANSFER ANY RIGHT IN THE SUBJECT MATTER OF THE DRAWING. THE DESIGN, CONSTRUCTION, TECHNICAL INFORMATION AND ALL OTHER SUBJECT MATTER SHOWN IN THIS DRAWING ARE AND REMAIN, EXCEPT AS MAY BE OTHERWISE INDICATED BY WRITTEN NOTICE HEREON, THE EXCLUSIVE PROPERTY OF SAID CORPORATION. THIS DRAWING MAY BE REPRODUCED ONLY BY LICENSEES AND ASSOCIATE CONTRACTORS OF SAID CORPORATION AND ONLY FOR LICENSED MANUFACTURE, AND BY VENDORS MANUFACTURING FOR SAID CORPORATION AND ONLY FOR LICENSEES AND ASSOCIATECONTRACTORS.

UNLESS OTHERWISE SPECIFIED ALL DIMENSIONS ARE IN MILLIMETERS AND TOLERANCES ARE AS BELOW PER ISO2768-cK.

LINEAR		ANGULAR	
0～3	±0.2	0～10	±1.5°
3～6	±0.5	10～50	±1°
6～30	±0.8	50～120	±30′
30～120	±1.5	120～400	±15′

DRAWN	Galen	DATE	2022/12/28
APPRVD		DATE	
MODEL	11E2110BS14-100		

DINGS'

SIZE	A3	SHEET	1 OF 1
SCALE	1：1	REV	00