REVISION			
REV	DATE	DESCRIPTION	DRAWN BY

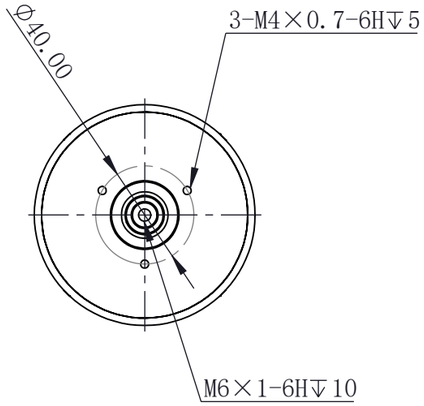

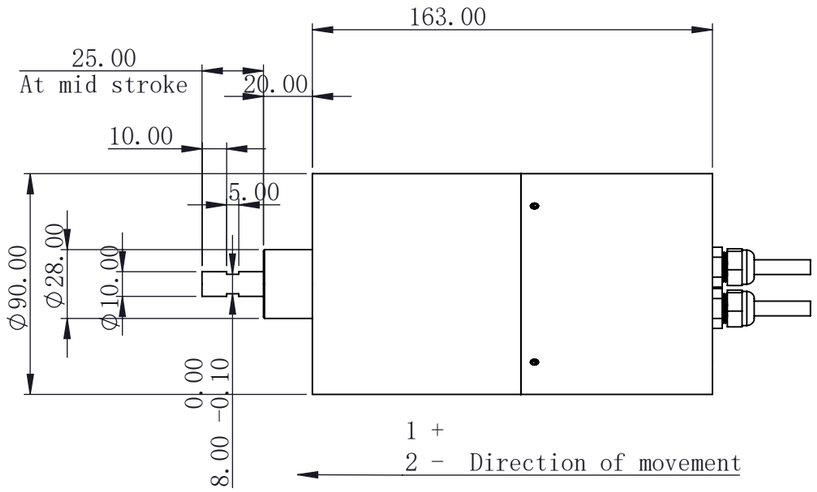

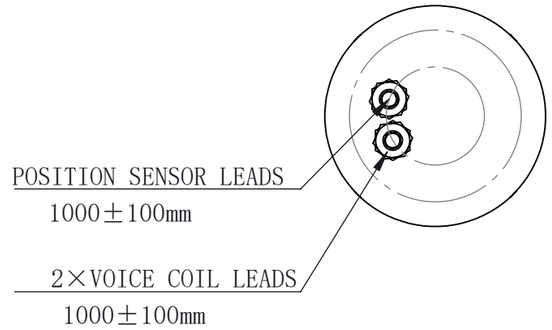

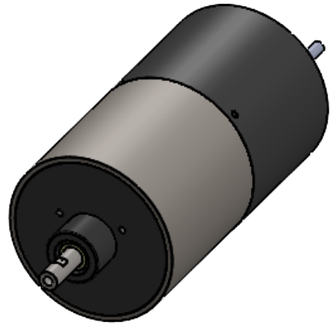

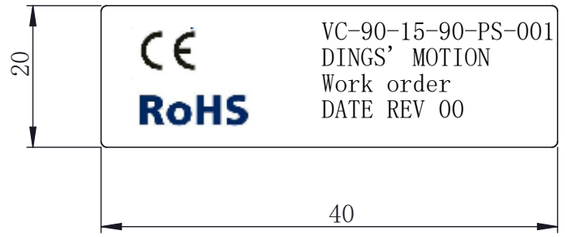

TECHNICAL PARAMETERS

Parameter	Einheit	Werte
Stroke	mm	15
Continuous force	N	(90)
Peak force	N	(340)
Force Constant	N/A	22.5
Back EMF constant	V/m/s	22.5
Resistance	Ω	4Ω±10%
Inductance	mH	TBD
Electrical Time Constant	ms	TBD
Continuous current (coil at 100 ° C)	A	4
Peak Current	A	15
Max coil temperature	℃	155
Coil assembly mass	g	TBD
Magnet weight	g	(1055)
Coil clearance	mm	0.7
Insulation Class		B
Resolution	μm	1

Pin No.	1	2	3	4	5	6	7	8	9	10	11	12
Color	Red/Orange	Black/Transparent	Green	Brown	Gray	Purple	Blue	Yellow	Light Blue	White	Black heat shrink tube	–
Definition	5V	0V	A+	A-	B+	B-	Z+	Z-	RDY (Double Limit-L)	LMT (Double Limit-R	Lnner Shield	Outer shielding

CUSTOMER

WIRING CHART

~~~~~~

EXCITING SEQUENCE

UP	→	
Red +	+	–
Black –	–	+
DOWN	←	

NOTICE TO PERSONS RECEIVING THIS DRAWING
THIS DRAWING IS ONLY CONDITIONALLY ISSUED, AND FOR THE SOLE PURPOSE OF INFORMING LICENSEES AND ASSOCIATE CONTRACTORS OF DINGS' MOTION, AND VENDORS THERETO AND CUSTOMERS THEREOF, RECEIPT OR POCESSION THEREOF DOES NOT CONFER TO TRANSFER ANY RIGHT IN THE SUBJECT MATTER OF THE DRAWING. THE DESIGN, CONSTRUCTION, TECHNICAL INFORMATION AND ALL OTHER SUBJECT MATTER SHOWN IN THIS DRAWING ARE AND REMAIN, EXCEPT AS MAY BE OTHERWISE INDICATED BY WRITTEN NOTICE HEREON, THE EXCLUSIVE PROPERTY OF SAID CORPORATION. THIS DRAWING MAY BE REPRODUCED ONLY BY LICENSEES AND ASSOCIATE CONTRACTORS OF SAID CORPORATION AND ONLY FOR LICENSED MANUFACTURE, AND BY VENDORS MANUFACTURING FOR SAID CORPORATION AND ONLY FOR LICENSEES AND ASSOCIATE CONTRACTORS.

UNLESS OTHERWISE SPECIFIED ALL DIMENSIONS ARE IN MILLIMETERS AND TOLERANCES ARE AS BELOW PER ISO2768-cK.

LINEAR		ANGLUR	
0~3	±0.2	0~10	±1.5°
3~6	±0.5	10~50	±1°
6~30	±0.8	50~120	±30'
30~120	±1.5	120~400	±15'

DRAWN	QHF	*DATE*	20260330
APPRVD		*DATE*	
MODEL	VC-90-15-90-PS-001		
SIZE	A3	*SHEET*	1 OF 1
SCALE	Free	*REV*	00

DINGS'
~~~~~~