REVISION			
REV	DATE	DESCRIPTION	DRAWN BY

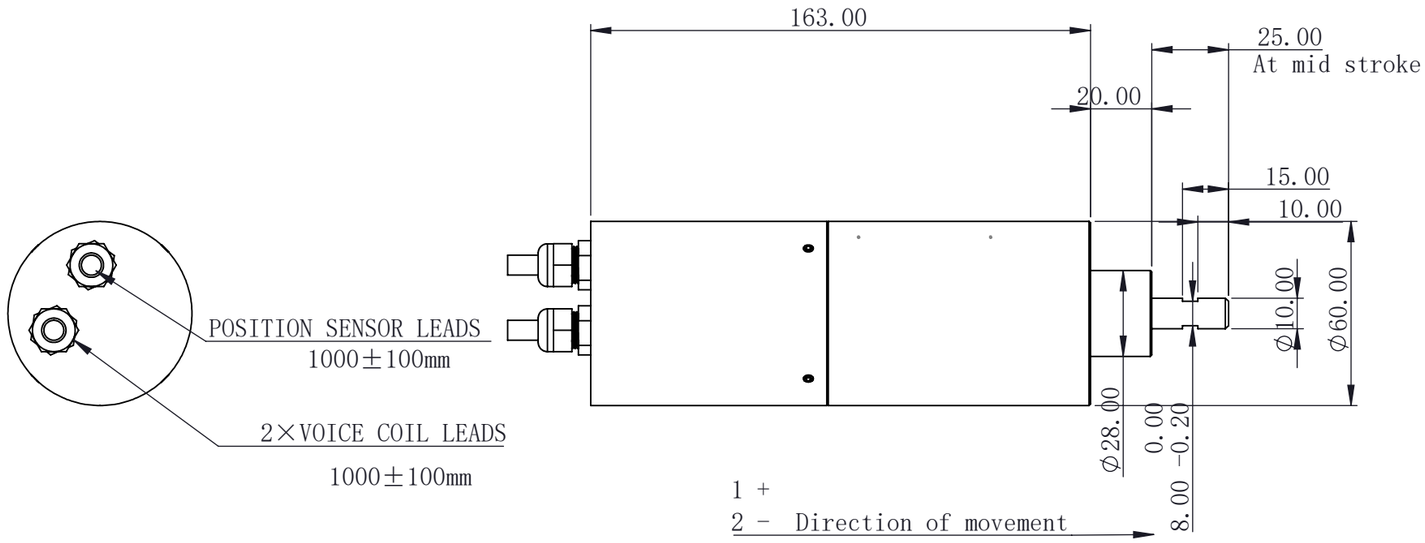

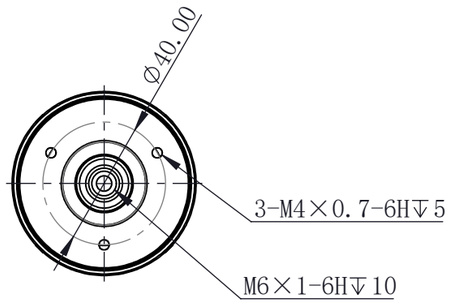

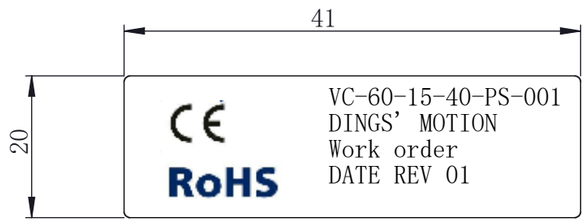

TECHNICAL PARAMETERS

Parameter	Einheit	Werte
Stroke行程	mm	15
Continuous force持续推力	N	(40)
Peak force峰值推力	N	(142)
Force Constant力常数	N/A	20
Back EMF constant反电动势常数	V/m/s	20
Resistance电阻	Ω	6.75Ω±10%
Inductance电感	mH	TBD
Electrical Time Constant电气时间常数	ms	TBD
Continuous current (coil at 100 ° C)持续电流	A	2
Peak Current峰值电流	A	7
Max coil temperature线圈最高温度	℃	155
Coil assembly mass 线圈重量	g	TBD
Magnet weight磁体重量	g	(682)
Coil clearance线圈间隙	mm	0.7
Insulation Class绝缘等级		B
Resolution分辨率	μm	1

Pin No.	1	2	3	4	5	6	7	8	9	10	11	12
Color	Red/Orange	Black/Transparent	Green	Brown	Gray	Purple	Blue	Yellow	Light Blue	White	Black heat shrink tube	-
Definition	5V	0V	A+	A-	B+	B-	Z+	Z-	RDY (Double Limit-L)	LMT (Double Limit-R	Lnner Shield	Outer shielding

CUSTOMER

WIRING CHART

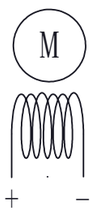

EXCITING SEQUENCE

UP	→	
Red +	+	−
Black −	−	+
DOWN	←	

NOTICE TO PERSONS RECEIVING THIS DRAWING

THIS DRAWING IS ONLY CONDITIONALLY ISSUED, AND FOR THE SOLE PURPOSE OF INFORMING LICENSEES AND ASSOCIATE CONTRACTORS OF DINGS' MOTION, AND VENDORS THERETO AND CUSTOMERS THEREOF, RECEIPT OR POCESSION THEREOF DOES NOT CONFER TO TRANSFER ANY RIGHT IN THE SUBJECT MATTER OF THE DRAWING. THE DESIGN, CONSTRUCTION, TECHNICAL INFORMATION AND ALL OTHER SUBJECT MATTER SHOWN IN THIS DRAWING ARE AND REMAIN, EXCEPT AS MAY BE OTHERWISE INDICATED BY WRITTEN NOTICE HEREON, THE EXCLUSIVE PROPERTY OF SAID CORPORATION. THIS DRAWING MAY BE REPRODUCED ONLY BY LICENSEES AND ASSOCIATE CONTRACTORS OF SAID CORPORATION AND ONLY FOR LICENSED MANUFACTURE, AND BY VENDORS MANUFACTURING FOR SAID CORPORATION AND ONLY FOR LICENSEES AND ASSOCIATE CONTRACTORS.

UNLESS OTHERWISE SPECIFIED ALL DIMENSIONS ARE IN MILLIMETERS AND TOLERANCES ARE AS BELOW PER ISO2768-cK.

LINEAR		ANGLUR	
0~3	±0.2	0~10	±1.5°
3~6	±0.5	10~50	±1°
6~30	±0.8	50~120	±30'
30~120	±1.5	120~400	±15'

DRAWN	QHF	*DATE*	20260330
APPRVD		*DATE*	
MODEL	VC-60-15-40-PS-001		
SIZE	A3	*SHEET*	1 OF 1
SCALE	Free	*REV*	00

DINGS'