70ZWC25X-1

DINGS' MOTION DATE CODE

REV	DATE	DESCRIPTION	BY
00	20241226	ORIGINAL	YAN

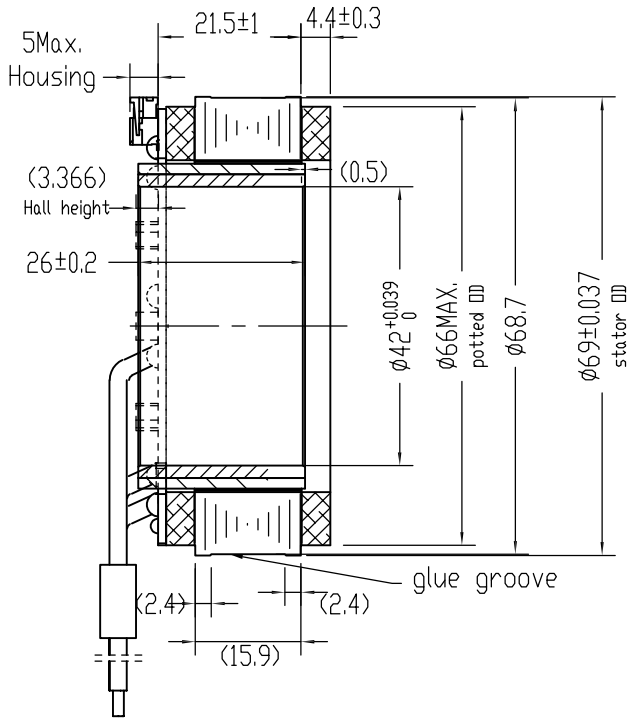

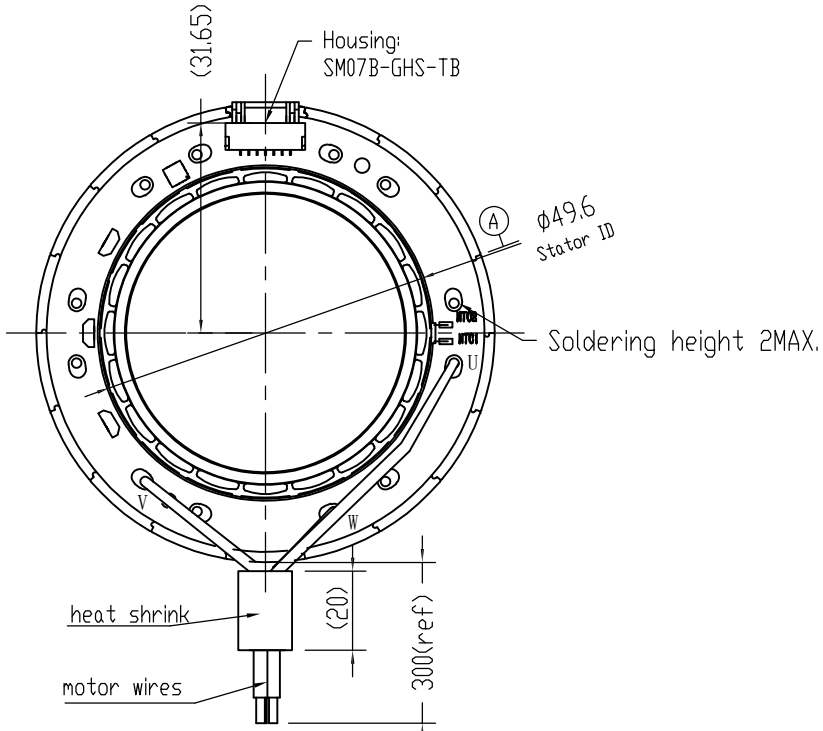

NOTE: 1、The peak torque test is based on motor at ordinary temperature
2、Motor performance data is based on open loop drive,Not closed loop drive

REDUCTION RATIO	-	-	DIELECTRICAL STRENGTH	500V 1s 1mA
POLE PAIRS	-	10	INSULATION RESISTANCE	100MOhm 20C
RATED CURRENT	A	11.4(REF)	MOUNTING TYPE	IM B5 V1 V3
RATED SPEED	RPM	3350(REF)	DUTY TYPE	-
RATED TORQUE	N-m	1.3	COOLING TYPE	IC410
RATED POWER	W	456	PROTECTION GRADE	IP00
RATED VOLTAGE	VDC	48	INSULATION CLASS	F
PEAK TORQUE1	N-m	2.6	WEIGHT OF STATOR	~224g
			WEIGHT OF ROTOR	~90g
			ROTOR INERTIA	~454g.cm²

HALL and NTC Lead wires with housing

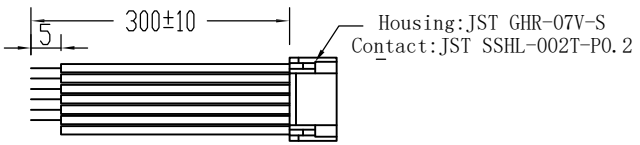

NTC Lead wires		
UL1061 26AWG	NTC2	BRN
	NTC1	YEL

CUSTOMER	Motor Lead wires			Hall Lead wires		
U	UL1332 18AWG	PHASE U	YEL	UL1061 26AWG	+5 VDC	RED
V		PHASE V	RED		HALL U	BLU
W		PHASE W	BLK		HALL V	GRN
					HALL W	WHT
					GND	BLK

THIS DRAWING IS ONLY CONDITIONALLY ISSUED, AND FOR THE SOLE PURPOSE OF INFORMING LICENSEES AND ASSOCIATE CONTRACTORS OF DINGS' MOTION, AND VENDORS THERETO AND CUSTOMERS THEREOF, RECEIPT OR POCESSION THEREOF DOES NOT CONFER TO TRANSFER ANY RIGHT IN THE SUBJECT MATTER OF THE DRAWING. THE DESIGN, CONSTRUCTION, TECHNICAL INFORMATION AND ALL OTHER SUBJECT MATTER IN THIS DRAWING ARE AND REMAIN, EXCEPT AS MAY BE OTHERWISE INDICATED BY WRITTEN NOTICE HEREON, THE EXCLUSIVE PROPERTY OF SAID CORPORATION. THIS DRAWING MAY BE REPRODUCED ONLY BY LICENSEES AND ASSOCIATE CONTRACTORS OF SAID CORPORATION AND ONLY FOR LICENSED MANUFACTURE, AND BY VENDORS MANUFACTURING FOR SAID CORPORATION AND ONLY FOR LICENSEES AND ASSOCIATE CONTRACTORS.

UNLESS OTHERWISE SPECIFIED
ALL DIMENSIONS ARE IN MILLIMETERS
AND TOLERANCES ARE AS BELOW

LINEAR		ANGULAR	
0 - 3	±0.2	0 - 10	±1.5°
3 - 6	±0.5	10 - 50	±1°
6 - 30	±1	50 - 120	±0.5°
30 - 120	±2	120 - 400	±0.25°

DRWN	yan	DATE	20241226
APRV		DATE	

DINGS' 鼎智

70ZWC25X-1

SIZE	A4
SCALE	1:2